City of Marysville

WATER SYSTEM PLAN

Prepared By

RH2 ENGINEERS PLANNERS SCIENTISTS

October 2016
Agency Review Draft

City of Marysville Water System Plan

October 2016

Mayor
Jon Nehring

City Council
Kamille Norton, President

Stephen C. Muller
Jeff Seibert
Michael Stevens
Rob Toyer
Jeff Vaughan
Donna Wright

Public Works Director
Kevin Nielsen, P.E.

City Engineer
Jeff Laycock, P.E.

City of Marysville
1049 State Avenue
Marysville, WA 98270

Prepared by:

RH2 Engineering, Inc.
22722 29th Drive SE, Suite 210
Bothell, WA 98021

Contact: Michele Campbell, P.E.
(425) 951-5394

CERTIFICATION

This Water System Plan for the City of Marysville was prepared under the direction of the following registered professional engineers.

Richard L. Ballard, P.E. 10/19/16

Michele R. Campbell, P.E. 10/19/16

EXECUTIVE SUMMARY

PURPOSE OF THE WATER SYSTEM PLAN ES-1
SUMMARY OF KEY ELEMENTS ES-1
Water Service Area ES-2
Existing Water System ES-2
Past Water Usage ES-4
Future Water Demands and Water Supply ES-5
Water Source and Quality ES-6
Operations and Maintenance ES-7
Water System Evaluation ES-7
Proposed Water System Improvements and Financing Plan ES-8

CHAPTER 1 – INTRODUCTION

WATER SYSTEM OWNERSHIP AND MANAGEMENT 1-1
OVERVIEW OF EXISTING SYSTEM 1-1
AUTHORIZATION AND PURPOSE 1-2
SUMMARY OF WSP CONTENTS 1-3
DEFINITION OF TERMS 1-4
LIST OF ABBREVIATIONS 1-5

CHAPTER 2 – WATER SYSTEM DESCRIPTION

INTRODUCTION 2-1
WATER SERVICE AREA 2-1
History 2-1
Existing Retail Water Service Area 2-1
Future Water Service Area 2-2
Topography 2-2
Geology 2-2
INVENTORY OF EXISTING WATER FACILITIES 2-3
Pressure Zones 2-3
Supply Facilities 2-5
Pump Station Facilities 2-10
Storage Facilities 2-12
Distribution and Transmission System 2-16
Pressure Reducing, Pressure Sustaining, and Flow Control Stations 2-17
Master Meters 2-19
Water System Operation and Control/Telemetry and Supervisory Control System 2-20
Water System Interties 2-20
Historic Facilities 2-21
WATER SERVICE AGREEMENTS 2-21
Water Service Area Agreement 2-21
Joint Operating Agreement (JOA) 2-21
Additional Agreements Related to JOA 2-22
Other Agreements 2-24
SATELLITE SYSTEM MANAGEMENT 2-25
ADJACENT WATER SYSTEMS 2-25
City of Everett 2-28
Tulalip Tribes 2-28
Snohomish County PUD No. 1 2-28
City of Arlington 2-29
Seven Lakes Water Association 2-29

CHAPTER 3 – LAND USE AND POPULATION

INTRODUCTION 3-1
COMPATIBILITY WITH OTHER PLANS 3-1
Introduction 3-1
Growth Management Act 3-1
City of Marysville Comprehensive Plan 3-2
Snohomish County Comprehensive Plan 3-2
North Snohomish County Coordinated Water System Plan 3-3
LAND USE 3-4
POPULATION 3-6
Household Trends 3-6
Existing and Future City Population 3-7
Water System Population 3-9

CHAPTER 4 – WATER DEMANDS

INTRODUCTION 4-1
Certificate of Water Availability 4-1
CURRENT POPULATION AND SERVICE CONNECTIONS 4-1
Water Use Classifications 4-1
Residential Population Served 4-2
EXISTING WATER DEMANDS 4-4
Water Consumption 4-4
Water Supply 4-10
Fire Flow Demand 4-21
FUTURE WATER DEMANDS 4-22
Basis for Projecting Demands 4-22
Demand Forecasts and Conservation 4-22

CHAPTER 5 – POLICIES AND DESIGN CRITERIA

INTRODUCTION 5-1
SUPPLY POLICIES 5-2
Quality Protection 5-2
Cross-Connection Control 5-2
Quantity 5-2
Fire Flow 5-2
Water Use Efficiency 5-2
Regional Participation 5-2
CUSTOMER SERVICE POLICIES 5-3
Duty to Serve 5-3
Water Service and Connection 5-3
Annexations 5-4
Temporary Services 5-4
Emergency Service 5-4
Planning Boundaries 5-4
Satellite System Management 5-4
FACILITY POLICIES 5-4
Minimum Standards 5-4
Pressure 5-5
Velocities 5-5
Storage 5-5
Transmission and Distribution 5-6
Supply and Booster Pump Stations 5-7
Pressure Reducing Stations 5-8
Supervisory Control 5-8
Maintenance 5-8

Reliability 5-9
Vulnerability 5-9
Joint Use 5-10
FINANCIAL POLICIES 5-10
General 5-10
Connection Charges 5-11
ORGANIZATIONAL POLICIES 5-11
Staffing 5-11
Relationship with Other Departments 5-11

CHAPTER 6 – WATER SOURCE AND QUALITY

INTRODUCTION 6-1
EXISTING WATER SOURCES AND TREATMENT 6-1
Water Sources 6-1
Water Treatment 6-4
WATER RIGHTS AND INTERTIES 6-4
Overview 6-4
Existing Water Rights and Interties 6-5
Pending Water Right Applications 6-10
Non-Potable Water Rights Held by the City 6-10
Water Supply Evaluation 6-10
Water Rights Planning 6-13
LONG-TERM WATER SUPPLY PLANNING 6-13
Feasibility of Obtaining New Water Rights 6-14
Feasibility of Transferring Existing Water Rights 6-14
DRINKING WATER REGULATIONS 6-15
Overview 6-15
Existing Regulations 6-15
Future Regulations 6-23
SOURCE WATER QUALITY 6-24
Drinking Water Standards 6-24
Source Monitoring Requirements and Waivers 6-24
Source Monitoring Results 6-25
DISTRIBUTION SYSTEM WATER QUALITY 6-25
Monitoring Requirements and Results 6-25

CHAPTER 7 – WATER SYSTEM ANALYSIS

INTRODUCTION 7-1
PRESSURE ZONES 7-1
SOURCE CAPACITY EVALUATION 7-3
Analysis Criteria 7-3
Source Capacity Analysis Results 7-4
WATER SUPPLY FACILITIES EVALUATION 7-5
Analysis Criteria 7-5
Supply Analysis Results 7-6
Facility Deficiencies 7-10
STORAGE FACILITIES 7-11
Analysis Criteria 7-11
Storage Analysis Results 7-13
Future Storage Analysis 7-14
Facility Deficiencies 7-16
DISTRIBUTION AND TRANSMISSION SYSTEM 7-17
Analysis Criteria 7-17
Hydraulic Model 7-17
Hydraulic Analysis Results 7-20

Deficiencies 7-21
PRESSURE REDUCING STATIONS 7-21
Evaluation and Deficiencies 7-21
TELEMETRY AND SUPERVISORY CONTROL SYSTEM 7-22
Evaluation and Deficiencies 7-22
SYSTEM CAPACITY 7-22
Analysis Criteria 7-22
Capacity Analysis Results 7-23

CHAPTER 8 – OPERATIONS AND MAINTENANCE

INTRODUCTION 8-1
NORMAL OPERATIONS 8-1
City Personnel 8-1
Personnel Responsibilities 8-1
Certification of Personnel 8-2
Available Chemicals and Equipment 8-4
Routine Operations 8-5
Continuity of Service 8-5
Routine Water Quality Sampling 8-5
Cross-connection Control 8-5
Recordkeeping and Reporting 8-6
Operations and Maintenance Records 8-8
Safety Procedures and Equipment 8-8
EMERGENCY OPERATIONS 8-11
Capabilities 8-11
Emergency Response Plan and Vulnerability Assessment 8-12
Public Notification 8-12
PREVENTIVE MAINTENANCE 8-13
Sunnyside Reservoir/Well 8-13
Highway 9 Reservoir 8-13
Cedarcrest Reservoir 8-13
former Kellogg Marsh site 8-13
Getchell Reservoir 8-14
Wade Road Reservoir 8-14
Stillaguamish River WTP 8-14
Stillaguamish River WTP Clearwell 8-17
327 Zone Reservoir 8-17
Edward Springs Reservoir, Springs, Wells, Treatment Plant 8-17
Lake Goodwin Well 8-18
JOA 30-inch Line 8-18
JOA 24-inch Line 8-18
Stillaguamish Transmission Line 8-19
Other Components of Distribution System 8-19
Meters 8-19
STAFFING 8-21
Current Staff 8-21
Recommended Staff Level 8-21

CHAPTER 9 – WATER SYSTEM IMPROVEMENTS

INTRODUCTION 9-1
DESCRIPTION OF IMPROVEMENTS 9-1
Recent Water System Improvements 9-2
Water Main Improvements 9-2
Pressure Zone Improvements 9-8
Facility Improvements 9-10

Miscellaneous Improvements 9-14
ESTIMATING COSTS OF IMPROVEMENTS 9-15
PRIORITIZING IMPROVEMENTS 9-16
Water Main Improvements 9-16
Other Improvements 9-38
SCHEDULE OF IMPROVEMENTS 9-38
Future Project Cost Adjustments 9-38

CHAPTER 10 – FINANCIAL ANALYSIS

INTRODUCTION 10-1
PAST FINANCIAL HISTORY 10-1
DEVELOPMENT OF THE FINANCIAL PLAN 10-2
Revenue 10-2
Expenses 10-3
External Sources of Funds for Capital Projects 10-5
Internal Sources of Funding for Capital Projects 10-8
SUMMARY OF THE FINANCIAL PROJECTIONS 10-8
RESERVE LEVELS 10-10
REVIEW OF THE EXISTING WATER RATES 10-10
OVERVIEW OF FUTURE WATER RATES 10-12
SUMMARY 10-13

TABLES

Table ES-1 Supply Facilities Summary ES-3
Table ES-2 Storage Facilities Summary ES-3
Table ES-3 Booster Pump Station Facilities Summary ES-4
Table ES-4 Water Main Diameter Inventory ES-4
Table ES-5 Historical Water Supply and System Demand ES-5
Table 1-1 Water System Ownership Information 1-1
Table 1-2 2014 Water System Data 1-2
Table 1-3 Abbreviations 1-6
Table 2-1 Storage Facilities Summary 2-6
Table 2-2 Booster Pump Station Facilities Summary 2-11
Table 2-3 Storage Facilities Summary 2-12
Table 2-4 Water Main Diameter Inventory 2-16
Table 2-5 Water Main Material Inventory 2-16
Table 2-6 Water Main Installation Year Inventory 2-17
Table 2-7 Pressure Reducing, Pressure Sustaining, and Flow Control Station Summary 2-19
Table 2-8 Cuurent Capacity Rights for the JOA Pipeline 2-22
Table 2-9 Adjacent Systems 2-26
Table 3-1 Population Trends within the City Limits 3-7
Table 3-2 Population Projections for the City Limits and Unincorporated UGA and Water System 3-8
Table 3-3 Estimated 2014 Water System Population 3-10
Table 4-1 Average Annual Metered Consumption and Service Connections 4-3
Table 4-2 Multi-family Units 4-4
Table 4-3 Largest Water Users 4-6
Table 4-4 Annual Wheeled Consumption by Purveyor 4-10
Table 4-5 Historical Water Supply 4-11
Table 4-6 Distribution System Leakage 4-14
Table 4-7 Historical Average Daily Demand 4-15
Table 4-8 Existing Per Capita Demand 4-15
Table 4-9 Future per Capita Demand Projection 4-16
Table 4-10 2014 Demands by Pressure Zone 4-17
Table 4-11A Equivalent Residential Units 4-18
Table 4-11B Equivalent Residential Units – Continued 4-19

Table 4-12 Maximum Day Demands and Peaking Factors 4-20
Table 4-13 General Planning-level Fire Flow Requirements....4-22
Table 4-14 Future Water Demand Projections....4-23
Table 4-15 Future ERU Projections 4-24
Table 6-1 Current Allocation from the JOA Supply Line 6-4
Table 6-2 Existing Water Rights and Intertie....6-6
Table 6-3 Instantaneous Rate Divided Between Municipal Supply and Mitigation for SWC 184 6-7
Table 6-4 Existing Water Rights Evaluation 6-11
Table 6-5 Future Water Rights Evaluation 6-12
Table 7-1 Minimum and Maximum Distribution System Static Pressures 7-2
Table 7-2 Water Source Capacity Evaluation....7-4
Table 7-3 Operating Area A Supply Evaluation 7-7
Table 7-4 Operating Area B Supply Evaluation 7-8
Table 7-5 Operating Area C Supply Evaluation 7-9
Table 7-6 Operating Area D Supply Evaluation....7-10
Table 7-7 Existing Storage Evaluation 7-13
Table 7-8A Year 2022 Future Storage Projections....7-14
Table 7-8B Year 2026 Future Storage Projections....7-15
Table 7-8C Year 2036 Future Storage Projections....7-16
Table 7-9 Hydraulic Analyses Operational Conditions 7-19
Table 7-10 Existing System Capacity Analysis....7-24
Table 7-11 Year 2022 System Capacity Analysis with Proposed Improvements 7-26
Table 7-12 Year 2026 System Capacity Analysis with Proposed Improvements 7-28
Table 7-13 Year 2036 System Capacity Analysis with Proposed Improvements 7-30
Table 8-1 Personnel Certification....8-3
Table 8-2 Stillaguamish River Water Treatment Plant Chemicals....8-4
Table 8-3 Annual Available Hours per Person 8-22
Table 8-4 Preventive Maintenance Staff Needed 8-22
Table 8-5 Operations Staff Needed 8-23
Table 8-6 Total Staffing Recommendation 8-23
Table 9-1 Major Improvements Completed Since 2009 WSP 9-2
Table 9-2 Water Main Unit Costs 9-16
Table 9-3 Water Main Improvements Priority Ranking Criteria 9-17
Table 9-4 Annual Water Main Replacement Projects....9-18
Table 9-5 High Priority Annual Water Main Replacement Projects....9-35
Table 9-6 Proposed Improvements Implementation Schedule 9-39
Table 10-1 Water System Financial History 10-1
Table 10-2 Projected Six-Year Revenues ($000s) 10-3
Table 10-3 Projected Capital Improvement Needs ($000s) 10-5
Table 10-4 Funding Agency Contacts 10-6
Table 10-5 Projected Six-Year Financial Plan ($000s)....10-9
Table 10-6 2016 Bi-Monthly Retail Water Rates 10-11
Table 10-6A 2016 Bi-Monthly Retail Water Rates 10-11
Table 10-7 Projected Six-Year Financial Plan ($000s) 10-13

CHARTS

Chart ES-1 Future Water Demands and Water Supply....ES-6
Chart 3-1 Land Use Inside City Limits....3-4
Chart 3-2 Land Use Inside UGA (Outside City Limits) 3-5
Chart 3-3 Land Use Inside Water Service Area (Outside City Limits and UGA) 3-6
Chart 3-4 Population Projections....3-9
Chart 4-1 2014 Water Connections by Customer Class....4-5
Chart 4-2 2014 Water Consumption by Customer Class....4-5
Chart 4-3 Historical Bi-monthly Single-family Consumption....4-7
Chart 4-4 Historical Bi-monthly Multi-family Consumption....4-7

Chart 4-5 Historical Bi-monthly Commercial/Other Consumption 4-8
Chart 4-6 Historical Monthly Wheeled Consumption....4-8
Chart 4-7 Average Monthly or Bi-monthly Peaking Factors by Customer Class 4-9
Chart 4-8 Historical Monthly Water Supply....4-11
Chart 4-9 2014 Monthly Water Supply by Source....4-12
Chart 4-10 Annual Water Supply by Source....4-13
Chart 4-11 Future Water Demand and ERU Projections....4-24
Chart 7-1 Future Water Supply and Demand Projections 7-5

FIGURES

Figure 2-1 Existing Water System
Figure 2-2 Existing System Hydraulic Profile
Figure 2-3 Service Area and Adjacent Systems
Figure 3-1 Land Use
Figure 3-2 Critical Areas
Figure 7-1 Available Fire Flow
Figure 7-2 Existing Pressure
Figure 8-1 Public Works Organizational Chart
Figure 9-1a Proposed Water System Improvements
Figure 9-1b Proposed Water System Improvements
Figure 9-2 Proposed Improvements Hydraulic Profile
Appendix P, Figure A Node Diagram – North
Appendix P, Figure B Node Diagram – South

APPENDICES

Appendix A – Water Facilities Inventory (WFI) Form
Appendix B – Retail Water Service Area Agreements
Appendix C – Agreements with Other Systems
Appendix D – Consistency Plan for Water Supply Disruptions
Appendix E – Consistency Statement Checklists
Appendix F – SEPA Checklist
Appendix G – Water Use Efficiency Program
Appendix H – Cross-connection Control Program
Appendix I – Water System Construction Standards
Appendix J – Water Rights Information
Appendix K – Water Quality Monitoring Plan
Appendix L – Watershed Control Plan
Appendix M – Wellhead Protection Program
Appendix N – Consumer Confidence Report
Appendix O – IDSE Report
Appendix P – Hydraulic Model Node Diagram
Appendix Q – DOH Notices
Appendix R – Water Ordinances
Appendix S – Drought Response Plan
Appendix T – Agency Review Comments

ES | EXECUTIVE SUMMARY

PURPOSE OF THE WATER SYSTEM PLAN

The City of Marysville's (City) water system is a major infrastructure, much of which is invisible to the customers that receive its water. The water system requires qualified staff to operate and maintain an ongoing capital improvement program to replace old components to meet the requirements mandated by federal and state laws. The primary purpose of the City of Marysville Water System Plan (WSP) is to identify and schedule water system improvements that correct existing system deficiencies and ensure a safe and reliable supply of water to current and future customers. This WSP complies with Washington State Department of Health (DOH) regulations under Chapter 246-290 Washington Administrative Code (WAC), which requires water purveyors to update their water system plans every 6 years. In anticipation of the proposed changes to the water system planning requirements to extend the planning horizon to 10 years, this WSP was prepared to serve as a 6-year and 10-year document.

The City's previous WSP was prepared in June 2009. This updated 2016 WSP reflects Snohomish County's (County) 2035 population allocation to the City and the City's current Urban Growth Area (UGA), which are consistent with the City and County 2015 *Comprehensive Plan* updates. The WSP also reflects improvements and changes to the water system since the completion of the 2009 WSP.

SUMMARY OF KEY ELEMENTS

This WSP presents a description of the existing water system and service area, a forecast of future water demands, policies and design criteria for water system operation and improvements, the operations and maintenance program, staffing requirements, a schedule of improvements, and a financial plan to accomplish the improvements. The WSP also includes several ancillary elements that include a water use efficiency plan, a water quality monitoring plan, a wellhead protection plan, a watershed control plan, and a cross-connection control program. A summary of the key issues related to these elements is provided in the following sections.

WATER SERVICE AREA

The City provides water service to approximately 66,686 people throughout its water service area boundary, which extends beyond the City's corporate limits. The City is responsible for providing public water service, utility management, and water system development within this area. The City will provide new water service within the City limits and where there are existing water mains (i.e., the retail water service area). Requests for new water service outside of the City limits but within the UGA, where there are no existing water mains fronting the property, will only be granted after the area is annexed to the City or upon completion of an annexation agreement.

In 2014, the City provided water service to an average of 20,376 connections, which were mainly comprised of single-family connections. Single-family connections represent approximately 90 percent of all accounts, but the single-family class only consumed 43 percent of all water supplied to the system in 2014. The City's two wheeled connections, the Tulalip Tribes and the Snohomish County PUD, accounted for 28 percent of consumption.

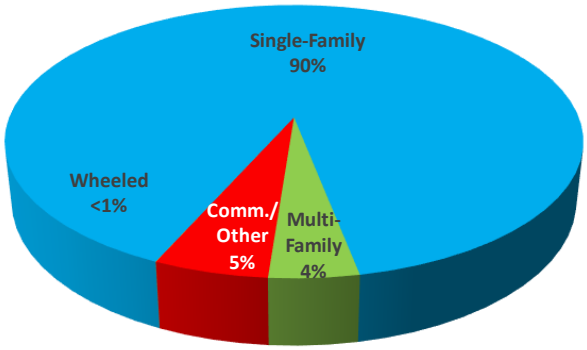

2014 Water Connections

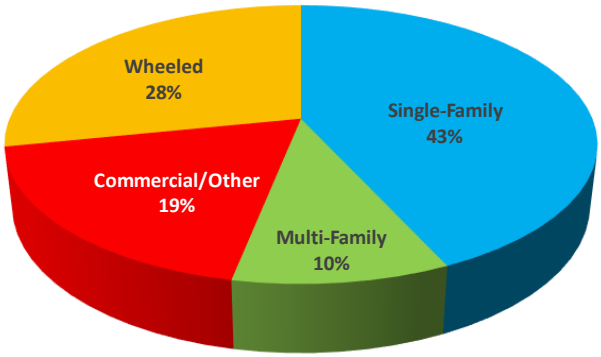

2014 Water Consumption

EXISTING WATER SYSTEM

The City's water system was initially established in the 1930s. Edward Springs was the first source for the system. The Edward Springs water right was originally limited to 0.5 million gallons per day (MGD), but has been increased to 3.2 MGD. The Sunnyside Wells began supplying the system in the 1950s and 1960s. The Lake Goodwin Well was constructed and began supplying the system in 1970, and the Stillaguamish River Ranney Well was constructed and began supplying the system in 1978. The Highway 9 Well was constructed and entered service in 1981, but is currently offline due to water quality concerns. The Stillaguamish River Ranney Well and the Edward Springs source were designated groundwater under the influence of surface water (GWI) sources in 2000. In response, the Edward Springs treatment plant was constructed in 2004 and the Stillaguamish River Water Treatment Plant (WTP) was constructed in 2006. A new treatment facility for the Sunnyside Wells is currently under construction and is anticipated to be online in 2017. A summary of the City's sources is shown in **Table ES-1**.

Table ES-1
Supply Facilities Summary

Well	Pressure Zone	Year Installed	Use	Existing Pumping Capacity (gpm)	Well Depth (feet)	Well Diameter (inches)	Pump Type	Pump Motor Size (hp)	Water Treatment
Stillaguamish Ranney Well Collector	240 Zone	1978	Active	2,250	n/a	n/a	(2) Submersible	(2) 100	Membrane, Chlorine
Edward Springs Spring Source	240 Zone	1930s	Active	760	n/a	n/a	Centrifugal	(2) 3	Chlorine, UV
Edward Springs Well No. 1R	240 Zone	2008	Active	170	182	12	Submersible	15	Chlorine
Edward Springs Well No. 2	240 Zone	Prior to 1960[1]	Active	225	150	unknown	Submersible	15	Chlorine
Edward Springs Well No. 3	240 Zone	1987 [1]	Active	300	181	unknown	Submersible	25	Chlorine
Lake Goodwin Well	460 Zone	1970	Active	350	450	unknown	Vertical Turbine	50	Chlorine
Highway 9 Well	510 Zone	1981	Offline[2]	n/a	270	unknown	n/a	n/a	n/a
Sunnyside Well No. 1R	360 Zone	2009	Offline[2]	n/a	278	16	n/a	n/a	n/a
Sunnyside Well No. 2	360 Zone	1965	Offline[2]	n/a	328	16	Vertical Turbine	100	n/a

1 = Rehabilitated in 2004.
2 = Currently offline for water quality purposes.

The City's water system has nine storage facilities that provide storage directly to the 510 Zone, 460 Zone, 360 Zone, 327 Zone, 240 Zone, 170 Zone, and Stillaguamish Zone. Details of the City's storage facilities are shown in **Table ES-2**.

Table ES-2
Storage Facilities Summary

Reservoir	Approximate Location	Pressure Zone	Year Constructed	Material	Capacity (MG)	Diameter (feet)	Base Elev. (feet)	Overflow Elev. (feet)
Edward Springs Reservoir	614 Lakewood Rd	240 Zone	1975	PVC-lined embankment	6.0	Irregular	223	239.4
Stillaguamish River WTP Clearwell	17906 43rd Ave NE	Stillaguamish	2006	Steel	0.2	39.0	130	152.5
Wade Road Reservoir	7011 Wade Rd	240 Zone	2007	Steel	3.0	120.6	204	239.4
327 Zone Reservoir	614 Lakewood Rd	327 Zone	2008	Welded Steel	0.7	66.0	296	329
Getchell Reservoir	8210 98th Place NE	360 Zone	1995	Pre-stressed Concrete	6.0	182.0	328	360
Cedarcrest Reservoir	7300 71st Ave NE	170 Zone	1987	Pre-stressed Concrete	3.5	150.0	146.2	170.5
Highway 9 Reservoir	8812 64th St NE	510 Zone	1998	Steel	1.8	77.0	457.5	510
Sunnyside Reservoir	4021 71st Ave NE	360 Zone	2008	Welded Steel	3.0	89.0	296	360
Lake Goodwin Standpipe	3914 176th St NW	460 Zone	unknown	Corrugated Metal Pipe	0.003	4.0	427	459

The City's water system has three booster pump station facilities that provide supply to the 240, 460, and 510 Zones, respectively, as shown in **Table ES-3**.

Table ES-3
Booster Pump Station Facilities Summary

Pump Station	Suction Pressure Zone	Discharge Pressure Zone	Year Constructed	Existing Pumping Capacity	Number of Pumps	Pump Type	Pump Motor Size (hp)
Edward Springs BPS	240 Zone	460 Zone	2001	3,500	2	Vertical Turbine	2 (75)
Cedarcrest BPS	170 Zone	510 Zone	1987	2,400	3	Submersible	3 (150)
Stillaguamish WTP BPS	Stillaguamish	240 Zone	2006	2,200	3	Centrifugal	3 (50)

The City's water system contains more than 297 miles of water main ranging in size from 2 inches to 24 inches. As shown in **Table ES-4**, most of the water main (approximately 73 percent) within the system is 8 inches in diameter or less. The remaining 27 percent of the water main is 10 inches in diameter or larger.

Table ES-4
Water Main Diameter Inventory

Diameter (Inches)	Length (Feet)	% of Total
4 or smaller	69,128	4.4%
6	423,314	26.9%
8	659,505	42.0%
10	62,073	4.0%
12	259,115	16.5%
14	15,344	1.0%
16	29,834	1.9%
18	42,740	2.7%
20	11	0.0%
24	10,269	0.7%
Totals	**1,571,333**	**100%**

PAST WATER USAGE

In general, the amount of water consumed by the City's customers and other authorized uses remained relatively steady from 2007 until approximately 2014. This was most likely the result of water use efficiency practices, including new buildings with low flow plumbing fixtures, and the repair of water system leaks.

Typically, the average day demand (ADD) for each year would be calculated from the City's annual supply totals. However, the City's metered customer demands are higher than the City's supply totals. As a result, the ADD is calculated as the total annual customer demands plus any other known authorized consumption in terms of gallons per minute (gpm). **Table ES-5** lists the annual consumption totals and the average day demand.

Table ES-5
Historical Water Supply and System Demand

Year	Annual Consumption (gallons)[1]	Average Day Demand (gpm)[1]
2007	2,294,160,000	4,365
2008	2,459,716,000	4,667
2009	2,275,584,000	4,329
2010	2,283,860,000	4,345
2011	2,333,554,384	4,440
2012	2,349,325,256	4,458
2013	2,451,092,426	4,663
2014	2,462,419,872	4,685

NOTES:
1. Annual Consumption and ADD include authorized non-revenue water consumption.

FUTURE WATER DEMANDS AND WATER SUPPLY

Overall water demand within the City's system is expected to increase by approximately 140 percent of 2014 demand by the end of the 20-year planning period. With the Sunnyside Wells online, the City will have sufficient water supply from its supply sources to meet the demand requirements of the system until at least 2036, as shown in **Chart ES-1**.

Chart ES-1
Future Water Demands and Water Supply

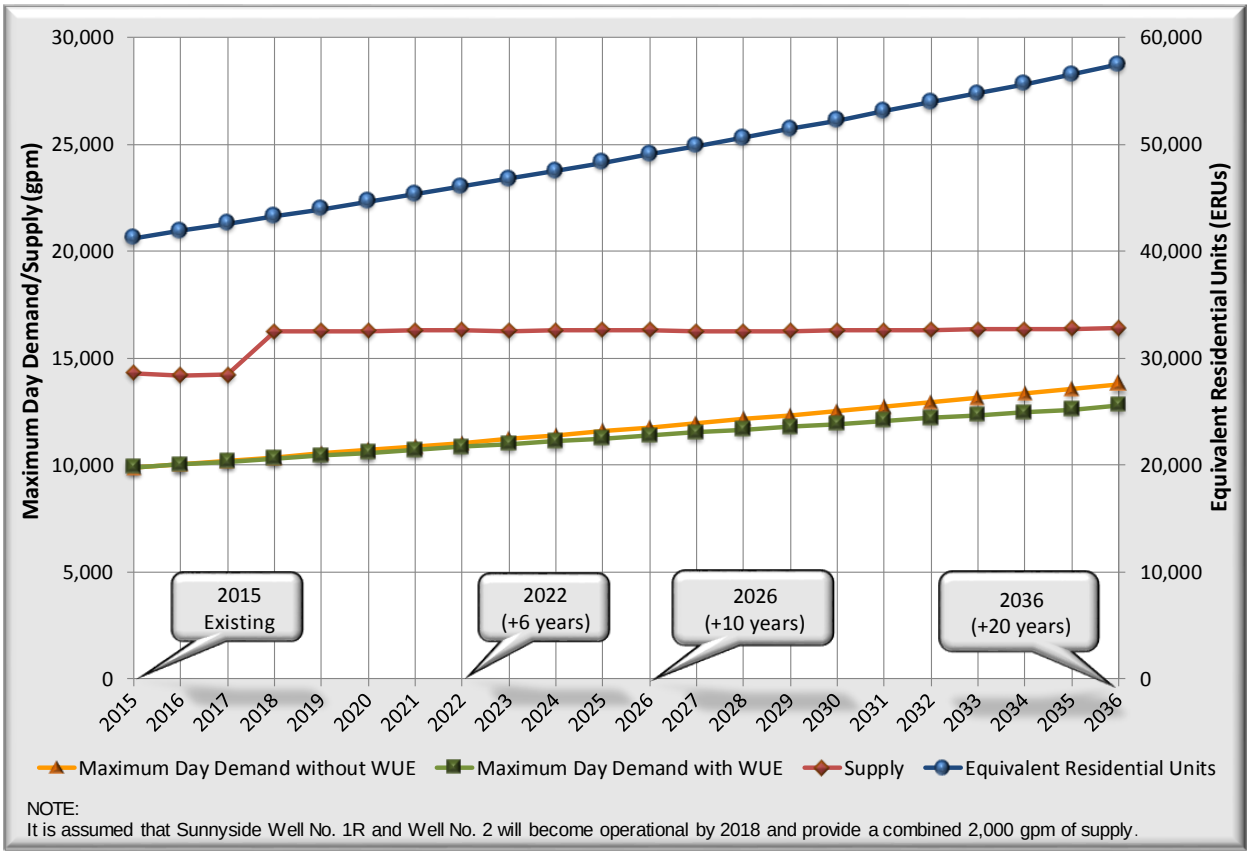

WATER SOURCE AND QUALITY

The City's municipal water supply is provided by surface water diverted from Edward Springs and groundwater pumped from the Edward Springs Wells, the Stillaguamish River, the Sunnyside Well site, and the Lake Goodwin Well. Water is also delivered from the City of Everett through the Joint Operating Agreement (JOA) supply line. The Highway 9 Well is not currently online.

Water from the Stillaguamish River is treated by membrane filtration and chlorine at the Stillaguamish River WTP. The Edward Springs sources are all treated with chlorine and the surface water is additionally treated with ultraviolet disinfection. The Lake Goodwin Well is treated with chlorine. When the Sunnyside Well Water Treatment Facility is brought online in 2017, it will provide on-site sodium hypochlorite generation and an oxidation/filtration treatment process to remove iron and manganese from Sunnyside Well Nos. 1R and 2.

Groundwater is often fluoridated to assist in the prevention of tooth decay. Water received from Everett is fluoridated while the City's other sources are not; therefore, customers may receive water that is fluoridated, non-fluoridated, or only partially fluoridated depending on water system operating conditions.

OPERATIONS AND MAINTENANCE

The City's operations and maintenance organization is staffed by well qualified, technically trained personnel. City staff regularly participate in safety and training programs to keep abreast of the latest changes in the water industry and ensure a smooth and safe operation of the water system. The current staff of supervisory personnel and field crew, in which many are responsible for the water system and other utilities, have effectively operated and maintained the water system in the past. However, to optimize the preventative maintenance program and operations of the water system, additional personnel are recommended. As the water system expands in the future and continues to age, additional staff will also be required. The City plans to add staff to meet the increased requirements from system expansion as the budget allows.

The City has taken several steps to prepare for emergency situations. Vulnerability Assessment and Emergency Response Plans have been prepared that conform to the requirements of the Bioterrorism Act of 2002. The documents contain a vulnerability assessment of the City's water system facilities, a contingency operation plan for responding to emergency events, a list of water personnel responsible for making decisions in emergency situations, and other elements.

WATER SYSTEM EVALUATION

The existing water system was evaluated to determine its ability to meet the policies and design criteria of the City and those mandated by DOH. The results of the evaluation are summarized below.

- The City has sufficient water supply to meet the demands of existing and future customers until at least 2036 once the Sunnyside Well Water Treatment Facility is online in 2017.
- Additional storage will be required in Operating Area D to resolve current storage deficiencies and provide sufficient capacity for future customers.
- A new 560 Zone supplied by a booster pump station needs to be constructed to provide suitable pressures to the City's highest elevation customers.
- Booster pump stations need to be constructed to convey water from the Sunnyside Wells to higher pressure zones, and to provide for expansion and redundant supply to the higher pressure zones.
- The Lake Goodwin standpipe needs to be replaced.
- Manganese treatment likely will need to be implemented at the Lake Goodwin Well. Improvements to the well are also needed to enable the water right capacity to be withdrawn without clogging the well screen.
- Arsenic treatment likely will need to be implemented at Edward Springs. Improvements are also needed for the spring collectors and wells to increase their capacity to the water right amount.
- The Highway 9 Well needs to be evaluated and improved if feasible.
- Cathodic protection needs to be installed on the City's steel reservoirs.
- A new pressure reducing valve (PRV) needs to be constructed between the 327 and 240 Zones to allow water produced at Lake Goodwin to reach the system's lower pressure zones.

- Several pressure zone improvements, consisting of new water main, PRVs, and valve configuration changes, need to be implemented to address high and low pressures.
- Several areas of the system require water main replacements to resolve deficiencies related to low fire flows, aging water main, and undesirable materials.

PROPOSED WATER SYSTEM IMPROVEMENTS AND FINANCING PLAN

Improvements to the water system are necessary, primarily to resolve existing system deficiencies, but also to accommodate the increase in water demands from future growth. Improvements identified for the first 5 years of the capital improvement program (2017 through 2021) are estimated to cost approximately $29,884,000, which results in an average expenditure of approximately $5,977,000 per year. Improvements in the following 5 years (2022 through 2026) are estimated to cost approximately $28,830,000, or approximately $5,766,000 per year. Improvements for 2027 through 2036 are estimated to cost approximately $42,057,000, or approximately $4,205,700 per year. The financial analysis is intended to illustrate the feasibility of funding the operation and maintenance and capital improvements recommended for the water system in the next 6 years.

1 | INTRODUCTION

WATER SYSTEM OWNERSHIP AND MANAGEMENT

The City of Marysville (City) is a municipal corporation that owns and operates a public water system which covers most of its corporate boundaries and some areas outside the City's corporate boundaries. Water system data on file at the Washington State Department of Health (DOH) for the City's system is shown in **Table 1-1**.

Table 1-1
Water System Ownership Information

Information Type	Description
System Type	Group A - Community - Public Water System
System Name	Marysville Utilities
County	Snohomish
DOH System ID Number	51900C
Owner Number	003633
Address	20 Columbia Avenue, Marysville, WA 98270
Contact	Mr. Douglas Byde, Public Works Superintendent
Contact Phone Number	(360) 363-8125

OVERVIEW OF EXISTING SYSTEM

In 2014, the City provided water service to an average of approximately 20,376 customer connections, or 42,628 equivalent residential units (ERUs), within the City's water service area. The City limits comprise an area of approximately 20.9 square miles, and the existing retail water service area is approximately 25.0 square miles. The 2014 population served by the water system was approximately 66,686, whereas the population residing in the City limits was approximately 62,600.

The City's water supply is currently provided by four wells, a spring, a Ranney well, and an intertie connection with the City of Everett. The City also owns three additional wells that are currently offline for water quality purposes. The Edward Springs Wells are chlorinated. The spring source has both chlorine and ultraviolet (UV) disinfection equipment. The Stillaguamish Ranney Well is filtered using low pressure, submerged membrane filtration and chlorinated. The Lake Goodwin Well is also chlorinated. Water from the City of Everett is chlorinated and fluoridated. Water storage is provided by 9 reservoirs that have a total capacity of approximately 24.3 million gallons (MG). In addition, the City's water system has 11 pressure zones, with 36 pressure reducing, pressure sustaining, and flow control valve stations. The system also has 3 booster pump stations, and more than 297 miles of water main. A summary of the 2014 water system data is shown in **Table 1-2**.

Table 1-2
2014 Water System Data

Description	Data
Water Service Population	66,686
Water Service Area	25.0 square miles
Total Connections	20,376
Total ERUs	42,628
Demand per ERU	158 gallons per day
Annual Consumption	2,462,419,872 gallons
Average Day Demand	4,685 gpm
Distribution System Leakage	N/A
Maximum Day/Average Day Demand Factor	1.76
Peak Hour/Maximum Day Demand Factor	1.84
Number of Pressure Zones	10
Number of Wells and Total Capacity[1]	8 (3,425 gpm)
Number of Spring Sources and Total Capacity	1 (760 gpm)
Everett Intertie Capacity	9,132 gpm
Number of Pump Stations and Total Capacity	3 (8,100 gpm)
Number of Reservoirs and Total Capacity	9 (24.3 MG)
Number of Pressure Reducing, Pressure Sustaining, and Flow Control Stations	36
Total Length of Water Main	297.6 miles

1 = The Highway 9 Well and the Sunnyside Well Nos. 1R and 2 are currently offline for water quality purposes.

AUTHORIZATION AND PURPOSE

The City of Marysville authorized RH2 Engineering, Inc., (RH2) to prepare this water system plan (WSP) as required by state law under Washington Administrative Code (WAC) 246-290-100. In accordance with WAC 246-290-100, the WSP shall be updated and submitted to DOH every 6 years. However, it is anticipated that the future requirements for WSP submittal will be modified from 6 years to 10 years once the proposed revisions to the WAC are approved in 2016. This WSP has been written to meet the 6-year and the 10-year planning requirements in anticipation of the proposed code revisions. The previous WSP was prepared for the City in 2009. The purpose of this updated WSP is as follows:

- To evaluate existing water demand data and project future water demands;
- To analyze the existing water system to determine if it meets minimum requirements mandated by DOH and the City's own policies and design criteria;
- To identify water system improvements that resolve existing system deficiencies and accommodate the system's future needs for at least 20 years into the future;
- To prepare a schedule of improvements that meets the goals of the City's financial program;
- To document the City's existing water rights, their current status, and future requirements;
- To evaluate past water quality and identify water quality improvements, as necessary;
- To document the City's operations and maintenance program;
- To prepare water use efficiency, cross-connection control, wellhead protection, and water quality monitoring plans; and
- To comply with all other WSP requirements of DOH.

SUMMARY OF WSP CONTENTS

A brief summary of the content of the chapters in the WSP is as follows.

- The **Executive Summary** provides a brief summary of the key elements of this WSP.
- **Chapter 1** introduces the reader to the City's water system, the objectives of the WSP, and its organization.
- **Chapter 2** presents the water service area, describes the existing water system, and identifies the adjacent water purveyors.
- **Chapter 3** presents related plans, land use, and population characteristics.
- **Chapter 4** identifies existing water demands and projected future demands.
- **Chapter 5** presents the City's operational policies and design criteria.
- **Chapter 6** discusses the City's water source, water rights, and water quality monitoring.
- **Chapter 7** discusses the water system analyses and existing system deficiencies.
- **Chapter 8** discusses the City's operations and maintenance program.
- **Chapter 9** presents the proposed water system improvements, their estimated costs, and implementation schedule.
- **Chapter 10** summarizes the financial status of the water system and presents a plan for funding the water system improvements.
- The **Appendices** contain additional information and plans that supplement the main chapters of the WSP.

DEFINITION OF TERMS

The following terms are used throughout this WSP.

Capital Facilities Charge: A one-time fee paid by a property owner when connecting to the City's water system. This fee pays for the new customers' equitable share of the cost of the existing system. This fee offsets the costs of providing water to new customers and recognizes that the existing water system was largely built and paid for by the existing customers.

Consumption: The true volume of water used by the water system's customers. The volume is measured at each customer's connection to the distribution system.

Connection Charge: A one-time fee paid by a property owner when connecting to the City's system that is made up of both the Capital Facilities Charge and the Meter Installation Charge.

Cross Connection: A physical arrangement that connects a public water system, directly or indirectly, with facilities that could present the potential for contaminating the public water system.

Demand: The quantity of water required from a water supply source over a period of time necessary to meet the needs of domestic, commercial, industrial, and public uses, and to provide enough water to supply firefighting, system losses, and miscellaneous water uses. Demands are normally discussed in terms of flow rate, such as million gallons per day (MGD) or gallons per minute (gpm), and are described in terms of a volume of water delivered during a certain time period. Flow rates pertinent to the analysis and design of water systems are:

- **Average Day Demand (ADD):** The total amount of water delivered to the system in a year divided by the number of days in the year;
- **Maximum Day Demand (MDD):** The maximum amount of water delivered to the system during a 24-hour time period of a given year; and
- **Peak Hour Demand (PHD):** The maximum amount of water delivered to the system, excluding fire flow, during a 1-hour time period of a given year. A system's peak hour demand usually occurs during the same day as the MDD.

Distribution System Leakage (DSL): Water that is measured as going into the distribution system but not metered as going out of the system.

Equivalent Residential Units (ERUs): One ERU represents the amount of water used by one single-family residence for a specific water system. The demand of other customer classes can be expressed in terms of ERUs by dividing the demand of each of the other customer classes by the demand represented by one ERU.

Fire Flow: The rate of flow of water required during fire fighting, which is usually expressed in terms of gpm.

Head: A measure of pressure or force exerted by water. Head is measured in feet and can be converted to pounds per square inch (psi) by dividing feet by 2.31.

Head Loss: Pressure reduction resulting from pipeline wall friction, bends, physical restrictions, or obstructions.

Hydraulic Elevation: The height of a free water surface above a defined datum; the height above the ground to which water in a pressure pipeline would rise in a vertical open-end pipe.

Maximum Contaminant Level (MCL): The maximum permissible level of contaminant in the water that the purveyor delivers to any public water system user, measured at the locations identified under WAC 246-290-300, Table 3.

Meter Installation Charge: The installation charge or hook-up fee that is paid by a property owner to reimburse the City for the cost incurred to make the physical connection to the water system. This cost includes both direct and indirect costs for installing the service line off of the system's water main up to and including the City-owned water meter and advanced metering infrastructure (AMI) equipment.

Potable: Water suitable for human consumption.

Pressure Zone: A portion of the water system that operates from sources at a common hydraulic elevation. For example, the 170 Zone refers to the City's lower pressure zone, which has a reservoir with an overflow elevation of 170 feet.

Purveyor: An agency, subdivision of the state, municipal corporation, firm, company, mutual or cooperative association, institution, partnership, or persons or other entity owning or operating a public water system. Purveyor also means the authorized agents of such entities.

Supply: Water that is delivered to a water system by one or more supply facilities, which may consist of supply stations, booster pump stations, springs, and wells.

Storage: Water that is "stored" in a reservoir to supplement the supply facilities of a system and provide water supply for emergency conditions. Storage is broken down into the following five components, which are defined and discussed in more detail in **Chapter 7**: operational storage, equalizing storage, standby storage, fire flow storage, and dead storage.

LIST OF ABBREVIATIONS

The abbreviations listed in **Table 1-3** are used throughout this WSP.

Table 1-3
Abbreviations

Abbreviation	Description
ADD	Average Day Demand
AWWA	American Water Works Association
CCR	Consumer Confidence Report
CIP	Capital Improvement Program
City	City of Marysville
County	Snohomish County
CWSP	Coordinated Water System Plan
CWSSA	Critical Water Supply Service Area
DBP	Disinfection By-product
DOH	Washington State Department of Health
DSL	Distribution System Leakage
EPA	U.S. Environmental Protection Agency
ERU	Equivalent Residential Unit
fps	feet per second
GMA	Growth Management Act
gpm	gallons per minute
JOA	Joint Operating Agreement
MCL	Maximum Contaminant Level
MCLG	Maximum Contaminant Level Goal
MDD	Maximum Day Demand
MG	Million Gallons
MGD	Million Gallons per Day
mg/L	milligrams per Liter
OFM	Office of Financial Management
OSHA	Occupational Safety & Health Administration
PHD	Peak Hour Demand
psi	pounds per square inch
PUD	Snohomish County Public Utility District No.1
RCW	Revised Code of Washington
SDWA	Safe Drinking Water Act
SEPA	State Environmental Policy Act
SOC	Synthetic Organic Chemical
SWTR	Surface Water Treatment Rule
THM	Trihalomethane
UGA	Urban Growth Area
USGS	United States Geological Survey
VOC	Volatile Organic Chemical
WAC	Washington Administrative Code
WISHA	Washington Industrial Safety & Health Act
WSP	Water System Plan
WUCC	Water Utility Coordinating Committee
WUE	Water Use Efficiency

2 | WATER SYSTEM DESCRIPTION

INTRODUCTION

This chapter describes the City's existing and future water service areas and water service agreements, and provides a thorough description of the water system and its individual components. The results of the evaluation and analyses of the existing water system are presented in **Chapter 7**.

WATER SERVICE AREA

HISTORY

The City's water system was initially established in the 1930s. Edward Springs was the first source for the system. The Edward Springs water right was originally limited to 0.5 million gallons per day (MGD), but has been increased to 3.2 MGD. The Sunnyside Wells began supplying the system in the 1950s and 1960s. The Lake Goodwin Well was constructed and began supplying the system in 1970, and the Stillaguamish River Ranney Well was constructed and began supplying the system in 1978. The Highway 9 Well was constructed and entered service in 1981, but is currently offline due to water quality concerns. The Stillaguamish River Ranney Well and the Edward Springs source were designated groundwater under the influence of surface water (GWI) sources in 2000. In response, the Edward Springs treatment plant was constructed in 2004, and the Stillaguamish River Water Treatment Plant (WTP), a 3.2 MGD dual-train membrane treatment plant, was constructed and put into service in 2006. The Sunnyside Well Treatment Facility is under construction and is anticipated to be completed in 2017. The facility will provide iron and manganese treatment of water supplied from the two Sunnyside Wells.

EXISTING RETAIL WATER SERVICE AREA

The City's existing retail water service area, which covers an area of approximately 25.0 square miles, is non-uniformly shaped. The existing water service area is shown on **Figure 2-1**. The existing service area is approximately bordered by Highway 531 to the north, Interstate 5 (I-5) and the Forty Five Road to the west, Steamboat Slough and Soper Hill Road to the south, and Highway 9 and 67th Avenue NE to the east. Along the north-south axis of the system, the existing retail water service area is approximately 10 miles long. Along the east-west axis, the existing retail water service area varies from 2 to 4 miles wide. Several served areas are non-contiguous with the rest of the water service area. Two of these areas, located on the Tulalip Indian Reservation to the southwest of the City Limits, are served directly by the City. Another area near Lake Ki also is served directly by the City. In addition, the Arlington Christian School (well north of the City) is supplied by the City of Arlington but billed by Marysville. The Washington State Patrol office to the west of the City is also billed by Marysville but supplied by other purveyors. The Ottercrest Estates Water System and the Smith Gardens Water System are surrounded by the City's existing retail water service area boundary, but are not supplied by the City.

Along with the existing retail water service area, Marysville's city limits and urban growth area (UGA) boundary are shown in **Figure 2-1**.

FUTURE WATER SERVICE AREA

The City's future water service area, as defined in the 2010 *North Snohomish County Coordinated Water System Plan* (CWSP), includes all of the area in the existing retail water service area, as well as additional area between 67th Avenue NE and Highway 9, and areas to the south of the existing retail water service area. The area of the future water service area is approximately 31.5 square miles. The City's future water service area is shown on **Figure 2-1**.

TOPOGRAPHY

The topography of the existing service area is generally rising in elevation along the outer boundaries, with the highest elevations on the hillsides in the southeast parts of the service area. Service area elevation begins at just above sea level in the south, with the highest elevation being approximately 470 feet on the eastern side.

The majority of the City's system is located within the Quilceda Creek watershed. The smaller Allen Creek watershed accounts for the remainder of the service area. A complex of tidal sloughs lies immediately to the south of the service area, and just beyond the north limit is a drainage divide defining the Stillaguamish River basin. The Stillaguamish River flows about 2 miles north of the main existing service area boundary.

GEOLOGY[1]

The City's service area includes topographic uplands or plateaus to the east (Getchell Plateau) and west (Tulalip Plateau) flanking a wide flat-bottomed north-south trending depression (Marysville Trough) that runs between the Snohomish and Stillaguamish Rivers.

Bedrock occurs at a depth of greater than 1,200 feet beneath the City. Above this bedrock is an extensive thickness of unconsolidated sediments that have been deposited during glacial and non-glacial periods over the past 2 million years. The most recent sediments were deposited during the Vashon Glaciation, which lasted from approximately 15,000 to 10,000 years ago, and more recently by present day streams.

The youngest unit found within the City is alluvium that is associated with the larger streams, such as Allen Creek, Quilceda Creek, and the mouth of the Snohomish River. The sediment associated with the streams is reworked sand from the glacial deposits that the streams have incised. The sediment near the mouth of the Snohomish River is clay and silt, since it is far from the source of the sediment in the mountains and the river is low energy at this location. There are also some young, isolated bog, marsh, and peat deposits within this unit. The City's Ranney Well pulls water from alluvium adjacent to the Stillaguamish River.

Underlying the Marysville Trough is a layer of sand that can be 100 feet thick. This sand was deposited by streams flowing from the retreating Vashon glacier and is referred to as the Vashon recessional outwash unit.

Beneath most of the Marysville Trough, and capping the plateaus, is Vashon glacial till. This sediment was deposited beneath the Vashon glacier and is composed of an unsorted mixture of

[1] Reference: Thomas, B.E., Wilkinson, J.M., and Embrey, S.S. 1997. The Ground-Water System and Ground-Water Quality in Western Snohomish County, Washington. U.S. Geological Survey. Water-Resources Investigations Report 96-4312.

boulders, cobbles, gravel, sand, silt, and clay. The unit is very compact, and does not transmit water well, since it was overridden and consolidated by more than 4,000 feet of glacial ice.

Prior to the Vashon glacier advancing south of the City, rivers flowing off the advancing glacier deposited sediment referred to as advance outwash. This unit is compact, since it was overridden by the glacier, but is permeable due to the high percentage of sand and gravel. This unit holds and transmits groundwater that is utilized by many municipal and individual well owners. Where the unit intersects the ground surface in ravines and on the edge of the plateaus, the groundwater flowing in the unit discharges via springs. The City's facilities at Edward Springs tap water discharging from the advance outwash aquifer. The advance outwash or deeper aquifer units are also the source of water for the remainder of the City's wells.

Groundwater flow within the City is generally from the plateaus toward the trough. Once in the trough, groundwater flows either north toward the Stillaguamish River, or south toward the mouth of the Snohomish River. The groundwater flow divide within the trough roughly follows the surface water divide, which is near the Arlington Airport.

Groundwater within the recessional outwash in the Marysville Trough has a moderate to high relative sensitivity to contamination. Groundwater under the plateaus or in deeper units such as the advance outwash have a low relative sensitivity to contamination.

INVENTORY OF EXISTING WATER FACILITIES

This section provides a detailed description of the existing water system and the current operation of the facilities. The analysis of the existing water facilities is presented in **Chapter 7**. Additional information on the City's existing water system facilities is included on the Washington State Department of Health (DOH) Water Facilities Inventory (WFI) form in **Appendix A**.

PRESSURE ZONES

The City serves customers within an elevation range of sea level near the south end of the system to approximately 440 feet on the eastern side of the system. The wide elevation range requires that the water pressure be increased or reduced to maintain pressures that are safe and sufficient to meet the flow requirements of the system. The City achieves this by dividing the water system into 11 different pressure zones, as shown in **Figure 2-1**. The pressure in each pressure zone is regulated by reservoir levels, pressure reducing/pressure sustaining/flow control station settings, pump station settings, or a combination of these, as illustrated in the hydraulic profile, **Figure 2-2**.

The 510 Zone is supplied with water from the Cedarcrest Booster Pump Station (BPS). Pressures in the 510 Zone are established by the Highway 9 Reservoir. This Zone currently serves customers within an elevation range between approximately 213 feet and 440 feet, and is located at the eastern extent of the system, primarily between 73rd Avenue NE and Highway 9.

The 460 Zone is supplied with water from the Lake Goodwin Well and from the Edward Springs BPS. Pressures in the 460 Zone are established by the Lake Goodwin Standpipe. This zone currently serves customers within an elevation range between approximately 286 feet and 341 feet, and is located at the northwestern extent of the system, along Lakewood Road north of the Edward Springs Reservoir.

The 440 Zone is a small zone supplied by two pressure reducing stations that establish pressures in the zone. The 7701 Grove Street NE pressure reducing valve (PRV) provides supply from the Everett Intertie/JOA Pipeline and the 7311 76th Drive NE PRV provides supply from the

510 Zone. The 440 Zone currently serves customers immediately south and east of the Cedarcrest Reservoir, within an elevation range between approximately 158 feet and 268 feet.

Water is supplied to the 415 Zone from the 510 Zone via the 8017 44th Street NE PRV, and the 8117 Soper Hill Road PRV. Pressures in the zone are established by these two PRVs. This zone currently serves customers within an elevation range between approximately 64 feet and 300 feet, and is located at the south end of the system, in the area around the Sunnyside Reservoir.

The 360 Zone is currently supplied by several pressure reducing stations, a flow control station, and a pressure sustaining station. Supply to the zone is primarily provided by the Everett intertie. The zone will also be supplied by the Sunnyside Wells once the treatment facility is completed in 2017. The 360 Zone is comprised of two separate areas. Pressures in the North 360 Zone are established by the Getchell Reservoir, and pressures in the South 360 Zone are established by the Sunnyside Reservoir. The 7301 52nd Street NE PRV, the 7421 78th Street NE PRV, and the 7311 76th Drive NE PRV can supply the 360 Zone from the 510 Zone. The Sunnyside flow control valve (FCV), the 7528 64th Street NE PRV, the 7609 84th Street NE PRV, the 7701 Grove Street NE PRV, and the Getchell pressure sustaining valve (PSV) supply the 360 Zone from the Everett Intertie/JOA Pipeline. The 360 Zone currently serves customers within an elevation range between approximately 75 feet and 292 feet.

The 327 Zone is supplied via a pressure sustaining valve station from the 460 Zone. This zone currently serves customers within an elevation range between approximately 140 feet and 253 feet, and is located in the area north of the Forty Five Road, west of 11th Avenue NE, and south of 172nd Street NE. Pressures in the 327 Zone are established by the 327 Zone Reservoir.

The 285 Zone is supplied by three pressure reducing stations: the 6513 52nd Street NE PRV, the 6802 40th Street NE PRV, and the 6913 Sunnyside Boulevard PRV, all from the 415 Zone. Pressures in the zone are established by these PRVs. This zone currently serves customers within an elevation range between approximately 21 feet and 184 feet, and is located to the west of the 415 Zone in the south end of the system.

The 260 Zone is a small zone supplied by one pressure reducing station from the North 360 Zone. The 6605 100th Street NE PRV No. 2 establishes the pressure in the zone. The 260 Zone currently serves customers within an elevation range between approximately 81 feet and 144 feet, and is approximately bounded by 60th Avenue NE to the west, 67th Avenue NE to the east, 108th Street NE to the north, and 100th Street NE to the south.

The 240 Zone is the largest zone by area in the system. It is supplied by the Edward Springs spring source and wells, the Stillaguamish Ranney Well Collector, and several pressure reducing stations. The 6605 100th Street NE PRV No. 1, 6831 52nd Street NE PRV, 7000 64th Street NE PRV, 6904 71st Avenue NE PRV, and 7309 84th Street NE PRV all supply the 240 Zone from the 360 Zone. The 240 Zone is comprised of two separate areas. The first, larger area comprises the entire north-central part of the system, east of the 327 Zone and north of approximately 93rd Place NE. The second, smaller area is approximately bounded by 60th Drive NE to the west, 71st Avenue NE to the west, 88th Street NE to the north, and 52nd Street NE to the south. Pressures within the North 240 Zone are established by the Edward Springs Reservoir and the Wade Road Reservoir, and pressures in the South 240 Zone are established by four of the PRVs. The 240 Zone currently serves customers within an elevation range between approximately 22 feet and 195 feet. Two of the Tulalip Interties are also served by the North 240 Zone.

The 203 Zone is a small zone supplied by one pressure reducing station, the 3508 90th Street NE PRV, from the North 240 Zone. The PRV station establishes the pressures in the zone. This zone

currently serves customers along Grannis Road/36th Avenue NE, near the 88th Street NE onramp to I-5, within an elevation range between approximately 40 feet and 51 feet.

The 170 Zone is supplied by pressure reducing stations and a flow control station. The 9700 State Avenue NE PRV, the 9509 45th Drive NE PRV, the 9804 48th Drive NE PRV, the 9600 51st Avenue NE PRV, the 9201 55th Avenue NE PRV, the 5801 Sunnyside Boulevard PRV, the 9135 61st Drive NE PRV, the 6213 83rd Place NE PRV, the 6502 64th Street NE PRV, the 9135 62nd Drive NE PRV, the 6621 79th Place NE PRV, the 6629 88th Street NE PRV, and the 7216 71st Avenue NE PRV supply the 170 Zone from the 240 Zone. The 7300 71st Avenue NE PRV and the Cedarcrest FCV supply the 170 Zone from the Everett Intertie/JOA Pipeline via the 440 Zone. One of the Tulalip Interties is served by the 170 Zone. This zone serves customers within an elevation range between approximately 5 feet and 83 feet, and is located in the area approximately bounded by 19th Avenue NE in the west, 67th Avenue NE in the east, 98th Place NE in the north, and 52nd Street NE in the south.

SUPPLY FACILITIES

Introduction

Water in the City's system is supplied by both Marysville-owned sources and from Everett via the JOA pipeline. Everett's water supply comes from the Spada Lake Reservoir at the headwaters of the Sultan River.

Water supply from the JOA is delivered to the City through 30-inch and smaller transmission mains routed along 83rd Avenue NE. Water is provided to the City's system through three PRVs: the 7528 64th Street NE PRV, 7609 84th Street NE PRV, and 7701 Grove Street NE PRV, which supply the 360 and 440 Zones. Water also is supplied directly to the Getchell Reservoir from the JOA pipeline via a pressure sustaining valve and to the Sunnyside Reservoir via a flow control valve.

Marysville-owned sources include the Lake Goodwin Well, Edward Springs and Wells, the Stillaguamish River Ranney Well Collector, Sunnyside Wells No. 1R and 2, and the Highway 9 Well. A summary of the City's sources of supply is shown in **Table 2-1**. Additional information on the City's source of supply, water treatment, and water quality monitoring is contained in **Chapter 6**.

Table 2-1
Supply Facilities Summary

Well	Pressure Zone	Year Installed	Use	Existing Pumping Capacity (gpm)	Well Depth (feet)	Well Diameter (inches)	Pump Type	Pump Motor Size (hp)	Water Treatment
Stillaguamish Ranney Well Collector	240 Zone	1978	Active	2,250	n/a	n/a	(2) Submersible	(2) 100	Membrane, Chlorine
Edward Springs Spring Source	240 Zone	1930s	Active	760	n/a	n/a	Centrifugal	(2) 3	Chlorine, UV
Edward Springs Well No. 1R	240 Zone	2008	Active	170	182	12	Submersible	15	Chlorine
Edward Springs Well No. 2	240 Zone	Prior to 1960[1]	Active	225	150	unknown	Submersible	15	Chlorine
Edward Springs Well No. 3	240 Zone	1987 [1]	Active	300	181	unknown	Submersible	25	Chlorine
Lake Goodwin Well	460 Zone	1970	Active	350	450	unknown	Vertical Turbine	50	Chlorine
Highway 9 Well	510 Zone	1981	Offline[2]	n/a	270	unknown	n/a	n/a	n/a
Sunnyside Well No. 1R	360 Zone	2009	Offline[2]	n/a	278	16	n/a	n/a	n/a
Sunnyside Well No. 2	360 Zone	1965	Offline[2]	n/a	328	16	Vertical Turbine	100	n/a

1 = Rehabilitated in 2004.
2 = Currently offline for water quality purposes.

Water Treatment

Stillaguamish River Water Treatment Plant

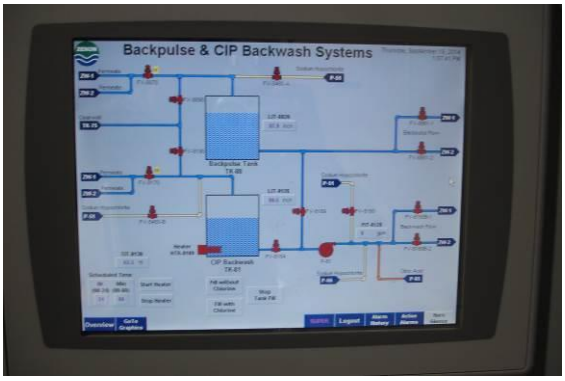

Stillaguamish River WTP Configuration

The Stillaguamish River WTP is located at 17906 43rd Avenue NE and was put into service in 2006 in response to the designation of the Ranney Well Collector source as a GWI source by DOH in March 2000. The membrane plant was designed to treat the Ranney Well Collector source water in compliance with the Surface Water Treatment Rule and the Long Term 2 Enhanced Surface Water Treatment Rule (LT2ESWTR). The plant is available to operate 24 hours a day, 7 days a week, year round. The plant is designed to produce a maximum quantity of approximately 3.2 MGD. Raw water is pumped from the Ranney Well Collector through an 18-inch-diameter supply line and passes first through a basket strainer prior to entry to the main plant. The flow then enters the membrane filtration tanks where it is treated. The primary treatment process for the WTP is a filtration process utilizing low-pressure, submerged membrane technology manufactured and supplied by GE Water and Process Technologies. No pre-treatment is currently used in the treatment process; however, provisions have been designed to incorporate chlorine into the process upstream of the membrane tanks if needed in the future. Filtered water is pumped by vacuum from the membrane tanks and disinfected with sodium hypochlorite, followed by storage and disinfection contact in an above-grade, 0.2 million gallon (MG), steel clearwell before being pumped into the City's distribution system.

Edward Springs Water Treatment Plant

In 2004, the City built a sodium hypochlorite chlorine disinfection facility for the Edward Springs system. The treatment facility is located on the Edward Springs Reservoir site at 614 Lakewood Road. Ultraviolet (UV) disinfection has been added to the facility to meet the requirements of the LT2ESWTR, which required unfiltered surface water and unfiltered GWI supplies to achieve a minimum of 2-log inactivation for *Cryptosporidium* by 2012. The UV disinfection system treats the spring water, while the 3 deep wells bypass the UV system before being combined with the spring water prior to chlorination.

Edward Springs Water Treatment Plant

Lake Goodwin Well Chlorination Building

The Lake Goodwin Well has on-site chlorination in a small building near the well pump building. The well is located at 3914 176th Street NW, on the same site as the Lake Goodwin Standpipe. Water drawn from the well is chlorinated before being pumped to the standpipe and the 460 Zone distribution system.

Lake Goodwin Well On-site Chlorination

Sunnyside Well Treatment Facility

Construction of the Sunnyside Well Treatment Facility is anticipated to be completed in 2017. Once complete, the facility will include on-site sodium hypochlorite generation and an oxidation/filtration treatment process to remove iron and manganese from Sunnyside Well Nos. 1R and 2. The treatment facility will be located on the same site as the wells and the Sunnyside Reservoir at 4021 71st Avenue NE.

Water Supply

Stillaguamish Ranney Well Collector

The Stillaguamish Ranney Well Collector was constructed and brought online in 1978. The Ranney Well Collector is located at 23317 Dike Road and supplies the 240 Zone via the Stillaguamish River WTP and BPS. The collector well has the capacity to supply the full 3.2 MGD water right. Two 100 hp, 1,125 gallon per minute (gpm) capacity submersible pumps are installed in a 16-foot-diameter, 38-foot-deep caisson buried in the riverbed. During the construction of the Stillaguamish River WTP, the Ranney pumps were de-staged and variable frequency

Stillaguamish Ranney Well Collector Site

drives were added to the pump controls. Seven screened 10-inch collector lines, each approximately 100 feet long, extend out radially from the caisson bottom. Subsurface water is screened through the collectors and flows by gravity to the caisson pumps, where it is pumped to the Stillaguamish River WTP for treatment and then pumped out into the distribution system. Because of the historic high turbidity level and the inability to control activity in the watershed, the Stillaguamish source is classified as a "filtration required source." The membrane facility was put in service in December 2006.

Edward Springs and Associated Wells

The Edward Springs source was developed as a Work Projects Administration project in the 1930s, with an initial capacity of 1.4 MGD. The source is located northwest of the Edward Springs Reservoir at 614 Lakewood Road.

Improvements to the collection system have increased the spring's capacity to 2.5 MGD. Water is collected from the springs by approximately 23 shallow collectors. Water flows by gravity from some collectors to a screen house where it is pumped to the Edward Springs WTP located adjacent to the Edward Springs Reservoir. Historically, water had been chlorinated at the screen house, but the treatment equipment has been removed. The remaining collectors flow by gravity directly to the Edward Springs WTP.

In addition to the spring, there are three drilled wells in the Edward Springs watershed. Wells No. 1 and No. 2 were installed prior to 1960. Well No. 3 is located near the Edward Springs Reservoir and was installed in 1987. In 2008, Well No. 1 was replaced with Well No. 1R. Although Well No. 1R has the capacity to supply 300 gpm, it is limited to delivering 200 gpm when the other pumps are also operating. Wells No. 2 and 3 were rehabilitated in 2004. All wells are pumped to the Edward Springs WTP.

DOH classified the spring collection system as a GWI source in March 2000. This classification has made the source subject to all rules and requirements of the Surface Water Treatment Rule (SWTR). In contrast to the Stillaguamish Ranney Well Collector source, Edward Springs has a controlled access watershed and water with consistently low turbidity.

The City operates the Edward Springs source under the filtration avoidance clause of the SWTR through development of a Watershed Management Plan and

Edward Springs Screen House

Edward Springs Collector

Edward Springs Well No. 1R

other improvements that include fencing and signage at the watershed perimeter and disinfection and contact time (CT) compliance improvements. In addition, the City thoroughly documents the water quality history for the Edward Springs source as another requirement to continue avoiding filtration for this source.

The Edward Springs source and associated wells supply the 240 Zone and the Edward Springs Reservoir.

Edward Springs Well No. 2

Edward Springs Well No. 3

Lake Goodwin Well

The Lake Goodwin Well was originally constructed in 1970 and is located at 3914 176th Street NW, on the same site as the Lake Goodwin Standpipe. The well directly supplies the 460 Zone and the Lake Goodwin Standpipe. The Lake Goodwin Well is also the source for the 327 Zone via a pressure sustaining valve that was put into service in 2008.

Lake Goodwin Well

The Lake Goodwin Well is currently isolated from the Edward Springs Reservoir by a closed valve but has the capability to pump directly into the reservoir through a 12-inch supply main. The well was intended to provide an additional 550 gpm backup to Edward Springs. However, pumping at that flow created clogging of the well screen by small silt particles. Therefore, the maximum operating capacity of the Lake Goodwin Well is limited to 350 gpm. Water from the well is chlorinated onsite.

JOA Supply Pipeline

In June of 1992, the City began receiving wholesale water from the City of Everett (Everett) under the JOA. The 30-inch JOA supply pipeline connects to Everett's transmission lines near Hewitt Road and extends north, connecting to the City's water system at the intersection of 83rd Avenue NE and 44th Street NE. The source of that water is the Sultan River. The water is treated by filtration and chlorinated by Everett before transmission to the City. Total capacity of the 30-inch JOA supply pipeline is 20.66 MGD; under the JOA and subsequent agreement with Snohomish County PUD, Marysville receives up to 13.15 MGD. The remaining 7.51 MGD is wheeled to the Tulalip Tribes and Snohomish County PUD in accordance with the JOA. The JOA and related agreements which assign capacity rights to the JOA participants are described later in this chapter.

Highway 9 Well

Located at 8870 64th Street NE, the Highway 9 Well was constructed in 1981 to serve the 510 Zone. The well is located at the same site as the Highway 9 Reservoir.

Highway 9 Well Building

The well is not currently used for supply due to water quality concerns associated with elevated levels of iron, manganese, and arsenic. A recent positive bacteriological sample was collected from the well. There have also been undocumented reports that the operation of the Highway 9 Well impacted the water levels of domestic wells in its vicinity. The Highway 9 Well was taken offline in 1984.

The City is currently evaluating improvements to bring the well back online. The improvements will likely include a new treatment facility, improvements to provide a CT of 6 and will require an aquifer monitoring program to evaluate whether the operation of the well impacts other wells in the vicinity.

Sunnyside Wells

The Sunnyside Wells are located at 4021 71st Avenue NE, on the same site as the Sunnyside Reservoir. Sunnyside Well No. 1 was constructed in 1956 and was decommissioned in 2007. The original well was replaced by the Sunnyside Well No. 1R, which was constructed in 2009. Sunnyside Well No. 2 was constructed in 1965. The Sunnyside Well No. 1R and Sunnyside Well No. 2 have a history of high iron and manganese levels. As a result of the water quality issues, Well No. 1R is not currently equipped and Well No. 2 is maintained only as an emergency source in the event the JOA supply pipeline is offline. Well No. 2 is exercised on a quarterly basis and tested annually, enabling the City to use it as necessary. The well was chlorinated when operated as a primary source; however, all disinfection equipment was removed when the well was reclassified for secondary use only.

Sunnyside Well No. 2

Once the Sunnyside Well Water Treatment Facility is completed in 2017, the Sunnyside Well No. 1R and Sunnyside Well No. 2 will be capable of supplying up to 1,000 gpm each. The wells will directly supply the Sunnyside Reservoir and the 360 Zone.

PUMP STATION FACILITIES

The City's water system has three booster pump station facilities that provide supply to the 240, 460, and 510 Zones. A summary of the pumping facilities is shown in **Table 2-2**, and a detailed description of each facility is provided below.

Table 2-2
Booster Pump Station Facilities Summary

Pump Station	Suction Pressure Zone	Discharge Pressure Zone	Year Constructed	Existing Pumping Capacity	Number of Pumps	Pump Type	Pump Motor Size (hp)
Edward Springs BPS	240 Zone	460 Zone	2001	3,500	2	Vertical Turbine	2 (75)
Cedarcrest BPS	170 Zone	510 Zone	1987	2,400	3	Submersible	3 (150)
Stillaguamish WTP BPS	Stillaguamish	240 Zone	2006	2,200	3	Centrifugal	3 (50)

Edward Springs Booster Pump Station

The Edward Springs BPS was originally constructed to boost pressure during peak demands and provide adequate fire flow in the North 240 Zone prior to the installation of the Stillaguamish WTP BPS. The booster station is located adjacent to the Edward Springs Reservoir at 614 Lakewood Road. After the Stillaguamish WTP pumps was brought online, the Edward Springs BPS was modified to supply fire flow and back-up supply to the 460 and 327 Zones.

The two pumps in the station are each rated at 3,500 gpm and powered by 75 hp motors. Only one pump can operate at a time. The pump station has an engine generator for back-up power supply.

Edward Springs BPS

Cedarcrest Booster Pump Station

The Cedarcrest BPS was constructed in 1987 and is located at 7300 71st Avenue NE, on the same site as the Cedarcrest Reservoir. The three 125 hp electric motors drive submersible pumps that deliver 1,200 gpm each to the Highway 9 Reservoir in the 510 Zone. Up to two pumps can operate in the BPS at the same time to deliver a maximum supply rate of 2,400 gpm. The pump station does not have an engine generator for back-up power supply.

Cedarcrest BPS

Stillaguamish WTP Booster Pump Station

The Stillaguamish WTP BPS is located at 17906 43rd Avenue NE in the same building that houses the water treatment equipment for the Stillaguamish Ranney Wells. The Stillaguamish WTP BPS was constructed in 2006. Three identical centrifugal pumps supply finished water from the WTP clearwell to the 240 Zone. The 1,100 gpm pumps are powered by 50 hp motors. Up to two pumps can operate at the same time to deliver a maximum supply rate of 2,200 gpm. The pump station does not have an engine generator for back-up power supply.

Stillaguamish WTP BPS

STORAGE FACILITIES

The City's water system has nine storage facilities that provide storage to various zones in the system. A summary of the storage facilities is shown in **Table 2-3**, and a detailed description of each facility is provided in the following sections.

Table 2-3
Storage Facilities Summary

Reservoir	Approximate Location	Pressure Zone	Year Constructed	Material	Capacity (MG)	Diameter (feet)	Base Elev. (feet)	Overflow Elev. (feet)
Edward Springs Reservoir	614 Lakewood Rd	240 Zone	1975	PVC-lined embankment	6.0	Irregular	223	239.4
Stillaguamish River WTP Clearwell	17906 43rd Ave NE	Stillaguamish	2006	Steel	0.2	39.0	130	152.5
Wade Road Reservoir	7011 Wade Rd	240 Zone	2007	Steel	3.0	120.6	204	239.4
327 Zone Reservoir	614 Lakewood Rd	327 Zone	2008	Welded Steel	0.7	66.0	296	329
Getchell Reservoir	8210 98th Place NE	360 Zone	1995	Pre-stressed Concrete	6.0	182.0	328	360
Cedarcrest Reservoir	7300 71st Ave NE	170 Zone	1987	Pre-stressed Concrete	3.5	150.0	146.2	170.5
Highway 9 Reservoir	8812 64th St NE	510 Zone	1998	Steel	1.8	77.0	457.5	510
Sunnyside Reservoir	4021 71st Ave NE	360 Zone	2008	Welded Steel	3.0	89.0	296	360
Lake Goodwin Standpipe	3914 176th St NW	460 Zone	unknown	Corrugated Metal Pipe	0.003	4.0	427	459

Edward Springs Reservoir

The Edward Springs Reservoir is located at 614 Lakewood Road and provides a storage capacity of 6.0 MG to the 240 Zone. The reservoir is supplied by the Edward Springs collection system and wells and the Stillaguamish Ranney Well Collector. The reservoir was originally constructed in 1975, and a Hypalon® cover and polyvinyl chloride (PVC) liner with an improved anchoring system were installed in 1999. Curtain baffles were installed in the reservoir in 2008.

Edward Springs Reservoir

The in-ground reservoir has a base elevation of 223 feet and an overflow elevation of 239.4 feet. The storage volume provided by the reservoir varies by depth. The reservoir has an 18-inch inlet and 16-inch outlet but does not have an overflow. The Edward Springs Reservoir site is surrounded by a barbed-wire fence.

Stillaguamish River Water Treatment Plant Clearwell

The Stillaguamish River WTP Clearwell is located at 17906 43rd Avenue NE, adjacent to the Stillaguamish River WTP. This 39-foot-diameter, 0.2 MG steel clearwell reservoir has a base elevation of 130 feet and an overflow elevation of 152.5 feet. Finished water is pumped from the WTP membrane tanks into the clearwell, then the Stillaguamish WTP BPS pumps from the clearwell into the North 240 Zone distribution system. The clearwell is seismically restrained, has an exterior level gage, and is located on a secured site.

Stillaguamish River WTP Clearwell

Wade Road Reservoir

The Wade Road Reservoir is a 3.0 MG steel tank that provides water storage to the North 240 Zone. The reservoir is located at 7011 Wade Road and was constructed in 2007. The 120.6-foot-diameter reservoir has a base elevation of 204 feet, an overflow elevation of 239.4 feet, and a single 16-inch inlet/outlet pipe. The overflow and drain exit to a pond west of the facility. The reservoir ladder has a vandal shield, and a tall barbed-wire fence surrounds the site.

Wade Road Reservoir

327 Zone Reservoir

The 327 Zone Reservoir was constructed in 2008 and is located directly west of the Edward Springs Reservoir at 614 Lakewood Road. This steel reservoir provides storage for the 327 Zone and has a capacity of approximately 0.7 MG. The 327 Zone Reservoir has a diameter of 66 feet, a base elevation of 296 feet, and an overflow elevation of 329 feet.

The reservoir is supplied by a pressure sustaining valve from the 460 Zone. The reservoir has a ladder with a vandal shield, separate inlet and outlet pipes, and internal overflow piping that exits downhill to a storm drain. A short fence without barbed wire surrounds the 327 Zone Reservoir site.

327 Zone Reservoir

Getchell Reservoir

The Getchell Reservoir is located at 8210 98th Place NE and was brought online in 1996. It is a partially buried, pre-stressed concrete reservoir with a diameter of 182 feet, a base elevation of 328 feet, and an overflow elevation of 360 feet. This reservoir provides 6.0 MG of storage to the 360 Zone and is the terminus point of the JOA supply pipeline. The inlet pipe is 20-inch diameter and the outlet pipe is 24-inch diameter. The reservoir overflows to a ditch across 98th Street NE. The site is surrounded by a tall barbed-wire fence.

Getchell Reservoir

Cedarcrest Reservoir

The 3.5 MG Cedarcrest Reservoir was constructed in 1987 and is located at 7300 71st Avenue NE, on the same site as the Cedarcrest BPS. The partially buried, pre-stressed concrete reservoir provides storage to the 170 Zone. A flow control valve adjacent to the reservoir can fill the tank from the JOA pipeline.

The reservoir has a diameter of 150 feet, a base elevation of 146.2 feet, and an overflow elevation of 170.5 feet. The site is gated, locked, and fenced with a shorter fence without barbed wire. The tank overflows to a storm drain.

Cedarcrest Reservoir

Highway 9 Reservoir

The Highway 9 Reservoir is a 1.8 MG steel tank that was constructed in 1998 on the Highway 9 Well site at 8812 64th Street NE. The reservoir has a diameter of 77 feet, a base elevation of 457.5 feet, and an overflow elevation of 510 feet.

The Highway 9 Reservoir is filled by the Cedarcrest BPS and provides the only storage for the 510 Zone. The seismically restrained tank has a single inlet/outlet pipe, an overflow and separate drain discharging to an on-site swale, and is on a site that is gated, locked, and fenced with barbed wire. The reservoir has an exterior ladder with a vandal shield.

Highway 9 Reservoir

Sunnyside Reservoir

The 0.2 MG Sunnyside Standpipe was replaced in 2008 with a 3.0 MG steel reservoir that serves the 360 Zone. The JOA pipeline supplies water to the reservoir. The Sunnyside Reservoir is located at 4021 71st Avenue NE on a site that is shared with the Sunnyside Wells and fenced with barbed wire. The reservoir is equipped with an exterior ladder that has a vandal shield.

The Sunnyside Reservoir has a diameter of 89 feet, a base elevation of 296 feet, and an overflow elevation of 360 feet. The reservoir has a 14-inch inlet pipe and 18-inch outlet pipe, is seismically restrained, has an exterior level gage, and overflows to a storm drain.

Sunnyside Reservoir

Lake Goodwin Standpipe

The Lake Goodwin Standpipe is located on the Lake Goodwin Well site at 3914 176th Street NW. The 4-foot diameter facility has a base elevation of 427 feet, an overflow elevation of 459 feet, and provides 3,000 gallons of water storage for the 460 Zone. It is constructed of corrugated metal pipe and supported by guy wires. The Lake Goodwin Well fills the standpipe. The standpipe is in poor condition and in need of additional restraint or replacement.

Lake Goodwin Standpipe

DISTRIBUTION AND TRANSMISSION SYSTEM

The City's water system contains more than 297 miles of water main ranging in size from 2 inches to 24 inches. As shown in **Table 2-4**, most of the water main (approximately 73 percent) within the system is 8 inches in diameter or less. The remaining 27 percent of the water main is 10 inches in diameter or larger.

Table 2-4
Water Main Diameter Inventory

Diameter (Inches)	Length (Feet)	% of Total
4 or smaller	69,128	4.4%
6	423,314	26.9%
8	659,505	42.0%
10	62,073	4.0%
12	259,115	16.5%
14	15,344	1.0%
16	29,834	1.9%
18	42,740	2.7%
20	11	0.0%
24	10,269	0.7%
Total	**1,571,333**	**100%**

All of the water main in the City's system is constructed of either asbestos cement, cast iron, ductile iron, galvanized iron, or PVC, with approximately 67 percent of the system constructed of ductile iron pipe. All new water main installations are required to use ductile iron pipe in accordance with the City's development and construction standards. **Table 2-5** shows the City's existing water main inventory by material.

Table 2-5
Water Main Material Inventory

Diameter (Inches)	Length (Feet)	% of Total
Asbestos Cement	39,312	2.5%
Cast Iron	474,546	30.2%
Ductile Iron	1,044,431	66.5%
Galvanized Iron	451	0.0%
PVC	2,069	0.1%
Unknown	10,524	0.7%
Total	**1,571,333**	**100%**

Per industry standard, the life expectancy of water main is generally 50 years. Approximately 37 percent of the water main within the system was constructed in the 1970s or before and is reaching or has reached its projected life expectancy. The majority of this older water main is asbestos cement or cast iron. The remainder of the water main in the City's water system (discounting water main of unknown installation year), was constructed in the 1980s or later and is generally in good condition. A detailed breakdown of the City's water main installation year inventory is shown in **Table 2-6**.

Table 2-6
Water Main Installation Year Inventory

Year Installed	Length (Feet)	% of Total
1930s	27,979	1.8%
1940s	374	0.0%
1950s	112,580	7.2%
1960s	271,030	17.2%
1970s	167,979	10.7%
1980s	213,131	13.6%
1990s	342,191	21.8%
2000s	373,027	23.7%
2010s	12,551	0.8%
Unknown	50,491	3.2%
Total	**1,571,333**	**100%**

PRESSURE REDUCING, PRESSURE SUSTAINING, AND FLOW CONTROL STATIONS

Pressure reducing stations are connections between adjacent pressure zones that allow water to flow from the higher pressure zone to the lower pressure zone while reducing the pressure of the water to maintain a safe range of operating pressures in the lower zone. A pressure reducing station is essentially a below-grade vault (typically concrete) that normally contains two pressure reducing valves (PRVs), sometimes a pressure relief valve, piping, and other appurtenances. The PRV hydraulically varies the flow rate through the valve (up to the flow capacity of the valve) to maintain a constant set pressure on the downstream side of the valve for water flowing into the lower pressure zone.

Pressure reducing stations can serve multiple purposes. First, they can function as an active supply facility by maintaining a continuous supply of water into a lower zone that has no other source of supply. The pressure reducing stations that serve the 440 Zone, 415 Zone, 285 Zone, 260 Zone, and 203 Zone are this type. Pressure reducing stations can also function as standby supply facilities that are normally inactive (no water flowing through them). The operation of this type of station is typically triggered by a drop in water pressure near the downstream side of the station. A typical application of this function is a station that is only needed to supply additional water to a lower zone during a fire flow situation. The pressure setting of the control valve within the station allows it to remain closed during normal system operation and open only during high-demand conditions, like fire flows, to provide the additional supply needed. The pressure reducing stations that serve the

360 Zone, 240 Zone, and 170 Zone are of this type, since these zones have reservoirs that maintain pressures in their zone.

Pressure sustaining stations are connections between adjacent pressure zones that allow water to flow from the higher pressure zone to the lower pressure zone, provided the pressure in the higher zone remains above a certain threshold. Flow control stations allow water to flow from a higher pressure zone to a lower pressure zone at a regulated flow rate.

The City's water system has a total of 36 pressure reducing, pressure sustaining, or flow control stations, as shown in plan view in **Figure 2-1** and in profile view on **Figure 2-2**. One pressure reducing station provides water to the 440 Zone from the Everett Zone. Two pressure reducing stations provide water to the 415 Zone from the 510 Zone. Five pressure reducing stations actively supply water to the 360 Zone: three from the 510 Zone; and two from the Everett Zone. One pressure sustaining station and one flow control station also supply the 360 Zone from the Everett pipeline. One pressure sustaining station supplies the 327 Zone from the 460 Zone. Three pressure reducing stations supply the 285 Zone from the 415 Zone. One pressure reducing station supplies the 260 Zone from the 360 Zone. Five pressure reducing stations supply the 240 Zone from the 360 Zone. One pressure reducing station supplies the 203 Zone from the 240 Zone. Fourteen pressure reducing stations supply the 170 Zone; one from the 360 Zone, and thirteen from the 240 Zone. A flow control station also serves the 170 Zone from the 440 Zone. A list of all pressure reducing, flow control, and sustaining stations and related data is contained in **Table 2-7**.

Table 2-7
Pressure Reducing, Pressure Sustaining, and Flow Control Station Summary

Station Name	Upper Pressure Zone	Lower Pressure Zone	Year Installed/ Rebuilt
8117 Soper Hill Rd PRV	510	415	2012
8017 44th St NE PRV	510	415	unknown
7301 52nd St NE PRV	510	360	1994
7421 78th St NE PRV	510	360	1990, rebuilt 2012
7311 76th Dr NE PRV	510	360	1990, rebuilt 2012
Edward Springs PSV	460	327	unknown
Sunnyside FCV	Everett	360	unknown
7528 64th St NE PRV	Everett	360	1994, rebuilt 2014
7609 84th St NE PRV	Everett	360	1996, rebuilt 2016
7701 Grove St NE PRV	Everett	440	1990, rebuilt 2012
Getchell PSV	Everett	360	2014
6513 52nd St NE PRV	415	285	unknown
6802 40th St NE PRV	415	285	unknown
6913 Sunnyside Blvd PRV	415	285	2013
6605 100th St NE PRV No. 2	360	260	unknown
6605 100th St NE PRV No. 1	360	240	1997, rebuilt 2012
6831 52nd St NE PRV	360	240	1963
7000 64th St NE PRV	360	240	1994, rebuilt 2013
6904 71st Ave NE PRV	360	240	unknown
7309 84th St NE PRV	360	240	1996, rebuilt 2016
7300 71st Ave NE PRV	440	170	1997
Cedarcrest FCV	440	170	2016
3508 90th St NE PRV	240	203	2002
9700 State Ave NE PRV	240	170	unknown
9509 45th Dr NE PRV	240	170	2000
9804 48th Dr NE PRV	240	170	1990, rebuilt 2011
9600 51st Ave NE PRV	240	170	Rebuilt 2011
9201 55th Ave NE PRV	240	170	Rebuilt 2011
5801 Sunnyside Blvd PRV	240	170	2005
9135 61st Dr NE PRV	240	170	Rebuilt 2014
6213 83rd Pl NE PRV	240	170	1996, rebuilt 2013
6502 64th St NE PRV	240	170	Rebuilt 2011
9135 62nd Dr NE PRV	240	170	Rebuilt 2014
6621 79th Pl NE PRV	240	170	1998, rebuilt 2013
6629 88th St NE PRV	240	170	1996
7216 71st Ave NE PRV	240	170	1987

MASTER METERS

The City's water system has a total of four master meters (not including the meter at each supply station). Three of the master meters are installed at the Tulalip Tribes interties, and one is installed on the JOA pipeline to record the flow received from Everett.

WATER SYSTEM OPERATION AND CONTROL/TELEMETRY AND SUPERVISORY CONTROL SYSTEM

Successful operation of any municipal water system requires gathering and using accurate water system information. A telemetry and supervisory control system gathers information and can efficiently control a system by automatically optimizing facility operations. A telemetry and supervisory control system also provides instant alarm notification to operations personnel in the event of equipment failures, operational problems, fire, or other emergency situations.

The water system has a Headquarters telemetry control panel at the Public Works Building on Columbia Avenue. The City also has a remote control facility located at the Stillaguamish River WTP. System facilities, including source, storage, and pumping, can be controlled with the telemetry system. Detailed facility-specific telemetry capabilities are included in **Chapter 8**.

WATER SYSTEM INTERTIES

Water system interties are physical connections between two adjacent water systems. Interties are normally separated by a closed isolation valve or control valve. Emergency supply interties provide water from one system to another during emergency situations only. An emergency situation may occur when a water system loses its main source of supply or a major transmission main, or during firefighting situations, and is unable to provide a sufficient quantity of water to its customers. Normal supply interties provide water from one system to another during non-emergency situations and are typically supplying water at all times.

Emergency Supply Interties

The City has an emergency intertie located on Soper Hill Road with the Snohomish County PUD. Additionally, the City has emergency interties with the Tulalip Tribes, including a 4-inch emergency intertie at Marine View Drive and 20th Avenue NE, and a 6-inch emergency intertie at Marine View Drive and 27th Avenue NE. The 4-inch and 6-inch connections are not metered. The City formerly had emergency supply interties with the City of Arlington and the Seven Lakes Water District, but these no longer exist.

Metered Interties (Master Meters)

The City has three metered interties along I-5 that supply water wheeled through the City's system to the Tulalip Tribes. The interties are located at 116th Street NE, 88th Street NE, and 4th Street NE.

The 1995 Wheeling Agreement (Marysville and Tulalip Tribes) addresses the connection points at 4th Street NE and 88th Street NE. The 4th Street NE meter is located at the intersection of 31st Avenue and 66th Street near the Tulalip Casino. The 88th Street NE master meter is installed at the northwest corner of the intersections of 88th Street and 36th Avenue NE. The meter serves the Quilceda Business Park and commercial sites adjacent to the business park.

The 1995 Wheeling Agreement has conditions of service written into it that describe simultaneous delivery points. In 2008, the peak day demand at the 4th Street NE location was 2,000 gallons per day (gpd). At the 88th Street NE location, the peak day demand was 2.0 MGD.

By addendum to the 1995 Wheeling Agreement, the Tulalip Tribes were granted a 2-inch metered connection at 19th Avenue NE and 70th Street NE with a peak day demand of 160 gpm. The water utilized at this connection is counted against the 4th Street NE JOA allocation.

HISTORIC FACILITIES

Gregory Estates Booster Pump Station

The Gregory Estates BPS was installed to serve a development constructed to the east of the intersection of the Forty Five Road and 164th Street NE. The BPS was installed before the 327 Reservoir and piping were installed, and was removed after service was provided to the area from the 327 Zone.

WATER SERVICE AGREEMENTS

WATER SERVICE AREA AGREEMENT

The City's retail water service area is based on the 2010 CWSP and was recently revised in 2016. The current retail water service area agreement is included as **Appendix B**.

JOINT OPERATING AGREEMENT (JOA)

As part of the CWSP process, a Joint Operating Agreement (JOA) was developed in 1991, with the City, the Snohomish PUD, and Tulalip Tribes as the initial signatories. Pursuant to the CWSP, the JOA indicates that "projects that provide for the joint use and operation of transmission, storage, and pumping facilities" are in the best interest of Snohomish County (County) citizens. The general intent of the participants was "to cooperatively plan, design, construct, operate and maintain" the JOA pipeline and related facilities to allow for delivery of water from Everett's Sultan River source of supply. The JOA served to initiate construction of the pipeline, allocate capacity among the three participants, and provide for future cooperation. The JOA also describes conditions regarding wholesaling of water delivered through the pipeline.

The JOA recognizes that additional participants may join in the agreement in the future. Other agencies desiring capacity in the pipeline could potentially purchase capacity rights, but only upon the unanimous consent of the initial three participants. Other agencies may also have the opportunity to become a participant in the JOA for additional projects that may be developed in the future.

The JOA assigned capacity rights for the JOA pipeline to each of the initial three participants. In addition to their primary allocations, Snohomish County PUD and the City originally shared equal rights for the final 7.21 percent of the pipeline capacity, which was designated as supply for an area of overlap between the two entities' service areas; this area was referred to as the "Marysville/PUD Overlap area." In 2003, Snohomish County PUD entered into an agreement with the City that transferred the PUD's portion of the "Marysville/PUD Overlap area" capacity rights to the City (a description of this agreement follows). As a result of this agreement, the City's total capacity rights increased to 63.65 percent of the total capacity of the pipeline, which is equivalent to 13.15 MGD.

The current assigned capacity rights for the JOA pipeline are shown in **Table 2-8**.

Table 2-8
Current Capacity Rights for the JOA Pipeline

Entity	Pipeline Capacity for Forecasted 2010 Peak Day Demand (%)	Equivalency in MGD[1]
Marysville	63.65[2]	13.15
Snohomish PUD	16.55	3.42
Tulalip Tribes	19.80	4.09
Total	**100.00**	**20.66**

1 = Capacity for each participant in the JOA is based on a percentage of the 2010 Peak Day Demand as estimated in 1991 in the North Snohomish County Coordinated Water System Plan.
2 = Per a 2003 Agreement between Marysville and the Snohomish PUD, the capacity formerly outlined in the JOA as the 'Marysville/PUD Overlap Area' has been transferred to Marysville.

As part of the JOA, the City agreed to wheel water through its distribution system to the Tulalip Tribes, subject to capacity constraints in the City's system and the ability to meet the needs of the City's own customers. It was recognized that distribution system upgrades could be needed in the future to accommodate wheeling, and that costs would be shared on the basis of benefits received. The Tulalip Tribes also plan to operate a recently constructed pipeline that connects directly to Everett's system to meet future demand beyond its capacity right for the JOA pipeline.

The participants recognized that the JOA pipeline would meet only a portion of their future needs, and that additional facilities may be required, such as a second pipeline intertie with Everett and a regional reservoir. Planning for additional facilities is to be triggered when one of the JOA participants reaches 60 percent of its capacity rights. Construction is to begin when one of the participants reaches 85 percent of its capacity rights.

The current JOA agreement expires on July 1, 2020. The City will begin discussions for renewal of the JOA agreement in 2019.

ADDITIONAL AGREEMENTS RELATED TO JOA

Several additional agreements were negotiated among the City and its partners in the JOA, as well as with Everett. Collectively, these agreements define the terms and conditions related to construction and operation of the JOA pipeline and related facilities. These agreements are summarized in the following sections and included in **Appendix C**.

Water Supply Contract between Everett and JOA Participants

This agreement, initially signed in 1989 and revised in 1991, among the City, Everett, the Snohomish County PUD, and Tulalip Tribes addresses water supply from Everett's water system, delivered through the JOA pipeline. The term of the contract extends to July 1, 2020. Everett agrees to deliver water to serve as a primary source of supply for the three JOA participants in return for payment. The agreement indicates that the participants will reach peak demands through the pipeline during the term of the contract, and that additional facilities will be required to meet long-range demands. The agreement does not require the JOA participants to purchase any minimum quantity of water.

The agreement restricts resale of water through any meter larger than 12 inches in diameter or to any customer requiring more than 1 MGD, unless authorized by Everett. Water must be distributed in accordance with the Everett *Water System Plan*, the CWSP, and the participants' individual water system plans, as approved by DOH. The service area for water deliveries is restricted to a defined area of the County based on Everett's regional service area (the City's retail water service area lies within the area described). The agreement also contains provisions related to the quality of the water delivered, rates and charges, payments, construction, operations, and maintenance.

Debt Service Agreement between Marysville and the Tulalip Tribes

This agreement defines the terms of payment from the Tulalip Tribes to the City for principal and interest related to the Tribes' capacity in the pipeline constructed under the terms of the JOA. The agreement includes a promissory note and a payment schedule as attachments.

Wheeling Agreement between Marysville and the Tulalip Tribes

This 1995 agreement defines the terms and conditions related to delivery of water from the JOA pipeline to the Tulalip Tribes via the City's water system (i.e., "wheeling" through the Marysville system). Wheeling is necessary because the point of delivery from Everett is at the southeast corner of the City's water system, while the points of delivery from the City to the Tulalip Tribes are along the west side of the City's water system. The agreement includes several sections, defining various aspects of the wheeling arrangement. It addresses the potential need for the City to acquire certain distribution facilities from the Tribes, in the event the City's Coordinated Water Service Area is extended into the Tribes' service area. It establishes conditions for potential construction of a transmission line to be owned by the Tribes and located within City boundaries. It identifies two connection points between the City's water system and the Tribes' water system, located at 88th Street NE and Marine Drive. The quantity of water to be delivered is also defined. The agreement establishes a Storage Deficiency Demand Charge, to address any deficiency in storage on the part of the Tribes related to differentials between the instantaneous flow and the 24-hour average flow rate needed. It defines terms and conditions related to a master meter for measuring flows to the Tribes. It provides that the City will make "every reasonable effort" to deliver water equal in quality to the water delivered by Everett to the City. It provides that the Tribes will compensate the City through payment of a "JOA Water Rate" and a "wheeling charge." A formula for calculation of each charge is given in the agreement.

Water Supply Agreement between Marysville and Snohomish PUD

This 2003 agreement, amended in 2011 and 2012, resolved issues regarding the PUD's service area and capacity rights to the JOA pipeline. Originally, Snohomish County PUD and the City shared equal rights for 7.21 percent of the pipeline capacity, which was designated as supply for an area of overlap between the two entities' service areas (referred to as the "Marysville/PUD Overlap area"). The agreement states that the PUD will convey to the City all of its distribution facilities located within the overlap service area at such time as the City extends its corporate boundaries to the overlap area and makes such request to the PUD. The Sunnyside-Whiskey Ridge Annexation was approved by Ordinance No. 2661 in 2006. This annexation extended the City's corporate boundaries into the Marysville/PUD overlap water service area. The City subsequently made a formal request to the PUD to transfer its distribution facilities in accordance with the terms of the water supply agreement. It took several years for the City and the PUD to work through the legal process and agree upon a sales price. Once these two steps were completed, the City constructed water infrastructure improvements so that the PUD overlap area could be transferred to the City, and a physical separation from the PUD and connection to the City could be accomplished. The

City began providing water service to the Sunnyside-Whiskey Ridge annexation area on January 1, 2014. There are no other remaining areas of overlap with Snohomish PUD.

OTHER AGREEMENTS

In addition to the agreements described above, the City has executed agreements with other water systems in Snohomish County. These agreements are summarized below and included in **Appendix C**.

Interlocal Agreement with City of Arlington for Easement, Water Purchase, and Intertie

This 1978 agreement provides for an easement for the City's transmission line from the Stillaguamish River, crossing City of Arlington property near the Arlington Airport. The agreement also provides for sale of water to Arlington to serve the Arlington Airport, west of Runway No. 16-34, and discusses rates and additional terms and conditions of this sale. It also provides for an intertie for emergency purposes between the two systems. The City no longer sells water to or operates interties with Arlington.

Water Supply Contract with Warm Beach Water Association

This 1993 agreement provides for delivery of water to Warm Beach from the Lake Goodwin Well, consistent with the terms of the CWSP. Marysville agrees to make best efforts to deliver 200,000 gpd, but delivery is subject to meeting the needs of the City's own retail customers. Warm Beach retained the right to develop its own independent source of supply. The terms of the contract extended through December 31, 2013, but was not extended beyond this date.

Mutual Aid Agreement

The City is party to a 1995 "Sewer and Water Mutual Aid Agreement" that addresses sharing of personnel and equipment during emergency conditions. Such mutual aid is authorized in State law, in Chapter 39.34 RCW. Other parties to the agreement include the Cities of Edmonds, Everett, Lynnwood, and Monroe, and the following special districts: Alderwood Water and Wastewater District, Cross Valley Water District, Mukilteo Water District, Olympic View Water and Sewer District, and Silver Lake Water District. Further information is provided in the City's Contingency Plan for Water Supply Disruptions During Emergencies in **Appendix D**.

Annexation and Service Area Settlement Agreement

An Annexation and Service Area Settlement Agreement was executed in 1996 by the City, the City of Arlington, and Snohomish County Fire District 12, as a negotiated agreement to resolve litigation related to the City's service area. The agreement identifies separate urban growth boundaries for the two cities, subject to approval by the County. It discusses certain land use issues, particularly with reference to the Arlington Airport area. It identifies water and sewer utility service areas, and certain areas that are designated for further study. It also states that the City will continue to provide water and sewer service to the Smokey Point area, under certain conditions. The agreement contains a number of other provisions as well, on topics not directly related to water service.

Agreement with Arlington for the Assumption of a Portion of the Marysville Utility System and to Provide Wholesale Water

This 1998 agreement addresses wholesale water service from the City to Arlington for the area north of 180th Street Northeast and east of I-5. Provisions related to water service include transfer of certain water facilities to Arlington, and agreement that the City will provide water as needed for

service and fire flows to Arlington in the Smokey Point area. The peak day demand to be met is 175,000 gpd. The agreement also establishes a water rate for this service. Arlington has recently purchased this portion of the City's water system, and now serves this area with its own supply.

SATELLITE SYSTEM MANAGEMENT

A Satellite System Management Agency (SSMA) is defined as a person or entity that is certified by the DOH to own or operate more than one public water system without the necessity for a physical connection between such systems. SSMAs were created to stop the proliferation of small water systems, many of which could not meet federal and state water quality and water system planning regulations. Based on the success of SSMAs, DOH made recommendations to the legislature to include rules for designating entities as qualified SSMAs.

In July 1995, Senate Bill 5448 became law, governing approval of new water systems and setting forth requirements for SSMAs. The goal of the law is to ensure that the people of Washington State will receive safe and reliable water supplies in the future from professionally managed or properly operated water systems. SSMAs can provide three different levels of service:

1. Ownership of the satellite system;
2. Operations and management of the satellite system; or
3. Contract services only.

The service can be provided to new systems, existing systems that are no longer viable, or existing systems placed into receivership status by DOH.

The City is responsible for providing water service to all customers in the City's water service area defined in the CWSP. Currently, the Ottercrest Estates Water System is nested within the City's existing retail water service area; the Smith Gardens Water System is located inside the City's future water service area; and a number of other small water systems are located nearby but outside the City's existing and future water service areas, as shown in **Figure 2-3**. Excepting these small systems, all of the areas surrounding the City's service area are currently being served by large, stable water systems that are unlikely to be future satellite water systems operated by the City.

In the event that a neighboring water system needs the City's assistance, the City will cooperate to provide the necessary satellite management services. Upon agreement between the two systems, the City will pursue the necessary steps to become an approved SSMA. These include:

- Submitting a notice of intent to the DOH;
- Participating in a pre-submittal meeting with the DOH;
- Submitting a SSMA plan to the DOH that meets the plan requirements; and
- Obtaining approval of the plan from the DOH.

ADJACENT WATER SYSTEMS

Numerous water systems are adjacent or close to the City's water service area. **Figure 2-3** shows the regional water supply setting, including the City and other purveyor service areas. **Table 2-9** lists details of all purveyors shown on **Figure 2-3**.

Table 2-9
Adjacent Systems

Water System Name	Approximate Location	Approximate Number of Service Connections	Source of Supply
Arlington Terrace	North of Marysville Water Service Area	28	2 groundwater wells
Arlington Fuel Stop Inc.	North of Marysville Water Service Area, just west of I-5	1	1 groundwater well
Battle Creek Golf Course Water System	West of Marysville Water Service Area	2	1 groundwater well
Cascade Crest Water System	West of Marysville Water Service Area	22	1 groundwater well
Cedar Springs Camp	East of Marysville Water Service Area	68	1 groundwater well
Chealco Water Supply	West of Marysville Water Service Area	28	1 groundwater well
City of Arlington	Northern border of Marysville Water Service Area	6,437	4 groundwater wells, 1 intertie with Snohomish County PUD
City of Everett	Across Steamboat Slough from Marysville	26,172	1 surface water source
Donna's Mini Market Water System	Just west of Marysville Water Service Area	2	1 groundwater well
Forest Grove Mobile Home Park	West of Marysville Water Service Area, near Forty Five Road	26	2 groundwater wells
Gays Water District Association	West of Marysville Water Service Area	29	1 groundwater well
Green Acres Day Care	Northwest of Marysville Water Service Area	2	1 groundwater well
Happy Hill Community Club	East of Marysville Water Service Area	25	2 groundwater wells
Indian Ridge Water Association	West of Marysville Water Service Area	72	1 groundwater well
Kathann Estates Water Association	West of Marysville Water Service Area	49	1 groundwater well
Kingston Water System	West of Marysville Water Service Area	16	2 groundwater wells
Lake Ki Sunrise Addition Water Company	West of Marysville Water Service Area	32	2 groundwater wells
Marysville Estates-Aqua Hills Water System	West of Marysville Water Service Area	49	2 groundwater wells, 1 intertie with Tulalip
Mc Pherson Hills Water	Northeast of Marysville Water Service Area	11	1 groundwater well

Table 2-9
Adjacent Systems (continued)

Water System Name	Approximate Location	Approximate Number of Service Connections	Source of Supply
Meridian Water System	West of Marysville Water Service Area	29	1 groundwater well
New Start Landowners Association	Northeast of Marysville Water Service Area	26	1 groundwater well
Ottercrest Estates Water System	Inside Marysville City Limits	13	1 groundwater well
Pilchuck Riviera #2	Southeast of Marysville Water Service Area	32	1 groundwater well
Priest Point Beach Water, Inc.	West of Marysville Water Service Area	70	3 groundwater wells
Roseland Community Club	East of Marysville Water Service Area	70	3 groundwater wells
Sam Lake Improvement Association	West of Marysville Water Service Area	65	1 groundwater well
Seattle Rifle and Pistol	Southeast of Marysville Water Service Area	2	1 groundwater well
Seven Lakes Water Association	Western border of Marysville Water Service Area	2,223	6 groundwater wells
Seven Oaks Driving Range	East of Marysville Water Service Area	1	1 groundwater well
Silvana Water Association	Northwest of Marysville Water Service Area	130	1 groundwater spring
Sisco Heights Community Church	East of Marysville Water Service Area	3	1 groundwater well
Smith Gardens Water System	East of Marysville City Limits	1	1 groundwater well
Snohomish County PUD (Integrated System)	Eastern border of Marysville Water Service Area	18,782	2 groundwater wells, 12 interties with City of Everett
Snohomish County PUD (Lake Goodwin)	Northwest of Marysville Water Service Area	N/A	N/A
Snug Harbor MHC	West of Marysville Water Service Area	30	2 groundwater wells
Sudden View	Northeast of Marysville Water Service Area	21	1 intertie with Snohomish County PUD - Lake Stevens
Tulalip Indian Reservation	Western border of Marysville Water Service Area	N/A	N/A
Tulalip LDS Church	West of Marysville Water Service Area	1	1 groundwater well

Five major adjacent purveyors, which include the City of Everett, the Tulalip Tribes, the Snohomish County Public Utility District No. 1 (Snohomish County PUD), the City of Arlington, and the Seven Lakes Water Association are described below in additional detail. Growth, regionalization of water supply, and the JOA require coordination and cooperation among all of these purveyors.

CITY OF EVERETT

The Everett service area is located south of Marysville and across the Steamboat Slough and Snohomish River. In addition to its own service area, the Everett water system also provides wholesale water to Monroe, Snohomish, Lake Stevens, Alderwood Water and Wastewater District, the Snohomish County PUD, and 52 other water districts and water associations.

In 1991, the Tulalip Tribes, Snohomish County PUD, and the City participated in JOA No. 1, a regional supply from the Everett transmission mains connecting to the City's distribution system at 44th Street NE and 83rd Avenue NE.

TULALIP TRIBES

The Tulalip Reservation system serves an area of approximately 24 square miles, located west of and contiguous with the City's service area, from Steamboat Slough north to Fire Trail Road. The original water sources serving the Tulalip Tribes include a surface water spring, a well system, and a single connection to the City's system. A portion of the Reservation east of Quilceda Creek and the subdivision of Marysville West is served by the City.

In 1991, the Tribes participated in the JOA, which allows three connections to the City's system. The Tribes purchased capacity rights in the pipeline equal to 4.09 MGD, which is valid until the year 2020. The JOA agreement acknowledges that in order for the Tribes to use the capacity, the Tribes would wheel water through the City's distribution system connecting to the Tribes' distribution system west of I-5 at 4th Street NE, 88th Street NE, and 116th Street NE.

SNOHOMISH COUNTY PUD NO. 1

The Snohomish County PUD service area is contiguous with the east boundary of the City along Highway 9. Snohomish County PUD is also a participant in the JOA and is connected to the 30-inch water pipeline (JOA supply pipeline) at 28th Street NE (Soper Hill Road) and 83rd Avenue NE. This connection is metered and has a maximum flow of 2,500 gpm.

Originally, Snohomish County PUD purchased capacity equal to 3.42 MGD according to the JOA agreement, which was valid until 2020. In addition, Snohomish County PUD had equal rights (with the City) to 7.21 percent of the JOA supply pipeline capacity, which was designated for the Marysville/PUD overlap area. In 2003, Snohomish County PUD entered into an agreement with the City that transferred rights to capacity specified in the JOA as the Marysville/PUD overlap area to the City. Therefore, the City now has purchased 63.65 percent of the capacity of the JOA supply pipeline, which is equivalent to 13.15 MGD, and has agreed to serve customers in the Marysville/PUD overlap area.

In addition to the JOA connection at Soper Hill Road, the Snohomish County PUD has an intertie with the City on the northeast corner of the intersection. The valves are currently closed at this location, but could be opened if the City lost water supply.

CITY OF ARLINGTON

The City's northern service area boundary is contiguous with the City of Arlington water service area boundary. The cities of Marysville and Arlington have two interties, neither of which are active.

A 1978 interlocal agreement for water purchased/utility intertie identified one point of connection in the Arlington airport vicinity. This connection is no longer active.

In 1998, the City and Arlington executed a service area settlement agreement that gave Arlington the option of purchasing the City's water system north of 180th Street NE. Per the 1998 agreement, an 8-inch master meter was installed at 180th Street NE and Smokey Point Boulevard with the City agreeing to deliver 70,000 gpd with a peak daily demand of 175,000 gpd. Since then, Arlington has purchased the portion of the City's system north of 180th Street on Smokey Point Boulevard and now services this area with its own supply.

SEVEN LAKES WATER ASSOCIATION

The Seven Lakes Water Association is located to the west of the City's water system. The City previously had an intertie with the Association, but it was removed in 2008.

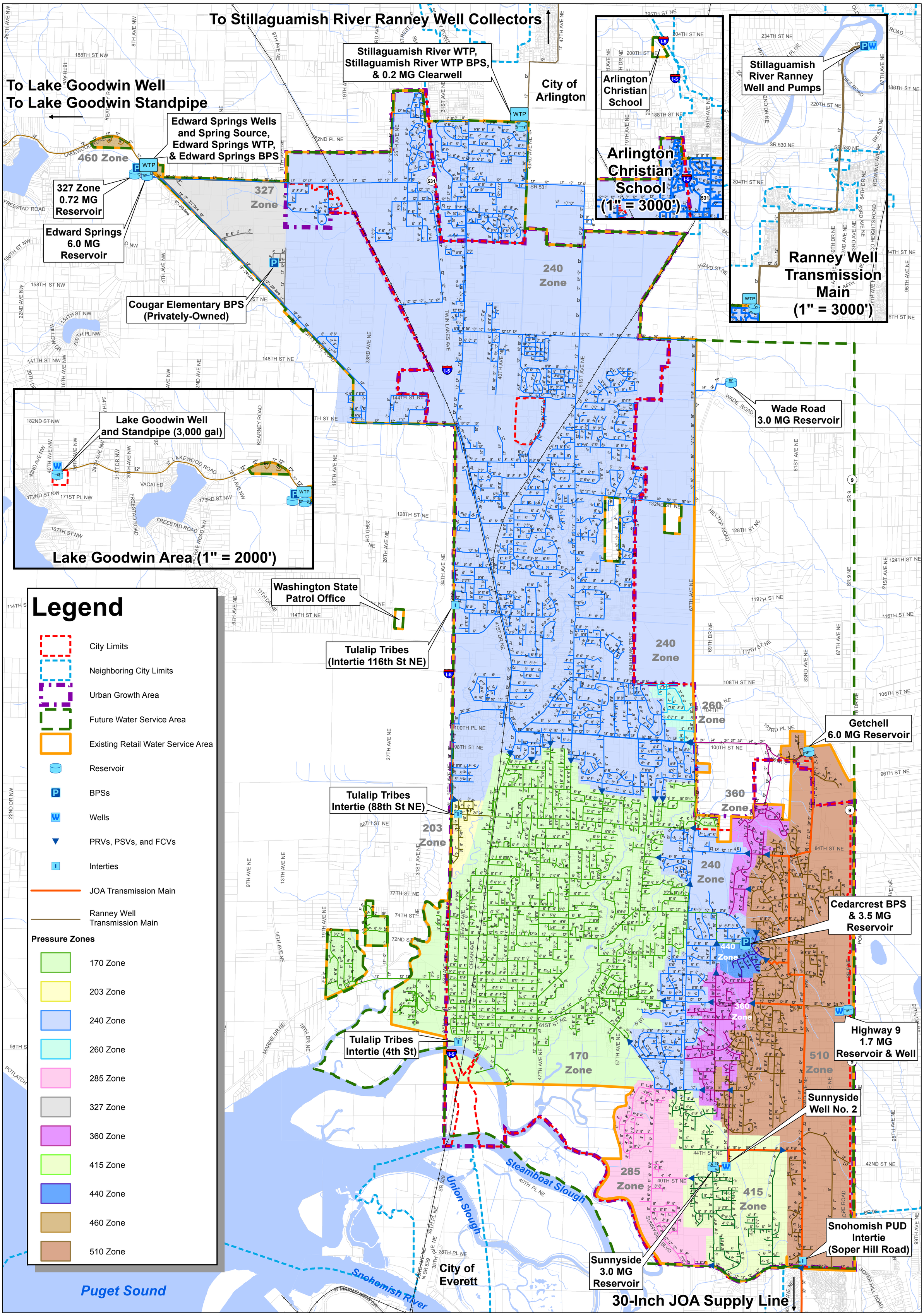

\\rh2\dfs\Bothell\Data\MAR\114-084\GIS\Maps\Figure 2-1 ExWsys.mxd By:gdavidson Plot Date: 5/27/2016 Coordinate System: NAD 1983 StatePlane Washington North FIPS 4601 Feet

NORTH

1 inch = 2,000 feet

0 1,000 2,000 4,000 Feet

DRAWING IS FULL SCALE WHEN BAR MEASURES 2"

RH2 ENGINEERS

CITY OF Marysville WASHINGTON

Figure 2-1
Existing Water System
City of Marysville
2016 Water System Plan

Vicinity Map

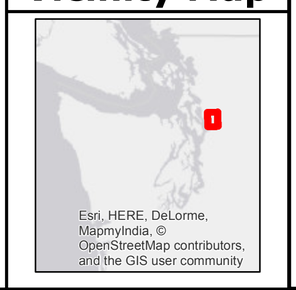

This map is a graphic representation derived from the City of Marysville Geographic Information System. It was designed and intended for City of Marysville staff use only; it is not guaranteed to survey accuracy. This map is based on the best information available on the date shown on this map.

Any reproduction or sale of this map, or portions thereof, is prohibited without express written authorization by the City of Marysville.

This material is owned and copyrighted by the City of Marysville.

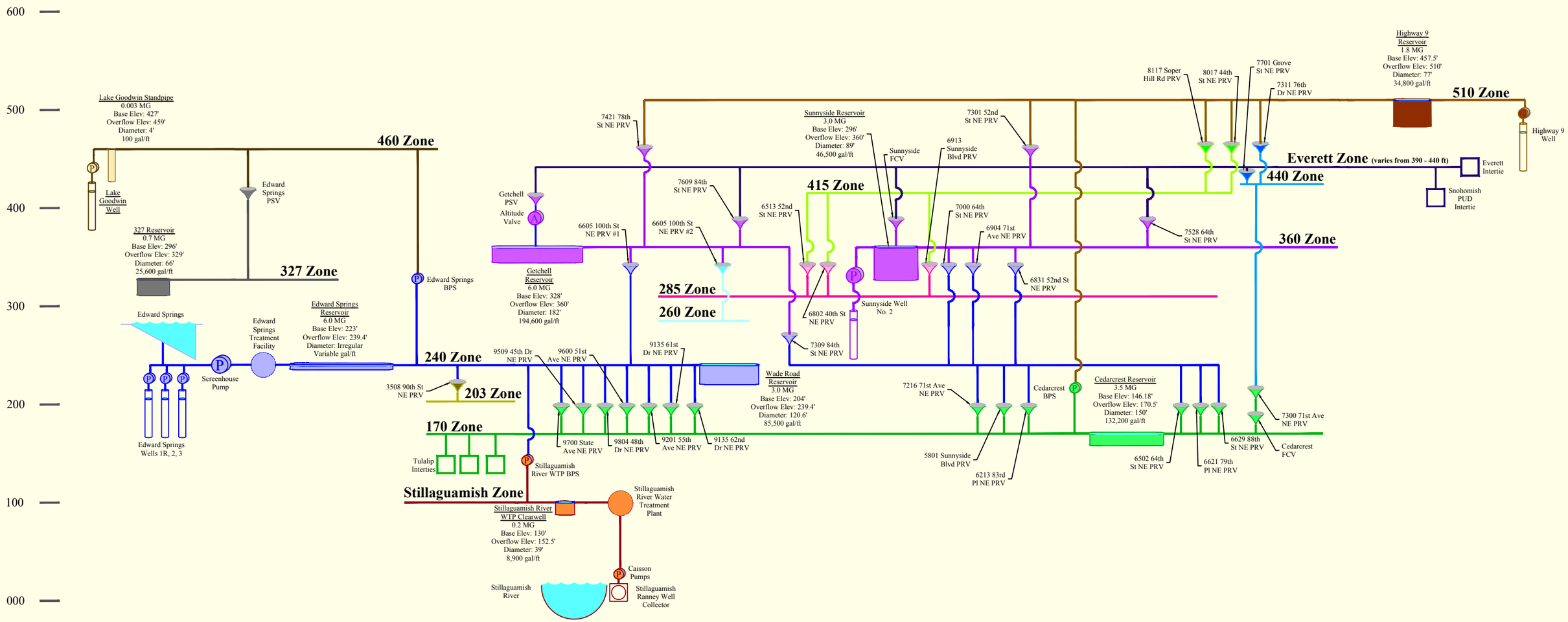

Legend

170 Zone	327 Zone	Everett Zone	Intertie
203 Zone	360 Zone	Well Pump	
240 Zone	415 Zone	Booster Pump Station	
260 Zone	440 Zone	Pressure Reducing, Sustaining, or Flow Control Station	
285 Zone	460 Zone	Altitude Valve	
Stillaguamish Zone	510 Zone		

City of Marysville
Water System Plan

Figure 2-2
Existing Hydraulic Profile

Date: MAY 25, 2016 File: MAR\114-084\CAD\FIG 2-2.DWG

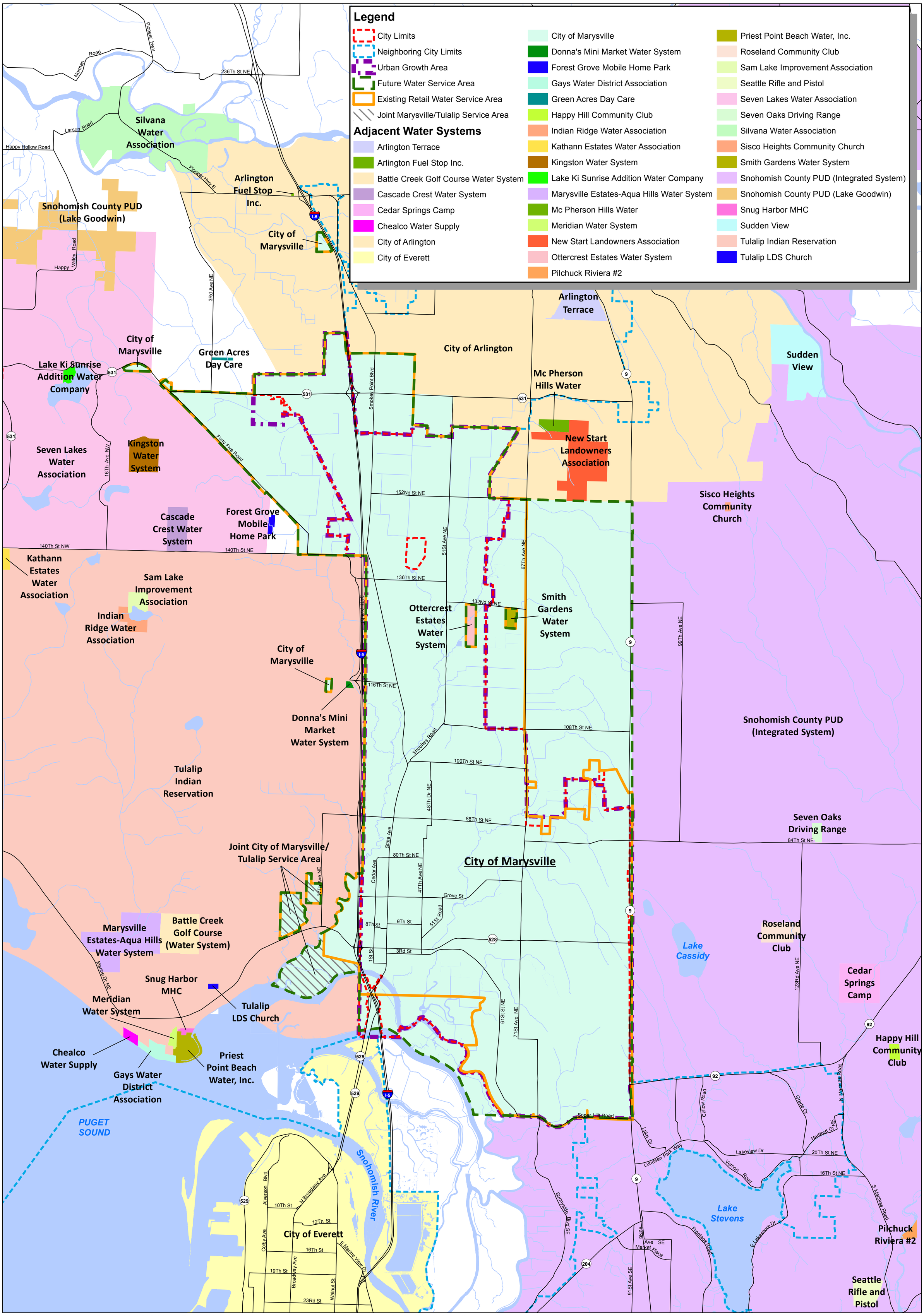

\\rh2\dfs\Bothell\Data\MAR\114-084\GIS\Maps\Fig 2-3 Adj Sys.mxd By:gdavidson Plot Date: 5/27/2016 Coordinate System: NAD 1983 StatePlane Washington North FIPS 4601 Feet

NORTH

1 inch = 3,000 feet

0 1,500 3,000 6,000 Feet

DRAWING IS FULL SCALE WHEN BAR MEASURES 2"

Figure 2-3
Water Service Area and Adjacent Water Systems
City of Marysville
2016 Water System Plan

Vicinity Map

This map is a graphic representation derived from the City of Marysville Geographic Information System. It was designed and intended for City of Marysville staff use only; it is not guaranteed to survey accuracy. This map is based on the best information available on the date shown on this map.

Any reproduction or sale of this map, or portions thereof, is prohibited without express written authorization by the City of Marysville.

This material is owned and copyrighted by the City of Marysville.

3 | LAND USE AND POPULATION

INTRODUCTION

The City of Marysville's *Comprehensive Plan* was originally adopted in 1996, and was last updated in 2015. The plan was developed to meet the requirements of the State of Washington GMA. The GMA requires, among other things, consistency between land use and utility plans and their implementation. This chapter demonstrates the compatibility of the City's WSP with other plans, identifies the designated land uses within the existing and future service area, and presents population projections within the City's planning area.

COMPATIBILITY WITH OTHER PLANS

INTRODUCTION

To ensure that the WSP is consistent with the land use policies that guide it and other related plans, the following planning documents were examined.

- Growth Management Act
- City of Marysville *Comprehensive Plan*
- Snohomish County *Comprehensive Plan*
- North Snohomish County *Coordinated Water System Plan*

GROWTH MANAGEMENT ACT

The State of Washington GMA of 1990 (and its multiple amendments) defined four goals relevant to this WSP:

1. Growth should be in urban areas;
2. There should be consistency between land use and utility plans and their implementation;
3. There should be concurrency of growth with public facilities and services; and
4. Critical areas should be designated and protected.

Urban Growth Area

The GMA requires that Snohomish County and the City cooperate in designating an Urban Growth Area (UGA) adjacent to the City's existing corporate limits. The City's UGA was originally established in 1995 by the Snohomish County Council, and was updated in 1997 when the Smokey Point UGA was divided between Arlington and the City. As part of the development of its most recent *Comprehensive Plan* update, the City has developed recommendations for land use designations within the UGA, and potential expansion areas, to accommodate the City's projected population growth and employment targets for a 20-year planning period. The current UGA is shown in **Figure 3-1**.

Consistency

The GMA requires planning consistency from two perspectives. First, it requires consistency of plans among jurisdictions. This means that plans and policies of the City and County must be consistent per RCW 36.70A.100. Second, the GMA requires the implementation of the plan be consistent with the comprehensive plans (RCW 36.70A.120).

The 2003 Municipal Water Law also requires that water system plans are consistent with local plans and regulations. The signed Consistency Statement Checklists included in **Appendix E** from the City and Snohomish County Planning Departments document the determination that this WSP is consistent with their plans and regulations.

Concurrency

Concurrency means that adequate public facilities and services be provided at the time growth occurs. For example, growth should not occur where schools, roads, and other public facilities are overloaded. To achieve this objective, the GMA directs growth to areas already served or readily served by public facilities and services (RCW 36.70A.110). It also requires that when public facilities and services cannot be maintained at an acceptable level of service, the new development should be prohibited (RCW 36.70A.110).

Critical Areas

The GMA requires that critical areas be designated and protected. Critical areas include aquifer recharge areas, wetlands, frequently flooded areas, streams, and steep slopes. The City has adopted development regulations identifying and protecting critical areas as required. Designated critical areas and geologic hazards within the City's water service area are shown in **Figure 3-2**. The SEPA Checklist in **Appendix F** addresses other environmental concerns.

CITY OF MARYSVILLE COMPREHENSIVE PLAN

The Land Use Element of the City's *Comprehensive Plan* is the City's vision of how growth and development should occur over a 20-year horizon. While the Land Use Element goals and policies set forth general standards for locating land uses, the Land Use Map, which is shown in **Figure 3-1**, indicates geographically where certain types of uses may be appropriate. The Land Use Map is a blueprint for development of an area, whereas the zoning map and zoning code are the regulatory means for implementing development.

The Land Use Element considers the general location of land uses, as well as the appropriate intensity and density of land uses given the current development trends. The utilities, transportation, and capital facilities elements ensure that new development will be adequately serviced without compromising adopted levels of service, similar to the principal of concurrency as defined in the GMA. The City's WSP was reviewed and taken into consideration during the development of, and subsequent revisions to, the Capital Facilities Plan section of the *Comprehensive Plan*. The Capital Facilities Plan is updated annually.

SNOHOMISH COUNTY COMPREHENSIVE PLAN

The County adopted its *Comprehensive Plan* on June 28, 1995. The plan took effect on July 10, 1995. Since that time, the Plan has been amended several times to incorporate UGA changes, capital

facility plan changes, and land use changes. The current version of the Plan was adopted in 2015, and consists of the following five sections.

- General Policy Plan
- Future Land Use Map
- Transportation Element
- Capital Facilities Plan
- Parks and Recreation Element

The County's *Comprehensive Plan* guides development in rural, unincorporated Snohomish County and designates land use in the unincorporated UGA. Similar to the City's *Comprehensive Plan*, the County's plan contains the following land use goals, which:

> …form the basis of the County's land use strategy and:
>
> - provide for a supply and distribution of land use types to accommodate the majority of county population and employment growth within urban growth areas;
> - reduce land consuming urban development patterns and provide structure for urban development within neighborhoods or urban centers;
> - reduce development pressures and patterns of sprawl within rural areas;
> - conserve agricultural, forest and mineral resource lands of long-term commercial significance; and
> - preserve and protect open space, scenic and cultural resources.

NORTH SNOHOMISH COUNTY COORDINATED WATER SYSTEM PLAN

The North Snohomish County *Coordinated Water System Plan* (CWSP), originally dated October 1991, and updated in December 2010, was developed under direction of the County's Water Utility Coordinating Committee (WUCC), the County, Tulalip Tribes, and Snohomish County Public Utility District No. 1 (PUD). The members of the WUCC represent the collective efforts of all public water systems with more than ten service connections that provide service within the Critical Water Supply Service Area (CWSSA). The Snohomish County Council declared North Snohomish County a CWSSA on October 19, 1988.

The purpose of the CWSP is to assist the area's water utilities in establishing an effective process for planning and developing public water systems, and restricting the proliferation of small public water systems. The CWSP accomplishes this by establishing future service area boundaries, minimum design standards, service review procedures, appeals procedures, long-term regional water supply strategies, a water use efficiency program and goals, and the satellite system management program. As can be seen in the following sections of this WSP, the City has established policies, design criteria, and goals that meet or exceed the requirements and goals of the CWSP.

LAND USE

The City limits currently encompass an area of approximately 13,370 acres, or 20.9 square miles. The City's UGA encompasses an additional 158 acres outside of the current City limits, for a total area of 21.14 square miles. The existing retail water service area includes most of the City and UGA (although some areas in the City and UGA are not served), as well as some areas outside the UGA, for a total of 16,022 acres, or 25.0 square miles. The City's Land Use Map, shown in **Figure 3-1**, guides development within the City and its UGA. Land use outside the UGA is designated by the County, as shown in **Figure 3-1**.

Approximately 66.0 percent of the area within the current City limits is designated for residential use, as indicated in **Chart 3-1**. Approximately 13.9 percent is designated for commercial land, approximately 13.6 percent is designated for industrial land, and approximately 6.5 percent is designated for public facilities and open space.

Chart 3-1
Land Use Inside City Limits

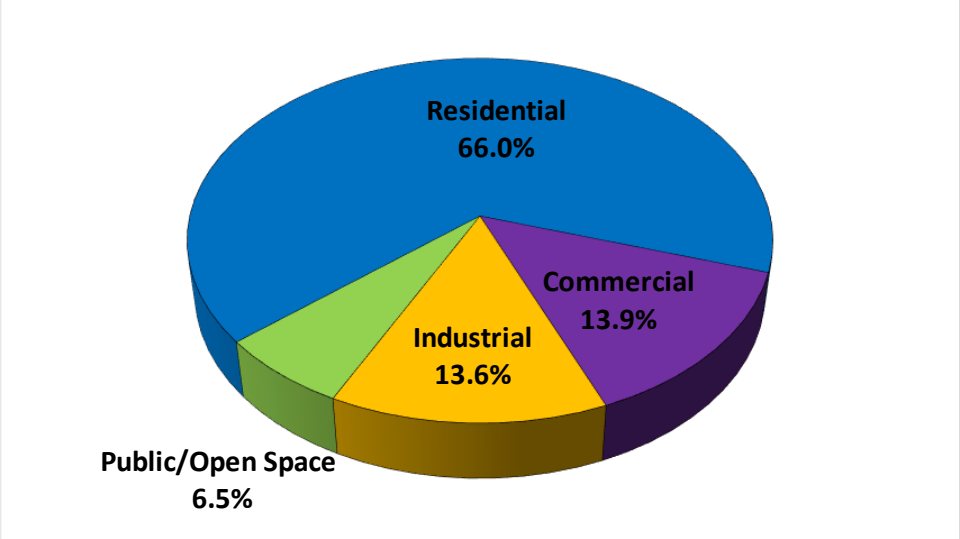

Within the City's unincorporated UGA and outside of the City limits, approximately 40.7 percent of the land area is designated for industrial use, as shown in **Chart 3-2**. Approximately 34.7 percent of the land area is designated for commercial use, and the remaining 24.6 percent is designated for residential use.

Chart 3-2
Land Use inside UGA (Outside City Limits)

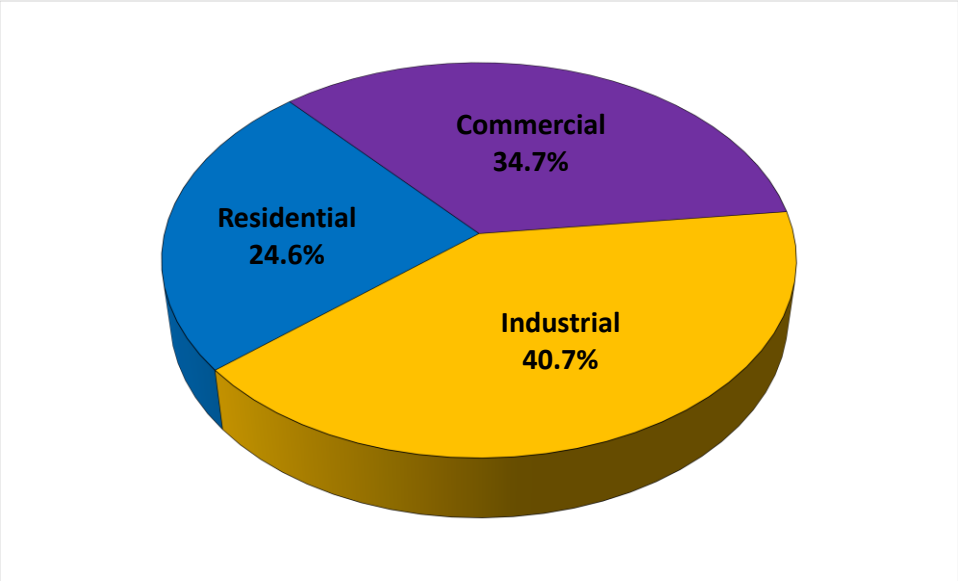

The land area in the existing retail water service area outside the City limits and UGA is comprised of several land uses. Residential use is designated to approximately 75.0 percent of the total land area, as indicated in **Chart 3-3**. Commercial use (reservation commercial) comprises approximately 3.3 percent of the total land area, and other Tulalip Tribes land comprises approximately an additional 3.0 percent. City of Arlington land comprises approximately 16.6 percent of the land area. Smaller categories, including agriculture, right-of-way, and other types of land use, have been combined into the "Other" category, which makes up approximately 2.1 percent of the total land area.

Chart 3-3
Land Use inside Water Service Area (Outside City Limits and UGA)

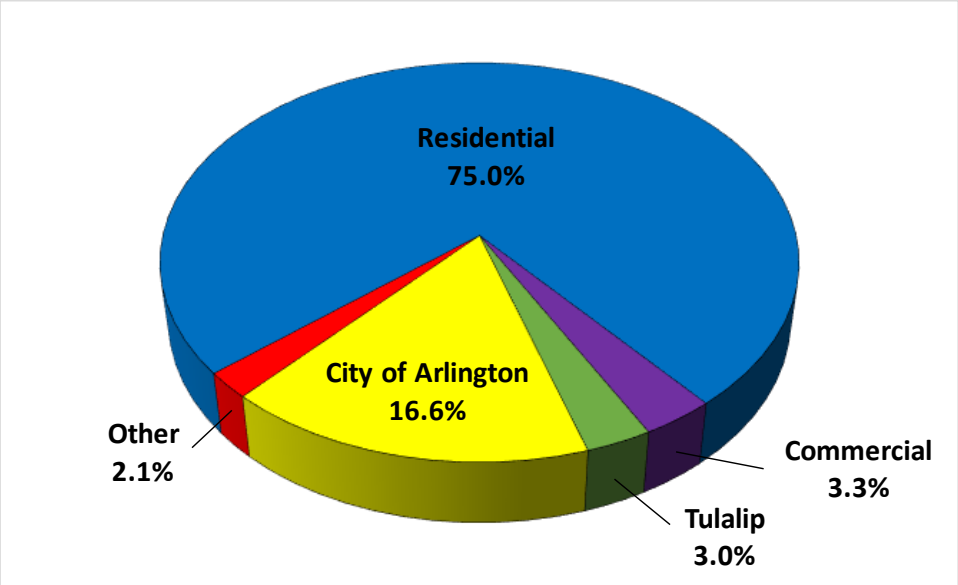

POPULATION

HOUSEHOLD TRENDS

The City's residential areas are comprised largely of single-family residences. In 2014, the Office of Financial Management (OFM) estimated that 17,948 housing units in the City, or 77 percent, were single-family residential; approximately 4,091 housing units, or 18 percent, were multi-family residential; and approximately 1,225 housing units, or 5 percent, were "mobile homes and specials."

OFM data from the 2010 Census indicates an average household size in the City of 2.80 persons per household, and an average household size in unincorporated Snohomish County of 2.74 persons per household. These numbers are used below for water system population projections. The average household size reported in the Census is based on an average of the household size for owner-occupied housing units and renter-occupied housing units. For the City, the average household size for owner-occupied units in 2010 was 2.80, and the average household size for renter-occupied units was also 2.80.

The City's 2015 *Comprehensive Plan* update indicates an average household size of 2.90 persons for single family housing unit, an average household size of 2.0 persons per multi-family housing unit, and an average household size of 1.2 persons per senior apartment housing unit. Since the 2015 *Comprehensive Plan* data was not available at the time of these analyses, the OFM data from the 2010 Census was used for the purposes of estimating the water service area population.

EXISTING AND FUTURE CITY POPULATION

The County has experienced rapid population growth and extensive physical developments since 2000. The population of the County increased by approximately 22 percent from 2000 to 2014, based on OFM estimates. The population of the City increased by approximately 147 percent during the same period, partly due to several annexations, including the Central Marysville Annexation in 2009, which added more than 20,000 new residents. **Table 3-1** illustrates the historical population growth since 2000, with years 1990 and 1995 included for reference.

Table 3-1
Population Trends within the City Limits

Year	Population
Historical	
1990	10,328
1995	18,268
2000	25,315
2001	26,912
2002	28,172
2003	29,072
2004	29,650
2005	30,507
2006	33,821
2007	37,875
2008	39,019
2009	39,628
2010	60,020
2011	60,660
2012	61,360
2013	62,100
2014	62,600

NOTE: The historical population represents the population within the City limits. The sources of the historical population numbers are the decennial census and Washington OFM intercensal estimates.

Projected future growth for the City limits and unincorporated UGA is shown in **Table 3-2**. The estimated 2014 population and projected 2035 population data were included as part of the City's 2015 *Comprehensive Plan*. The 2035 projection is from the Snohomish County Tomorrow planning process. Projected population for intermediate years was calculated by assuming a uniform population growth rate between 2014 and 2035. The projected 2036 population was calculated by applying this same growth rate to the projected 2035 population from the City's *Comprehensive Plan*. The total City and unincorporated UGA population is expected to experience an average annual growth rate of approximately 1.6 percent between the baseline of 2014 and 2035. Population projections for the City and unincorporated UGA are displayed in **Chart 3-4**.

Table 3-2
Population Projections for the City Limits and Unincorporated UGA and Water System

Year	Total City + UGA Population	Total Water System Population
	Projected	
2015	63,819	67,758
2016	64,845	68,848
2017	65,887	69,954
2018	66,947	71,079
2019	68,023	72,222
2020	69,117	73,383
2021	70,228	74,563
2022 (+ 6 years)	**71,357**	**75,762**
2023	72,504	76,980
2024	73,670	78,217
2025	74,854	79,475
2026 (+ 10 years)	**76,058**	**80,753**
2027	77,281	82,051
2028	78,523	83,370
2029	79,785	84,710
2030	81,068	86,072
2031	82,372	87,456
2032	83,696	88,862
2033	85,042	90,291
2034	86,409	91,743
2035	87,798	93,218
2036 (+ 20 years)	**89,210**	**94,716**

Note: Since the time of these analyses, the OFM esitmate of population in the City limits and UGA was published as 64,140.

Chart 3-4
Population Projections

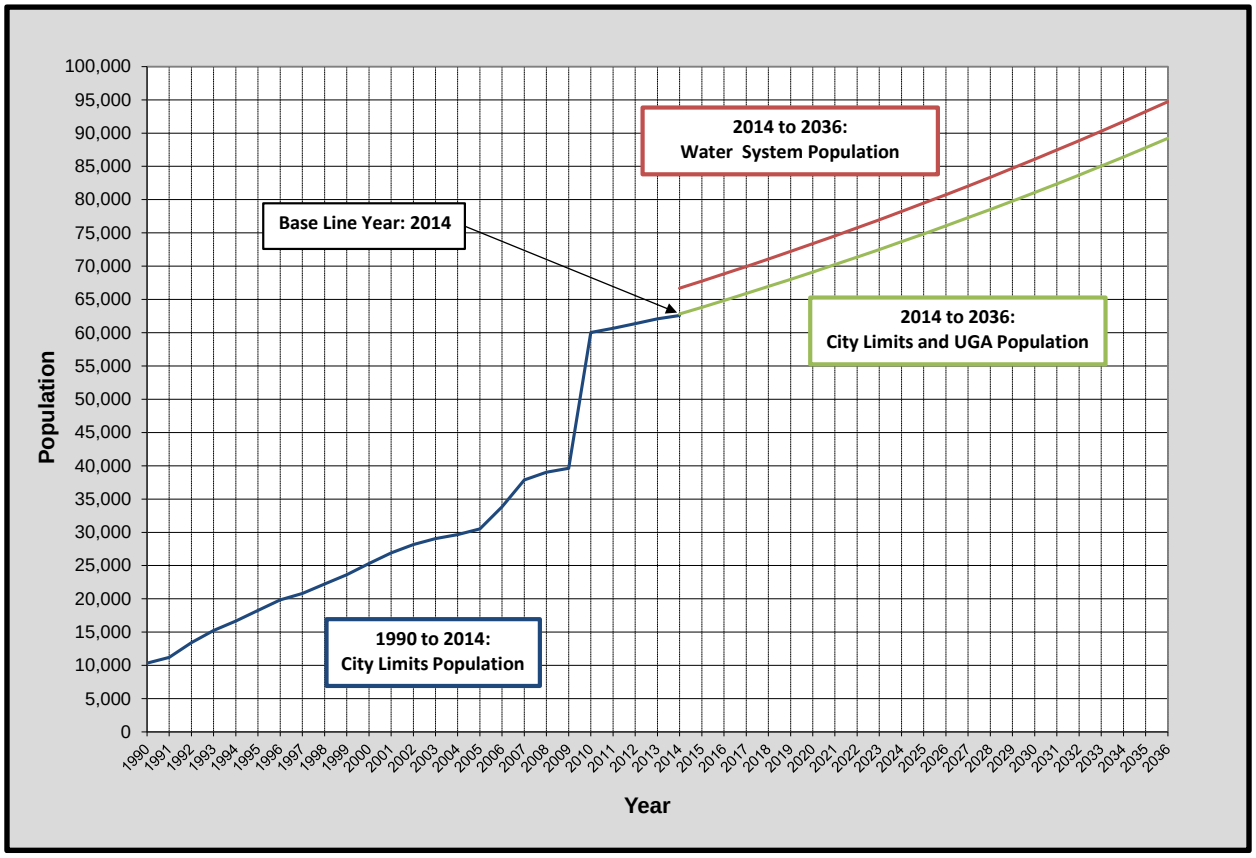

WATER SYSTEM POPULATION

The actual number of people served by the City's water system is different than that shown in **Tables 3-1** and **3-2**. The City currently serves part of the unincorporated UGA and there are areas within the City limits that are served by other water systems. The City also serves people outside of the unincorporated UGA within its water service area, as shown in **Figure 3-1**.

The population served in the City limits was calculated by subtracting the number of single-family residences inside the City limits, but outside the water service area, as well as the population of the Ottercrest Estates water system (which is located inside the City limits), multiplied by the average household size for the City (2.80 persons/household, per OFM), from the estimated 2014 population for the City limits from **Table 3-1**.

The population served outside the City limits was calculated in two steps. First, the number of single-family connections outside the City limits was multiplied by the average household size for unincorporated Snohomish County (2.74 persons/household, per OFM). This provided the served single-family population outside the City limits. Second, the number of multi-family connections outside the City limits was multiplied by the average population per multi-family connection inside the City limits, then adjusted by multiplying this total by the ratio of the unincorporated County average household size to the City average household size. This provided the served multi-family population outside the City limits.

The estimated existing population served for 2014 is provided in **Table 3-3**. The number of connections reported are single-family and multi-family connections as of December 31, 2014.

Table 3-3
Estimated 2014 Water System Population

Area Served	Number of Connections	Population Served
Inside City Limits	18,286	62,556
Outside City Limits	1,389	4,130
Total Population Served		**66,686**

To project the water system population forward, the estimated 2014 water system population from **Table 3-3** was utilized as a basis. The annual percentage change in population from **Table 3-2** was then used to project the water system population out to the end of the 20-year planning period. For the purposes of estimating demands, the population projections for the water system are presented in **Table 3-2**. The system is expected to provide service to approximately 94,716 people by 2036.

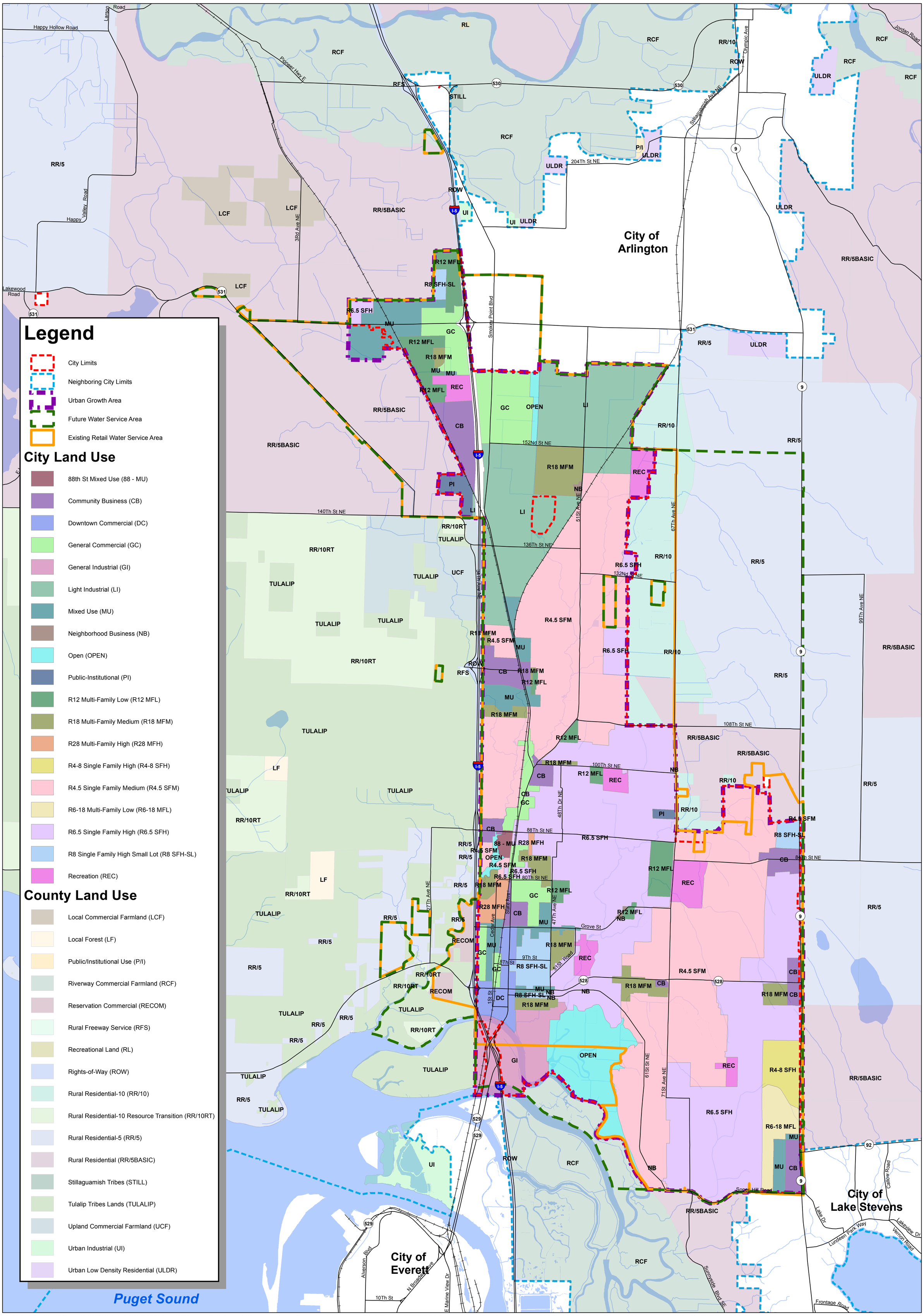

\\rh2\dfs\Bothell\Data\MAR\114-084\GIS\Maps\Figure 3-1 Land Use.mxd By:gdavidson Plot Date: 5/27/2016 Coordinate System: NAD 1983 StatePlane Washington North FIPS 4601 Feet

NORTH

1 inch = 2,500 feet

0 1,250 2,500 5,000 Feet

DRAWING IS FULL SCALE WHEN BAR MEASURES 2"

Figure 3-1
Land Use

City of Marysville
2016 Water System Plan

Vicinity Map

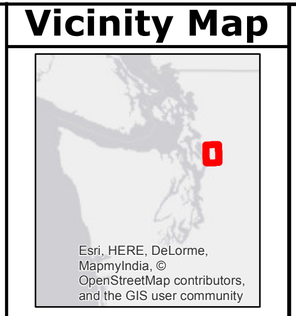

This map is a graphic representation derived from the City of Marysville Geographic Information System. It was designed and intended for City of Marysville staff use only; it is not guaranteed to survey accuracy. This map is based on the best information available on the date shown on this map.

Any reproduction or sale of this map, or portions thereof, is prohibited without express written authorization by the City of Marysville.

This material is owned and copyrighted by the City of Marysville.

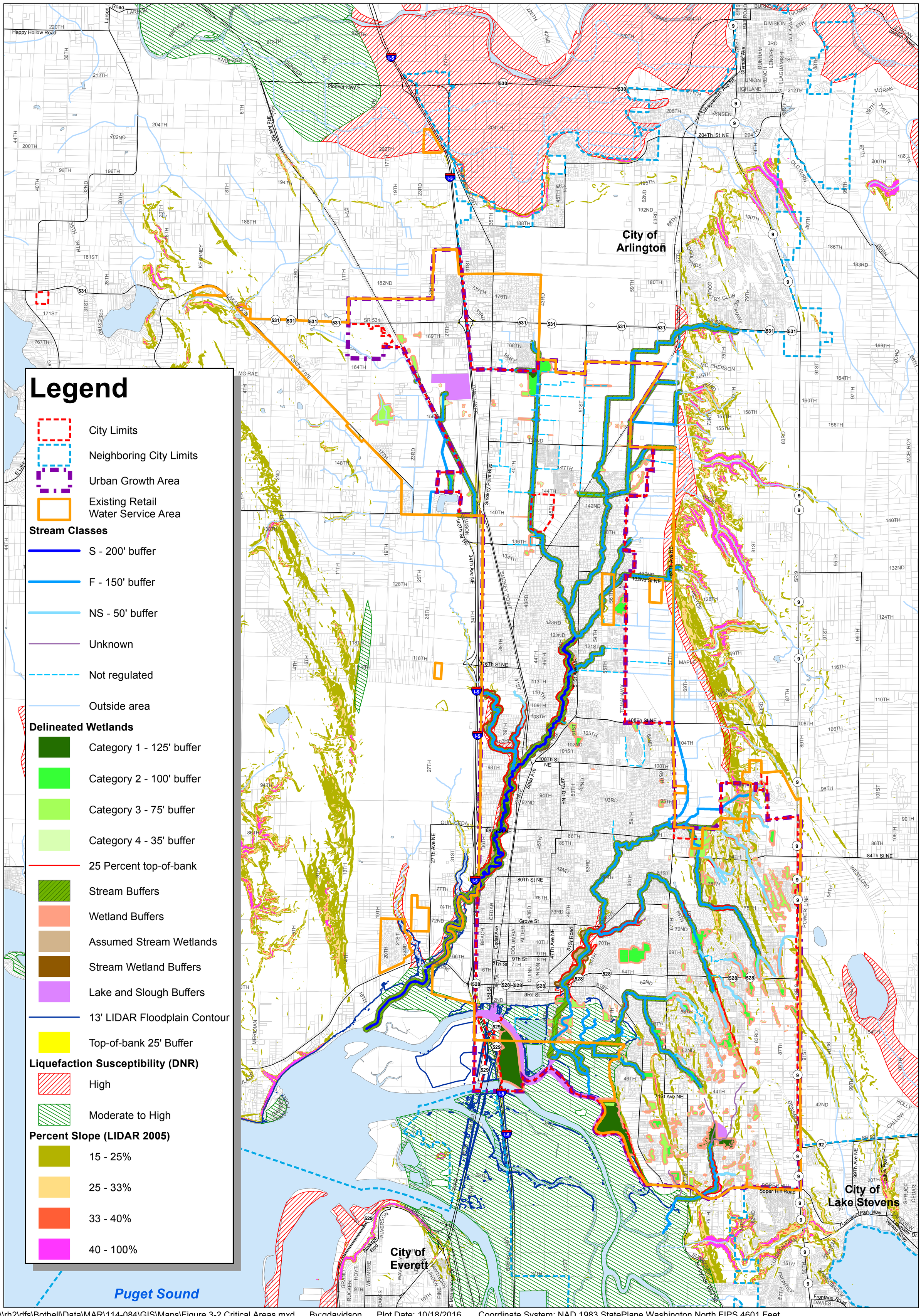

\\rh2\dfs\Bothell\Data\MAR\114-084\GIS\Maps\Figure 3-2 Critical Areas.mxd By:gdavidson Plot Date: 10/18/2016 Coordinate System: NAD 1983 StatePlane Washington North FIPS 4601 Feet

NORTH

RH2 ENGINEERS PLANNERS SCIENTISTS

1 inch = 2,500 feet

0 1,250 2,500 5,000 Feet

DRAWING IS FULL SCALE WHEN BAR MEASURES 2"

CITY OF Marysville WASHINGTON

Figure 3-2
Critical Areas
City of Marysville
2016 Water System Plan

Vicinity Map

This map is a graphic representation derived from the City of Marysville Geographic Information System. It was designed and intended for City of Marysville staff use only; it is not guaranteed to survey accuracy. This map is based on the best information available on the date shown on this map.

Any reproduction or sale of this map, or portions thereof, is prohibited without express written authorization by the City of Marysville.

This material is owned and copyrighted by the City of Marysville.

4 | WATER DEMANDS

INTRODUCTION

A detailed analysis of system demands is crucial to the planning efforts of a water supplier. A demand analysis first identifies current demands to determine if the existing system can effectively provide an adequate quantity of water to its customers under the most crucial conditions, in accordance with federal and state laws. A future demand analysis identifies projected demands to determine how much water will be needed to satisfy the water system's future growth and continue to meet federal and state laws.

The magnitude of water demands is typically based on three main factors: 1) population; 2) weather; and 3) water use classification. Population and weather have the two largest impacts on water system demands. Population growth has a tendency to increase the annual demand, whereas high temperatures have a tendency to increase the demand over a short period of time. Population does not solely determine demand because different user types use varying amounts of water. The use varies based on the number of users in each customer class, land use density, and irrigation practices. Water use efficiency efforts also impact demands and can be used to accommodate a portion of the system's growth without increasing a system's supply capacity.

Demands on the water system determine the size of storage reservoirs, supply facilities, water mains, and treatment facilities. Several different types of demands were analyzed and are addressed in this chapter, including average day demand, maximum day demand, peak hour demand, fire flow demand, future demands, and a demand reduction forecast based on the Water Use Efficiency program.

CERTIFICATE OF WATER AVAILABILITY

In accordance with the requirements of the GMA, the City must identify that water is available prior to issuing a building permit. Per Marysville Municipal Code 14.32.035, any property within the City's UGA or utility service area must be annexed to the City before a letter of water availability can be issued, provided that the property is not already served or showing a bona fide public health emergency as defined in 14.32.050. The requirement for providing evidence of an adequate water supply was codified in 1990 under RCW 19.27.097 in the Building Code section.

CURRENT POPULATION AND SERVICE CONNECTIONS

WATER USE CLASSIFICATIONS

The City has divided all water customers into 11 different classes for billing purposes. For planning purposes, the water customers have been combined into four different groups: 1) single-family residential; 2) multi-family residential; 3) commercial/other; and 4) wheeled. The commercial/other group includes the following billing classes: commercial, irrigation, schools, and firelines. The wheeled group includes the Tulalip Tribes and PUD connections. The demand analysis that follows will report on the water use patterns of these four user groups.

RESIDENTIAL POPULATION SERVED

The population within the City limits was 62,600 in 2014, based on estimates from the Washington State OFM. Since the City provides water service to many customers outside of the City limits, the actual population served by the City's water system is larger. The 2014 residential population served by the City within the water service area is estimated to be approximately 66,686. The computation of the population served is discussed in **Chapter 3**, along with a more detailed discussion of the City's population and household trends.

As shown in **Table 4-1,** the City provided water service to an average of 20,376 connections in 2014. Approximately 18,394 connections (90 percent) were single-family residential customers, 868 connections (4 percent) were multi-family residential customers, 2 connections (less than 1 percent) were wheeled connections, and 1,112 connections (5 percent) were all other customer types. Other customer types include commercial, irrigation, schools, and firelines. The 868 multi-family residential connections serve approximately 6,069 units (units represent individual apartments, condominiums, or other components of a multi-family dwelling), as shown in **Table 4-2**.

Table 4-1
Average Annual Metered Consumption and Service Connections

Year	Customer Class				Totals
	Single-family	Multi-family	Commercial/Other	Wheeled	
Average Number of Connections					
2007	15,433	829	1,035	2	17,299
2008	15,651	833	1,052	2	17,538
2009	15,875	833	1,068	2	17,778
2010	16,047	832	1,069	2	17,951
2011	16,217	832	1,063	2	18,114
2012	16,425	835	1,070	2	18,333
2013	16,584	841	1,083	2	18,511
2014	18,394	868	1,112	2	20,376
Average Annual Consumption (MG)					
2007	1,017	246	739	292	2,294
2008	996	250	901	313	2,460
2009	1,064	266	522	423	2,276
2010	986	246	624	428	2,284
2011	948	233	644	507	2,333
2012	959	225	617	546	2,347
2013	979	233	650	587	2,449
2014	1,045	242	452	683	2,423
Average Daily Consumption Per Connection (gal/day/conn)					
2007	181	813	1,956	400,411	363
2008	174	819	2,341	428,142	383
2009	184	875	1,339	579,863	351
2010	168	811	1,598	586,575	349
2011	160	767	1,660	694,932	353
2012	160	737	1,574	745,628	350
2013	162	757	1,644	804,521	362
2014	156	763	1,115	936,074	326
Average	168	793	1,653	647,018	355

Table 4-2
Multi-family Units

Year	Approximate Total Multi-family Units	Approximate Average Daily Consumption Per Unit (gal/day/unit)
2007	5,793	116
2008	5,820	117
2009	5,825	125
2010	5,818	116
2011	5,813	110
2012	5,839	105
2013	5,881	108
2014	6,069	109
Average	5,857	113

The number of single-family residential connections increased significantly between 2013 and 2014 because the City began providing water service to the Sunnyside-Whiskey Ridge annexation area on January 1, 2014.

EXISTING WATER DEMANDS

WATER CONSUMPTION

Water consumption is the amount of water used by all customers of the system, as measured by the customer's meters. **Table 4-1** shows the historical average number of connections, average annual consumption, and average daily consumption per connection of each customer class for the City from 2007 through 2014.

The number of multi-family connections is less than the number of units served since one connection typically serves several units. **Table 4-2** shows the historical approximate total of multi-family units, and the approximate average daily consumption per multi-family unit within the City's water service area from 2007 through 2014. Total multi-family units are based on the ratio between multi-family units and multi-family connections, current as of July 2, 2014.

As shown in **Chart 4-1**, the single-family residential class represents approximately 90 percent of all connections, but only 43 percent of total system consumption, as shown in **Chart 4-2**. This is due to the lower consumption per connection of single-family residential customers as compared to other customer types. As shown in **Table 4-1**, single-family residential customers use an average of approximately 168 gpd per connection, compared to multi-family customers that use an average of approximately 793 gpd per connection, and commercial and other customers that use an average of approximately 1,653 gpd per connection. Since multiple units are typically served by one multi-family connection, **Table 4-2** includes the average daily consumption per unit for the multi-family class, which historically has been approximately 113 gpd per unit. The lower consumption of multi-family customers is expected since the average household size of multi-family units is usually less than the average household size of single-family units, and multi-family units

consume considerably less water for lawn and garden maintenance. Additionally, the higher consumption of commercial customers is expected since these customers include the system's highest individual water users.

Chart 4-1
2014 Water Connections by Customer Class

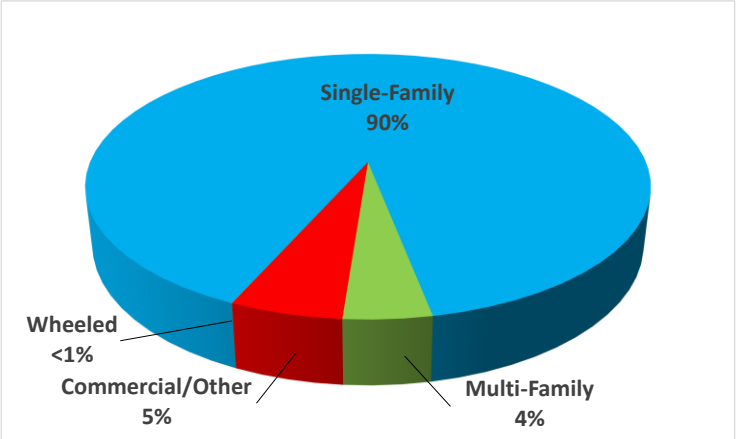

Chart 4-2
2014 Water Consumption by Customer Class

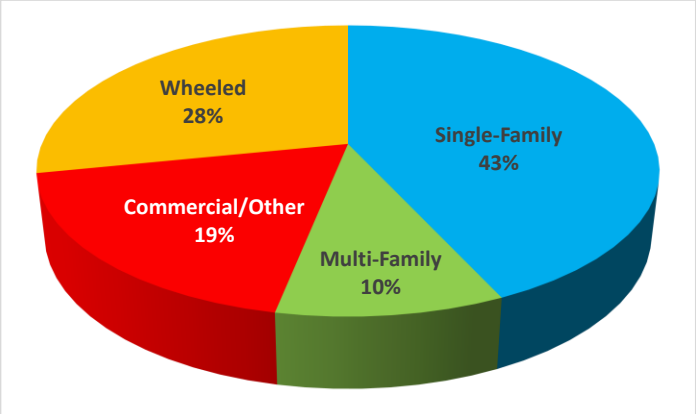

Table 4-3 shows the largest water users of the system in 2014, and their total amount of metered consumption for the year. The total water consumption of these 20 water accounts represented approximately 9.8 percent of the system's total metered consumption in 2014. The list of accounts in **Table 4-3** consists of water users primarily from the commercial/other customer class.

Table 4-3
Largest Water Users

Name	Address	Total Annual Consumption (gals)
City of Arlington[1]	N/A	57,262,000
Stillaguamish Athletic Club[1]	4417 172nd Street NE, Arlington	51,320,000
Marysville School District No. 25 (Sunnyside Elementary)	3707 Sunnyside Boulevard, Marysville	50,738,000
National Food Corporation	16900 51st Avenue NE, Arlington	11,536,000
City of Marysville	514 Delta Avenue, Marysville	6,503,000
City of Marysville	6810 84th Street NE, Marysville	6,336,000
Lakewood School District No. 306	17000 16th Drive NE, Marysville	5,550,000
Mobile Manor - Office	11424 36th Drive NE, Marysville	4,678,000
Universal Aerospace	4000 88th Street NE, Marysville	4,536,000
Captain Dizzy Car Wash	1219 State Avenue, Marysville	4,267,000
Midway Gardens Mobile Home Park	3715 152nd Street NE, Marysville	4,131,000
Windsor Square Apartments	9912 48th Drive NE, Marysville	3,983,000
Casita Apartments	6925 47th Avenue NE, Marysville	3,773,000
Northwest Composites	12810 State Avenue, Marysville	3,468,000
Marysville School District No. 25 (Marysville-Pilchuck HS)	5611 108th Street NE, Marysville	3,386,000
Marysville YMCA	6420 60th Drive NE, Marysville	3,265,000
Private Residential Customer	Withheld	3,176,000
Allen Creek Healthcare	5925 47th Avenue NE, Marysville	3,133,000
Marysville Care Center	1821 Grove Street, Marysville	3,061,000
Holiday Inn Express - Marysville	8606 36th Avenue NE, Marysville	3,010,000
Largest Water Users Total Consumption		237,112,000
Water System Total Metered Consumption		2,422,740,000
Percent of Total		9.8%

(1) The City of Marysville has transferred service to these customers to the City of Arlington.

Residential demand varies throughout the year, typically peaking in the hot summer months. Commercial/other customers often peak at different times or have different peaking factors because their uses differ. The demand for single-family residential customers in the City generally peaks in the summer, as shown in **Chart 4-3**. Multi-family residential consumption has less pronounced peaks, but also typically peaks in the summer, as shown in **Chart 4-4**. Commercial/other consumption also typically peaks in the summer, as shown in **Chart 4-5**. Wheeled consumption (water provided to the Tulalip Tribes and the PUD) also typically peaks in the summer, as shown in **Chart 4-6**. The City reads most meters every two months as shown in **Chart 4-3**, **Chart 4-4**, and **Chart 4-5**. Wheeled consumption is recorded monthly, as shown in **Chart 4-6**.

Chart 4-3
Historical Bi-monthly Single-family Consumption

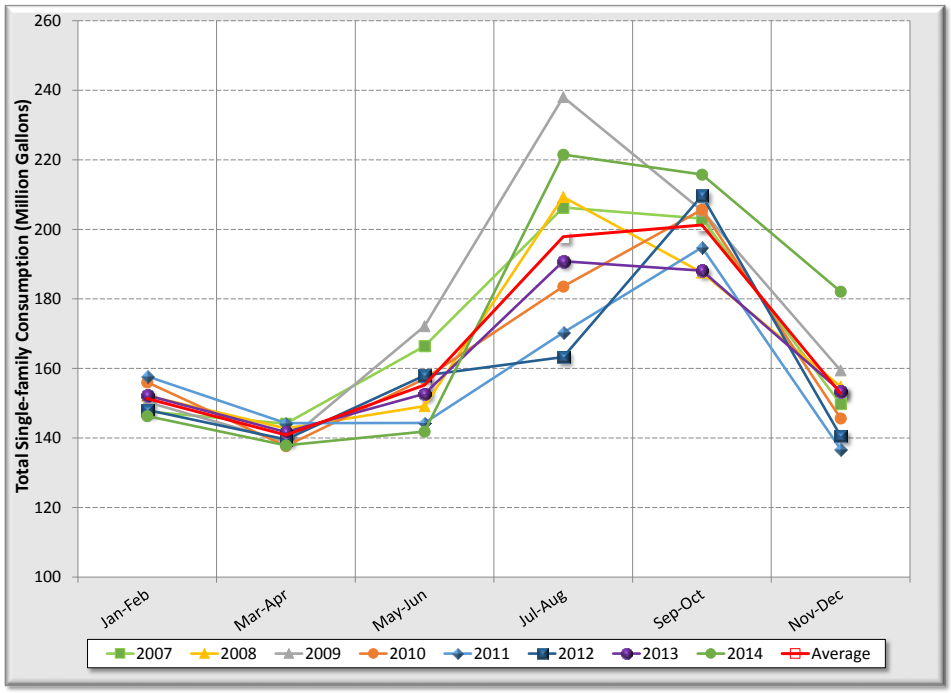

Chart 4-4
Historical Bi-monthly Multi-family Consumption

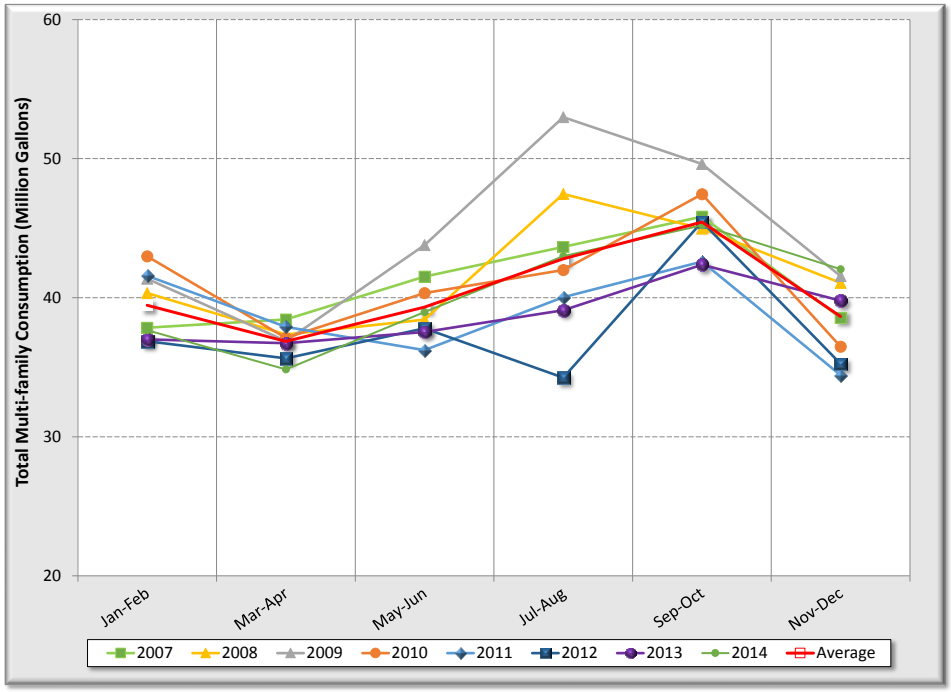

Chart 4-5
Historical Bi-monthly Commercial/Other Consumption

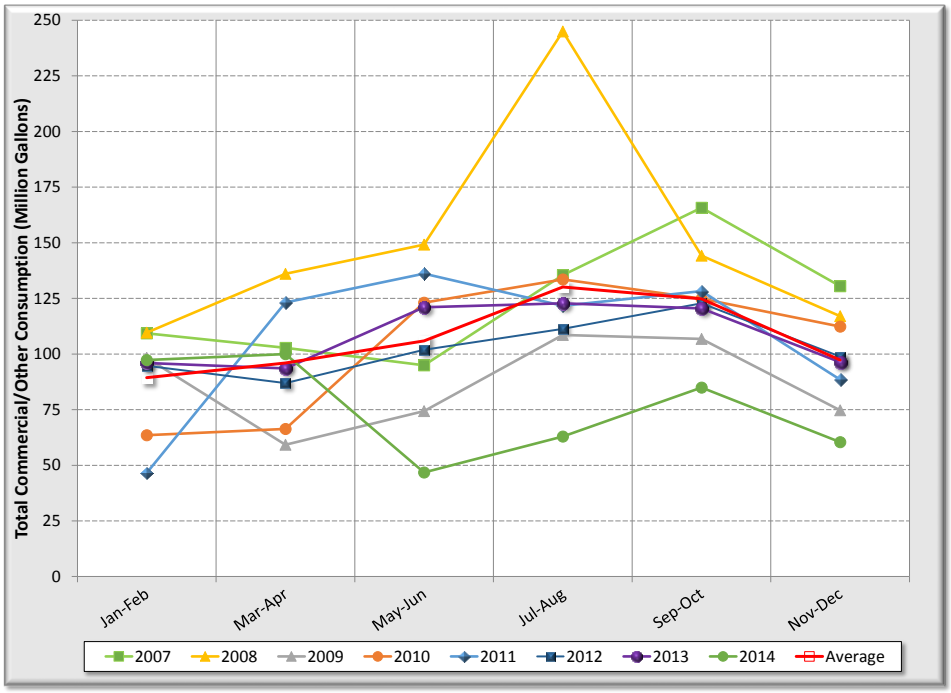

Chart 4-6
Historical Monthly Wheeled Consumption

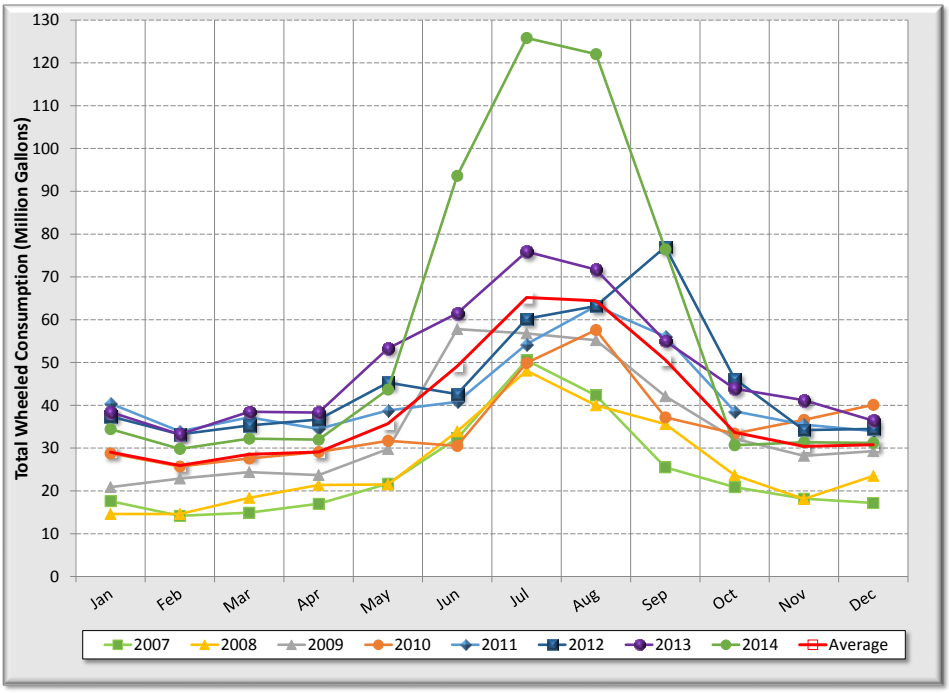

Chart 4-7 shows the ratio of monthly or bi-monthly consumption to average annual consumption for each of the four customer classes. The peak monthly consumption versus average monthly consumption factor for the wheeled connections is higher than the peak bi-monthly consumption versus average bi-monthly consumption factor for single-family, multi-family, and commercial/other customers, although the improved resolution of monthly versus bi-monthly data may account for these higher peak ratios. All customer classes experience higher peaks in the summer months. The higher peaks are likely associated with irrigation and other residential summer water usage.

Chart 4-7

Average Monthly or Bi-monthly Peaking Factors by Customer Class

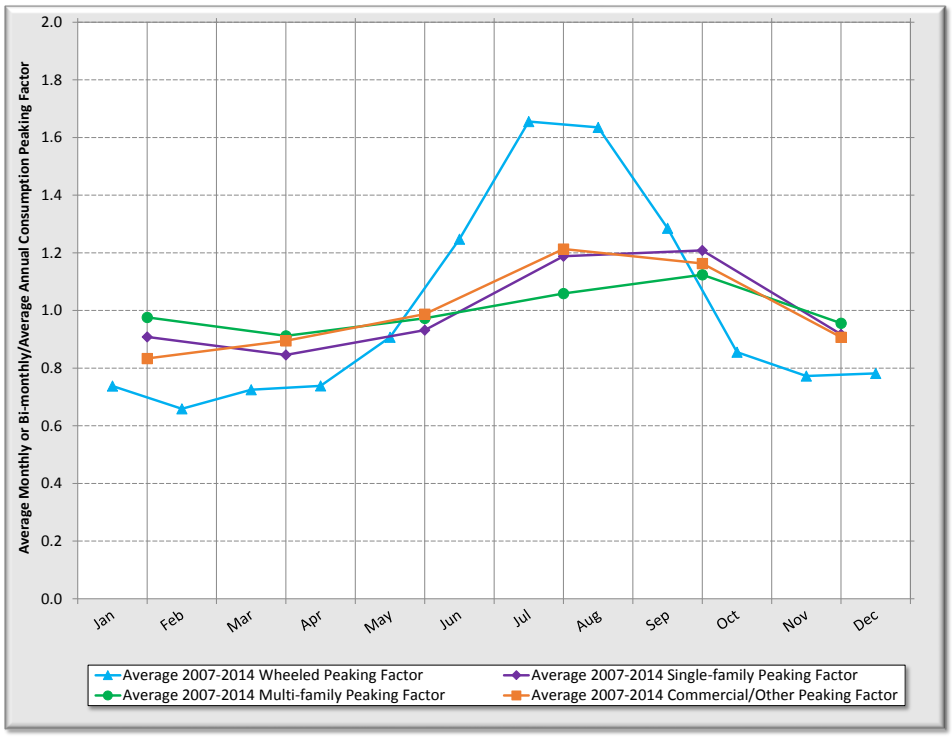

Table 4-4 shows the annual wheeled consumption by purveyor from 2007 to 2014. Since 2009, the Tulalip Tribes have consistently consumed more wheeled water than the PUD. In 2014, the Tulalip Tribes accounted for approximately 62 percent of wheeled consumption, while the PUD accounted for approximately 38 percent. Overall wheeled consumption has steadily increased since 2007.

PUD consumption has recently changed due to two reasons. In 2014, the City purchased a portion of the PUD water system, including about 2,000 water services, and began providing water directly to them. Additionally, the City moved the JOA flow control valve from the Hewitt Avenue meter at the Everett pipeline to the terminal end of the JOA line at the City's Getchell Reservoir. Prior to relocation of the flow control valve, the PUD was restricted to pumping 2 hours per day. After the flow control valve was moved, the PUD was able to pump in an unrestricted fashion, and significantly increased the amount of water pulled from the JOA line.

Table 4-4
Annual Wheeled Consumption by Purveyor

Year	Tulalip Tribes Consumption (MG)	PUD Consumption (MG)	Total Wheeled Consumption (MG)
2007	128	164	292
2008	144	169	313
2009	241	182	423
2010	260	168	428
2011	345	163	507
2012	377	169	546
2013	441	146	587
2014	426	258	683
Average	295	177	473

WATER SUPPLY

Water supply, or production, is the total amount of water supplied to the system, as measured by the meters at source of supply facilities. Water supply is different than water consumption in that water supply is the recorded amount of water put into the system and water consumption is the recorded amount of water taken out of the system. The measured amount of water supply of any system is typically larger than the measured amount of water consumption, due to non-metered water use and water loss (i.e., distribution system leakage), which will be described more in the **Distribution System Leakage** section. **Table 4-5** summarizes the total amount of water supplied to the system from 2003 through 2014.

Table 4-5
Historical Water Supply

Year	Annual Supply (gallons)
2003	2,059,000,000
2004	2,245,000,000
2005	1,863,000,000
2006	1,990,000,000
2007	1,975,000,000
2008	1,955,400,000
2009	2,104,600,000
2010	1,939,000,000
2011	1,941,900,000
2012	1,984,100,000
2013	2,030,000,000
2014	2,275,153,000

Like most other water systems, the City's water use varies seasonally. **Chart 4-8** shows the historical amount of water supplied to the City's system for each month from 2007 to 2014.

Chart 4-8
Historical Monthly Water Supply

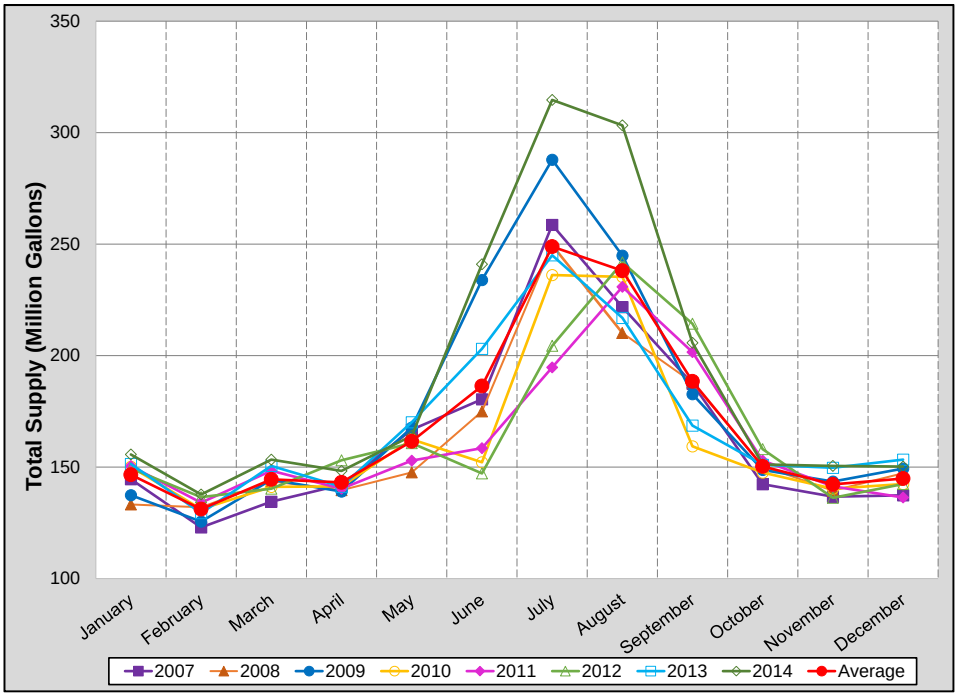

As shown in **Chart 4-8**, water supply increases significantly during summer months, primarily due to irrigation. The City's highest water use typically occurs in July and August. On average, the amount of water supplied during these 2 months is approximately 24 percent of the total supply for the entire year.

Chart 4-9 shows the monthly water supply by source for 2014. In 2014, the majority of water was supplied from the Everett Intertie, with smaller volumes coming from the Edward Springs source, the Stillaguamish Ranney Well, and the Lake Goodwin Well. **Chart 4-10** shows the annual water supply by source from 2007 to 2014. The relative volume supplied from each of the City's sources has been similar since 2007, except that the volume supplied from the Stillaguamish Ranney Well has been slowly increasing since 2010. This is likely due, at least in part, to the removal of the separation between the North 240 Zone and South 240 Zone, which occurred in 2011.

Chart 4-9
2014 Monthly Water Supply by Source

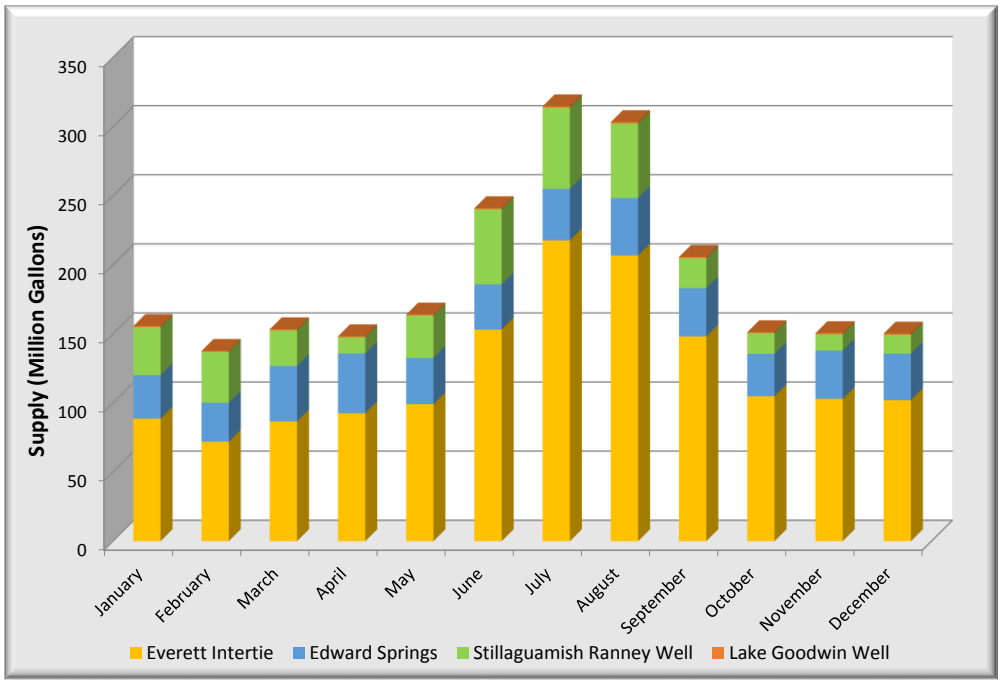

Chart 4-10
Annual Water Supply by Source

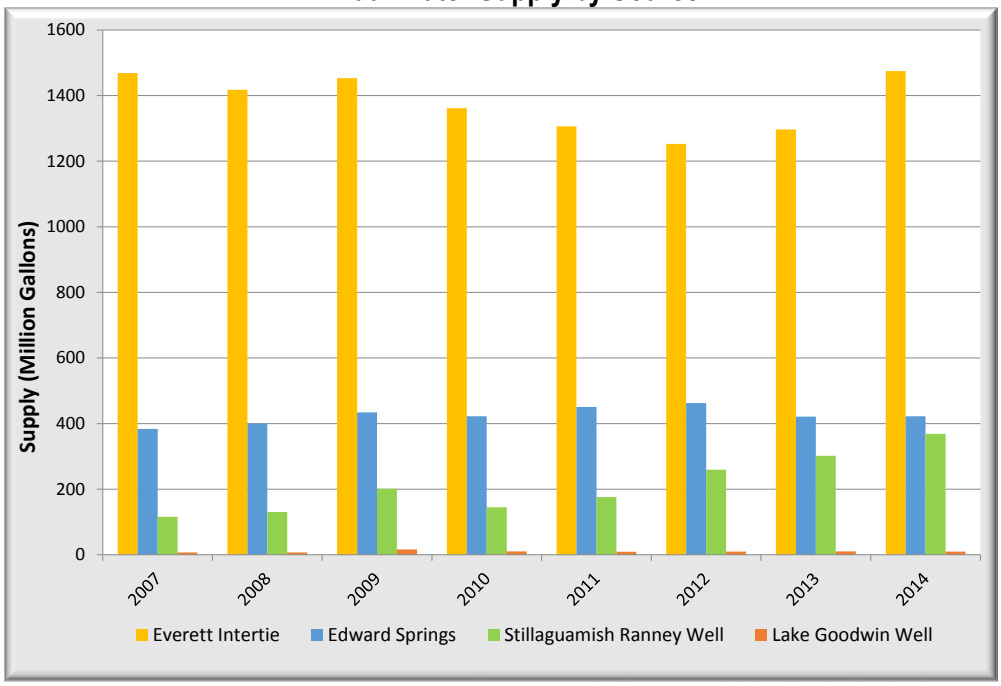

Distribution System Leakage

The difference between the amount of water supply and the amount of authorized water consumption is the amount of DSL. There are many sources of DSL in a typical water system, including water system leaks, inaccurate supply metering, inaccurate customer metering, illegal water system connections or water use, fire hydrant usage, water main flushing, and malfunctioning telemetry and control equipment resulting in reservoir overflows. Several of these types of usages, such as water main flushing and fire hydrant usage, may be considered authorized uses if they are tracked and estimated. Although real losses from the distribution system, such as reservoir overflows and leaking water mains, should be tracked for accounting purposes, these losses must be considered leakage. The WUE Rule, which became effective in 2007, establishes a DSL standard of 10 percent or less based on a rolling 3-year average.

The City has tracked water usage from flushing main lines and dead-ends since 2011, and some other authorized usage volumes were available for 2014.

The amount of DSL in the City's system has been consistently negative, as shown in **Table 4-6**, which indicates inaccuracy in the production or consumption data shown. The City suspects the error is due to inaccuracy in the production meters. In 2012, each meter at the City-owned sources was serviced and calibrated. As this servicing did not indicate any problems with the meters, the City requested servicing of the Everett Intertie meter by the City of Everett. Some components of the meter were replaced, but the City has requested additional improvements to increase the accuracy of the meter. The City of Everett is solely responsible for the maintenance, repairs, and calibration of the intertie meter. The City continues to be diligent in ensuring that all City owned meters are accurate and calibrated annually and will continue to coordinate with Everett to improve the accuracy of the DSL calculations.

Table 4-6
Distribution System Leakage

Description	2007	2008	2009	2010	2011	2012	2013	2014
Authorized Consumption (AC)								
Metered Customer Use (1,000 gal)	2,294,160	2,459,716	2,275,584	2,283,860	2,332,571	2,346,761	2,449,025	2,422,740
Flushing (1,000 gal)[1]	-	-	-	-	983	2,564	2,067	17,200
Edward Springs Water Treatment Plant (1,000 gal)	-	-	-	-	-	-	-	4,758
Stillaguamish Water Treatment Plant (1,000 gal)	-	-	-	-	-	-	-	1,284
Wastewater Treatment Plant (1,000 gal)	-	-	-	-	-	-	-	300
Vactor/Sweeper Meter (1,000 gal)	-	-	-	-	-	-	-	500
Fill Stations (1,000 gal)	-	-	-	-	-	-	-	900
Watchdogs (1,000 gal)	-	-	-	-	-	-	-	14,538
Main Breaks (1,000 gal)	-	-	-	-	-	-	-	200
Total Authorized Consumption (1,000 gal)	2,294,160	2,459,716	2,275,584	2,283,860	2,333,554	2,349,325	2,451,092	2,462,420
Total Production (TP)								
Total Production/Supply (1,000 gal)	1,975,000	1,955,400	2,104,600	1,939,000	1,941,900	1,984,100	2,030,000	2,275,153
Distribution System Leakage (TP - AC)								
Total Distribution System Leakage (1,000 gal)	-319,160	-504,316	-170,984	-344,860	-391,654	-365,225	-421,092	-187,267
Total Distribution System Leakage (%)	-16.2%	-25.8%	-8.1%	-17.8%	-20.2%	-18.4%	-20.7%	-8.2%
Rolling 3-Year Average DSL (%)	---	---	-17%	-17%	-15%	-19%	-20%	-16%

NOTES:
1. Flushing volumes were not available prior to 2011. For 2011, main line flushing volumes were available for September through December, and dead end flushing volumes were available for October through December.

Once the accuracy of the DSL calculation has been improved, the City intends to continue to reduce the amount of DSL in the system to meet the DSL standard through its leak detection surveys and water main replacement program. The City will continue to record authorized flushing water usage and improve the reporting of additional authorized water uses, including coordination with the fire department. The City will also implement the WUE Program contained in **Appendix G**.

Typically, the average day demand for each year would be calculated from the City's annual supply totals. However, the City's metered customer demands are higher than the City's supply totals. As a result, the average day demand is calculated as the total annual customer demands plus any other known authorized consumption in terms of gallons per minute. **Table 4-7** lists the annual consumption totals and the average day demand.

Table 4-7
Historical Average Daily Demand

Year	Annual Consumption (gallons)[1]	Average Day Demand (gpm)[1]
2007	2,294,160,000	4,365
2008	2,459,716,000	4,667
2009	2,275,584,000	4,329
2010	2,283,860,000	4,345
2011	2,333,554,384	4,440
2012	2,349,325,256	4,458
2013	2,451,092,426	4,663
2014	2,462,419,872	4,685

NOTES:
1. Annual Consumption and ADD include authorized non-revenue water consumption.

In general, the amount of water consumed by the City's customers and other authorized uses remained relatively steady from 2007 until approximately 2014. This was most likely the result of water use efficiency practices, including new buildings with low flow plumbing fixtures, and the repair of water system leaks.

Table 4-8 presents the computation of the existing system per capita demand based on 2014 data. As shown in the upper portion of the table, the residential population served by the City's water system in 2014 was approximately 66,686. This population served, and the City's total water consumption in 2014, were used to arrive at the existing per capita demand of 101 gpd.

Table 4-8
Existing Per Capita Demand

2014 Residential Population Served	
Calculated 2014 Residential Population Served	66,686
2014 Total Annual Consumption (gal)	
2014 Total Annual Consumption (gal)	2,462,419,872
Existing Per Capita Demand (gal/day/capita)	**101**

As shown in **Table 4-3**, in 2014, the City of Arlington and the Stillaguamish Athletic Club accounted for approximately 4.5 percent of the City's water consumption. Since these customers have now been transferred to the City of Arlington, the use of the existing system per capita demand of 101 gpd would not be accurate for projecting future demands. Therefore, an additional computation of per capita demand was performed to provide a more accurate estimate for use in forecasting future water demand. The computation of future per capita demand shown in **Table 4-9** is based on a reduced proportion of demand that is likely to be more representative of the future

type of demand to occur in the City's system. Specifically, the demands for the City of Arlington and the Stillaguamish Athletic Club were excluded from the total annual consumption, and an adjusted annual consumption was calculated. The estimated per capita demand of 97 gpd is used later in this chapter to forecast water demands in future years based on future population estimates.

Table 4-9
Future per Capita Demand Projection

Residential Population Served Computation	
Calculated 2014 Residential Population Served	66,686
Adjusted Total Annual Consumption	
2014 Total Annual Consumption (gal)	2,462,419,872
Less Annual Demand of City of Arlington and Stillaguamish Athletic Club Not Representative of Future New Users (gal)	108,582,000
2014 Net Annual Consumption Adjusted for Future Anticipated Users (gal)	2,353,837,872
Estimated Per Capita Demand for Future Demand Projections (gal/day/capita)	**97**

It should also be noted that water wheeled to the Tulalip Tribes and the PUD is included in the total annual supply, and as such, in the per capita demands shown in **Table 4-8** and **Table 4-9**. It is assumed that the demands of the Tulalip Tribes and PUD will grow proportionally to increases in the City's population for the remainder of the 20-year planning period.

Table 4-10 shows the average demand of each of the City's ten existing pressure zones. The demands are based on 2013 and 2014 individual customer meter water demand data provided by the City. The City's two largest pressure zones, the 240 and 170 Zones, account for approximately 75 percent of the total system demand. The PUD connection is served directly from the JOA line, while the Tulalip Tribes connection is served from the 240 Zone. **Figure 2-1** in **Chapter 2** displays the City's pressure zones.

Table 4-10
2014 Demands by Pressure Zone

Pressure Zone	2014 Annual Consumption (gallons)	Average Daily Demand (gpm)	Percent of Total Demand (%)
JOA	195,201,843	371	7.9%
510	191,911,639	365	7.8%
460	3,374,897	6	0.1%
415	70,133,224	133	2.8%
360/440	83,132,214	158	3.4%
327	2,906,755	6	0.1%
285	48,059,784	91	2.0%
260	16,312,562	31	0.7%
240	1,269,561,131	2,415	51.6%
203	16,989,277	32	0.7%
170	564,836,545	1,075	22.9%
Total	2,462,419,872	4,685	100%

Equivalent Residential Units

The demand of each customer class can be expressed in terms of ERUs for demand forecasting and planning purposes. One ERU is equivalent to the amount of water used by a single-family residence. The number of ERUs represented by the demand of the other customer classes is determined from the total demand of the customer class and the unit demand per ERU from the single-family residential demand data.

Tables 4-11A and **4-11B** present the computed number of ERUs for each customer class from 2007 through 2014. The demands shown are based on the consumption totals of each customer class and the authorized non-revenue water consumption shown in **Table 4-6**. Typically, DSL would also be factored into this calculation, but it is not because the City's DSL is negative. The average demand per ERU from 2010 through 2014 (5-year average) was 162 gpd. This is less than the average single-family demand in the Puget Sound area, which is typically between 200 and 300 gpd.

Table 4-11A
Equivalent Residential Units

Year	Average Number of Connections	Average Annual Demand (gallons)[1]	Demand per ERU (gal/day/ERU)	Total ERUs
Single-family Residential (ERU Basis)				
2007	15,433	1,017,276,000	181	15,433
2008	15,651	995,769,000	174	15,651
2009	15,875	1,064,226,000	184	15,875
2010	16,047	985,632,000	168	16,047
2011	16,217	948,649,771	160	16,217
2012	16,425	960,241,090	160	16,425
2013	16,584	979,882,503	162	16,584
2014	18,394	1,062,536,909	158	18,394
Multi-family Residential				
2007	829	245,829,000	181	3,730
2008	833	249,611,000	174	3,923
2009	833	266,178,000	184	3,971
2010	832	246,340,000	168	4,011
2011	832	232,881,139	160	3,981
2012	835	225,492,122	160	3,857
2013	841	232,726,298	162	3,939
2014	868	245,691,110	158	4,253

NOTES:
1. Average Annual Demand includes authorized non-revenue consumption.

Table 4-11B
Equivalent Residential Units – Continued

Year	Average Number of Connections	Average Annual Demand (gallons)[1]	Demand per ERU (gal/day/ERU)	Total ERUs
Commercial/Other				
2007	1,035	738,755,000	181	11,208
2008	1,052	900,936,000	174	14,161
2009	1,068	521,880,000	184	7,785
2010	1,069	623,688,000	168	10,154
2011	1,063	644,509,603	160	11,018
2012	1,070	617,195,661	160	10,557
2013	1,083	650,687,836	162	11,013
2014	1,112	459,666,142	158	7,957
Wheeled				
2007	2	292,300,000	181	4,435
2008	2	313,400,000	174	4,926
2009	2	423,300,000	184	6,314
2010	2	428,200,000	168	6,972
2011	2	507,513,872	160	8,676
2012	2	546,396,384	160	9,346
2013	2	587,795,789	162	9,948
2014	2	694,525,711	158	12,023
System-wide Totals				
2007	17,299	2,294,160,000	181	34,805
2008	17,538	2,459,716,000	174	38,661
2009	17,778	2,275,584,000	184	33,945
2010	17,951	2,283,860,000	168	37,184
2011	18,114	2,333,554,384	160	39,892
2012	18,333	2,349,325,256	160	40,186
2013	18,511	2,451,092,426	162	41,484
2014	20,376	2,462,419,872	158	42,628

NOTES:
1. Average Annual Demand includes authorized non-revenue consumption.

The average demand per ERU from 2010 through 2014 of 162 gpd will be used later in this chapter to forecast ERUs in future years based on estimated future demands. This demand per ERU value will also be used to determine the capacity (in terms of ERUs) of the existing system in **Chapter 7**.

Average Day Demand

ADD is the total amount of water delivered to the system in a year divided by the number of days in the year. The ADD is determined from the historical water use patterns of the system and can be used to project future demands within the system. ADD data are typically used to determine standby storage requirements for water systems. Standby storage is the volume of a reservoir used to provide water supply under emergency conditions when supply facilities are out of service. Water production records from the City's wells and spring sources were reviewed to determine the system's ADD. The system's average day demand from 2007 through 2014 is shown in **Table 4-6**.

Maximum Day Demand

MDD is the maximum amount of water used throughout the system during a 24-hour time period of a given year. MDD typically occurs on a hot summer day when lawn watering is occurring throughout much of the system. In accordance with WAC 246-290-230, the distribution system shall provide fire flow at a minimum pressure of 20 psi during MDD (i.e., peak day demand) conditions. Supply facilities (e.g., wells, springs, pump stations, interties) are typically designed to supply water at a rate that is equal to or greater than the system's MDD.

Fifteen-minute interval water production and reservoir level records from 2015 were reviewed to determine the system's MDD. The City's MDD occurred on July 4, 2015, when temperatures reached approximately 86 degrees Fahrenheit (ºF), and were similar the days before and after. As shown in **Table 4-12**, the average demand of the system on July 4, 2015, or MDD, was 9,904 gpm.

Table 4-12
Maximum Day Demands and Peaking Factors

Peak Demand Data

Demand Type	Date	Demand (gpm)
Average Day Demand (ADD)	2015	4,634
Maximum Day Demand (MDD)	7/4/2015	9,904
Peak Hour Demand (PHD)	7/2/2015 8:00 PM - 9:00 PM	14,417

Peaking Factors

Maximum Day Demand/Average Day Demand (MDD/ADD)	2.14
Peak Hour Demand/Maximum Day Demand (PHD/MDD)	1.46
Peak Hour Demand/Average Day Demand (PHD/ADD)	3.11

Peak Hour Demand

PHD is the maximum amount of water used throughout the system, excluding fire flow, during a 1-hour time period of a given year. In accordance with WAC 246-290-230, new public water systems or additions to existing systems shall be designed to provide domestic water at a minimum pressure of 30 psi during PHD conditions. Equalizing storage requirements are typically based on PHD data.

The PHD, like the MDD, is typically determined from the combined flow of water into the system from all supply sources and reservoirs. Fifteen-minute interval water production and reservoir level records were reviewed to evaluate the PHD. As shown in **Table 4-12,** the City's PHD, which occurred on July 2, 2015, from 8:00 p.m. to 9:00 p.m., was 14,417 gpm.

Table 4-12 also shows the peaking factors of the water system based on the ADD, MDD, and PHD data presented above. The 2015 ADD was not available at the time of these analyses; therefore, the estimated 2015 ADD was used to estimate the peaking factors of the system. The MDD/ADD demand ratio of 2.14 is within the typical range of 1.2 to 2.5 for most systems. The estimated PHD/MDD ratio of 1.46 is within the typical range of 1.3 to 2.0 for most systems. These peaking factors will be used later in this chapter in conjunction with projected ADDs, to project future MDDs and PHDs of the system.

FIRE FLOW DEMAND

Fire flow demand is the amount of water required during firefighting as defined by applicable codes. Fire flow requirements are established for individual buildings and expressed in terms of flow rate (gpm) and flow duration (hours). Fighting fires imposes the greatest demand on the water system because a high rate of water must be supplied over a short period of time, requiring each component of the system to be properly sized and configured to operate at its optimal condition. Adequate storage and supply is useless if the transmission or distribution system cannot deliver water at the required rate and pressure necessary to extinguish a fire.

General planning-level fire flow requirements were established for the different land use categories to provide a target level of service for planning and sizing future water facilities in areas that are not fully developed. The general planning-level fire flow requirement for each land use category is shown in **Table 4-13**. The water system analyses presented in **Chapter 7** are based on an evaluation of the water system for providing sufficient fire flow in accordance with these general planning-level fire flow requirements. The fire flow requirements shown in **Table 4-13** do not necessarily equate to actual existing or future fire flow requirements for all buildings, since this is typically based on building size, construction type, and fire suppression systems provided. Improvements to increase the available fire flow to meet actual fire flow requirements greater than those shown in **Table 4-13** shall be the responsibility of the developer.

Table 4-13
General Planning-level Fire Flow Requirements

Land Use Category	Fire Flow Requirement (gpm)	Flow Duration (hours)
Single Family Residential	1,000	1
Multi-Family Residential/Commercial/Other	2,500	2

FUTURE WATER DEMANDS

BASIS FOR PROJECTING DEMANDS

Future demands were calculated from the results of the future per capita demand computations shown in **Table 4-9** and the projected population data from **Chapter 3**. Future demand projections were computed with and without water savings expected from implementing WUE measures contained in the City's WUE Program in **Appendix G**

. The calculated future per capita demand of 97 gpd was used for all demand projections without savings from WUE measures. The per capita demand was reduced to reflect the WUE goals and used as the basis for future water demand projections with implementation of the WUE Program. The City's WUE Program presents a goal to reduce the system-wide average daily demand by 7.1 percent by 2035, and maintain this reduction through 2036 (the end of the 20-year planning period). This goal is based on the City of Everett's goal to reduce the average daily demand projection in 2035 from 80.6 MGD to 74.9 MGD, a 7.1 percent reduction.

DEMAND FORECASTS AND CONSERVATION

Table 4-14 presents the projected water demand forecast for the City's water system. The actual demand data from 2014 is also shown for comparison purposes. The future ADDs were projected based on population estimates for the given years and the estimated demand per capita values. The future MDDs and PHDs shown were computed from the projected ADDs and the existing system peaking factors shown in **Table 4-12**. The future demand projections are also shown with and without estimated reductions in water use from achieving WUE goals.

Table 4-14
Future Water Demand Projections

Description	Actual	Projected												
	2014	2015	2016	2017	2018	2019	2020	2021	2022 (+6 years)	2023	2024	2025	2026 (+10 years)	2036 (+20 years)
Population Data														
Water Service Area Population	66,686	67,758	68,848	69,954	71,079	72,222	73,383	74,563	75,762	76,980	78,217	79,475	80,753	94,716
Increase from Base Year 2014		1,072	2,162	3,268	4,393	5,536	6,697	7,877	9,076	10,294	11,531	12,789	14,067	28,030
Demand Basis Data (gal/day/capita)[1]														
ADD without WUE	101	97	97	97	97	97	97	97	97	97	97	97	97	97
Average Day Demand (gpm)														
Demand without WUE	4,685	4,634	4,707	4,782	4,857	4,934	5,013	5,092	5,173	5,255	5,338	5,423	5,509	6,450
Demand with WUE		4,634	4,697	4,760	4,824	4,887	4,950	5,014	5,077	5,140	5,203	5,267	5,330	5,994
Maximum Day Demand (gpm)[2]														
Demand without WUE	8,094	9,904	10,061	10,220	10,382	10,546	10,714	10,883	11,056	11,231	11,410	11,591	11,775	13,785
Demand with WUE		9,904	10,039	10,174	10,310	10,445	10,580	10,715	10,851	10,986	11,121	11,257	11,392	12,810
Peak Hour Demand (gpm)[3]														
Demand without WUE	11,933	14,417	14,645	14,877	15,113	15,352	15,596	15,843	16,094	16,350	16,609	16,873	17,140	20,067
Demand with WUE		14,417	14,614	14,811	15,008	15,205	15,402	15,599	15,796	15,992	16,189	16,386	16,583	18,648

NOTES:
1. Calculated for future population only.
2. Maximum Day Demand without WUE for 2015 based on actual telemetry data.
3. Peak Hour Demand without WUE for 2015 based on actual telemetry data.

The analysis and evaluation of the existing water system with proposed improvements, as presented in **Chapters 7** and **9**, is based on the 2036 projected demand data without WUE reductions. This ensures that the future system will be sized properly to meet all requirements, whether or not additional water use reductions are achieved. However, the City will continue to pursue reductions in water use by implementing the WUE Program contained in **Appendix G** of this WSP.

Table 4-15 presents the existing and projected ERUs of the system. The ERU forecasts are based on the projected water demands from **Table 4-14** and the 5-year rolling average demand per ERU that was computed from actual 2010 through 2014 data. The historical and projected water demand and ERU data from **Tables 4-14** and **4-15** are also shown graphically in **Chart 4-11**. **Chart 4-11** will be used in **Chapter 7** to compare demand projections with source of supply availability.

Table 4-15
Future ERU Projections

Description	Actual 2014	Projected 2015	2016	2017	2018	2019	2020	2021	2022 (+6 years)	2023	2024	2025	2026 (+10 years)	2036 (+20 years)
Demand Data (gpm)[1]														
ADD without WUE	4,685	4,634	4,707	4,782	4,857	4,934	5,013	5,092	5,173	5,255	5,338	5,423	5,509	6,450
ADD with WUE		4,634	4,697	4,760	4,824	4,887	4,950	5,014	5,077	5,140	5,203	5,267	5,330	5,994
ERU Basis Data (gal/day/ERU)														
Demand per ERU without WUE	158	162	162	162	162	162	162	162	162	162	162	162	162	162
Demand per ERU with WUE		162	161	161	161	160	160	159	159	158	158	157	156	150
Equivalent Residential Units (ERUs)														
Total System ERUs	42,628	41,270	41,923	42,587	43,262	43,948	44,644	45,352	46,071	46,802	47,544	48,299	49,065	57,443

NOTES:
1. Demand data calculated as in Table 4-14.

Chart 4-11
Future Water Demand and ERU Projections

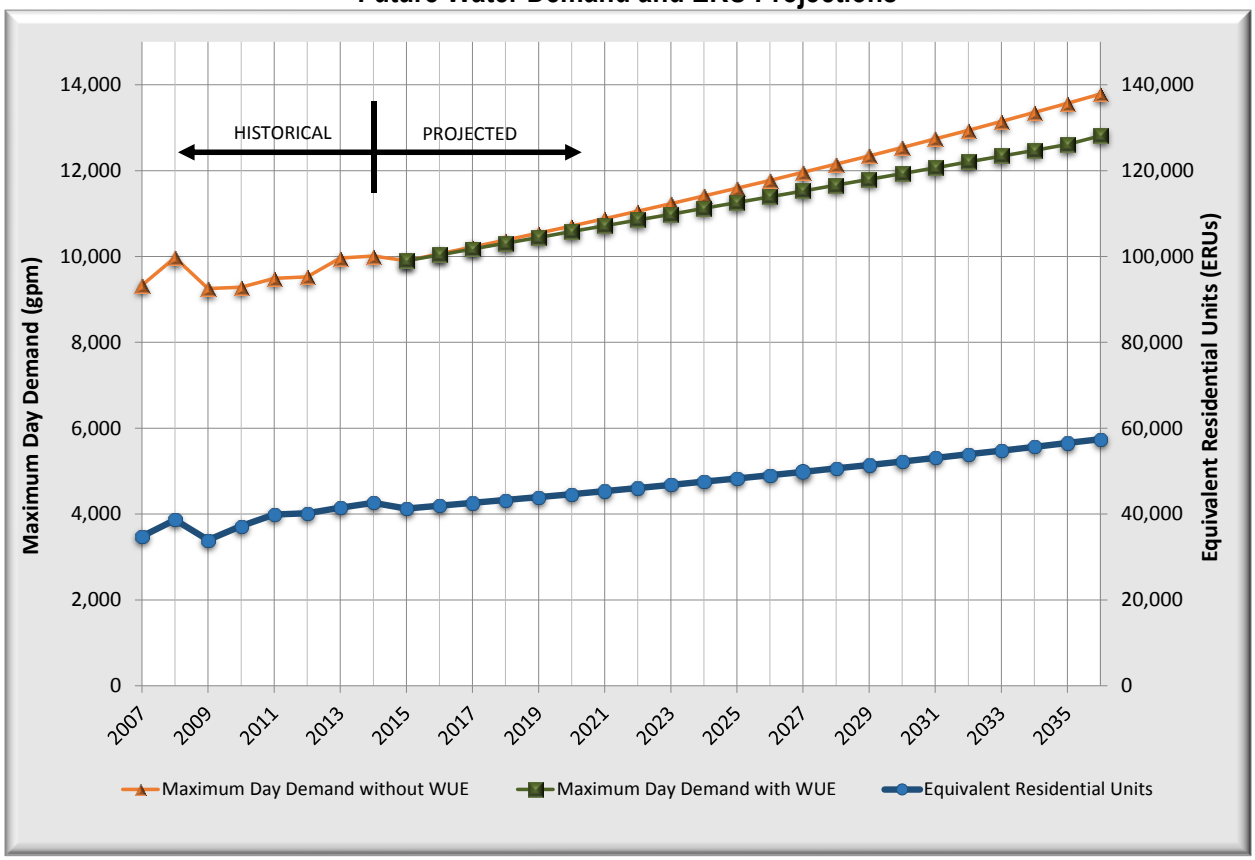

5 | POLICIES AND DESIGN CRITERIA

INTRODUCTION

The City operates and plans water service for City water system customers according to the design criteria, laws, and policies that originate from the seven sources listed in **Table 5-1** in descending order from those with the broadest to narrowest authority.

Table 5-1
Regulatory Agencies

Agency	Design Criteria/Laws/Policies
U.S. Department of Health & Human Services	Federal Regulations
U.S. Environmental Protection Agency	Federal Regulations
Washington State Department of Health	State Regulations
Washington State Department of Ecology	State Regulations
Snohomish County Council	County Regulations
Marysville City Council	Administrative Policies
American Water Works Association	Design Criteria

These laws, design criteria, and policies guide the City's operation and maintenance of the water system on a daily basis, and it's planning for growth and improvements. Their overall objective is to ensure that the City provides high-quality water service at a minimum cost to its customers. They also set the standards the City must meet to ensure that its water supply is adequate to meet existing and future water demands. The system's ability to meet these demands is detailed in **Chapter 7**, and the recommended improvements are identified in **Chapter 9**.

The highest three governmental entities establishing policies and laws – the U.S. Government, Washington State, and Snohomish County Council – establish requirements in statutes, regulations, or ordinances. The Marysville City Council and Mayor adopt policies that cannot be less stringent or in conflict with those established by governments above them. The City's policies take the form of ordinances, memoranda, and operational procedures, many of which are summarized in this chapter.

The policies associated with the following categories are presented in this chapter.

- Supply
- Customer Service
- Facilities
- Finance
- Organization

SUPPLY POLICIES

QUALITY PROTECTION

- The City will pursue steps to meet or exceed all water quality regulations and standards.
- The City will take all reasonable measures to protect its system and customers.

CROSS-CONNECTION CONTROL

- The City has a responsibility to protect the public water system from contamination due to cross-connections. Cross-connections that can be eliminated will be eliminated. Cross-connections that cannot be eliminated must be controlled by an approved air-gap or backflow preventer that is commensurate with the assessed degree of hazard.
- The City has a cross-connection control program for eliminating cross-connections. A copy of the City's Cross-connection Control Plan is contained in **Appendix H**.
- The City has staff that is certified for backflow prevention and testing.
- The City will comply with the backflow prevention assembly installation and testing requirements as indicated in Washington Administrative Code (WAC) 246-290-490, and as published in the most recent version of the Cross Connection Control Manual Accepted Procedure and Practice, Pacific Northwest Section – American Water Works Association (AWWA).

QUANTITY

- The City plans to fully develop its water rights in order to improve supply redundancy and to be better prepared for future growth.
- The City will ensure that the capacity of the system, including wells, pump stations, storage, and transmission mains, is sufficient to meet the maximum day demands of the system.

FIRE FLOW

- The City will plan to provide the following minimum fire flows.

  Single-family Residential: 1,000 gallons per minute (gpm) for 1 hour duration

  Multi-family Residential/Commercial/Other: 2,500 gpm for 2 hours duration

WATER USE EFFICIENCY

- The City will promote the efficient and responsible use of water and will implement conservation measures during a water shortage.

REGIONAL PARTICIPATION

- The City will participate in regional supply management and planning activities.
- The City will supply all customers within the City's water service area, unless a special agreement with an adjacent purveyor exists due to topography or other limiting factors.

CUSTOMER SERVICE POLICIES

DUTY TO SERVE

The City has a duty to provide service to all new connections within the retail service area when the circumstances meet the following four threshold factors.

- The City has sufficient capacity to serve water in a safe and reliable manner.
- The service request is consistent with local plans and development regulations.
- The City has sufficient water rights to provide service.
- The City can provide service in a timely and reasonable manner.

The following section, **Water Service and Connection**, provides additional details regarding the City's duty to serve policies.

WATER SERVICE AND CONNECTION

- The City will strive to provide potable water service to all people within the City limits and designated retail water service area (i.e., where there are existing water mains), provided all policies related to service can be met. Requests for new water service outside the City limits, but within the UGA where there are no existing water mains fronting the property, will only be granted upon extension of water service and completion of an annexation agreement (provided that the property is not already served or showing a bona fide public health emergency as defined in Section 14.32.050 of the Marysville Municipal Code).
- All proposed developments within the City limits and designated water service area shall connect directly to the City's water system, unless deemed unfeasible by the City at the time of the request.
- Water system extensions required to provide water service to proposed developments shall be approved by the City's Department of Public Works and must conform to the City's adopted design criteria, and construction standards and specifications, as shown in the City's Water System Standards contained in **Appendix I**. All costs of the extension shall be borne by the developer.
- Water service cannot be extended outside of the water service area.
- For water service applications within the City limits, the City will review the availability for water service at the time of land use permit, site civil review, and building permit. During the land use permitting process, the City will determine if water is available for the site. During the site civil review, the City will address the sizing and looping of the water main. The formal water service application begins at the time of building permitting when fire flow and service sizing is evaluated. The process takes several months to be completed.
- Water system capacity will be evaluated at the time of water service application. The City will use the capacity analysis contained in **Chapter 7** of this WSP to evaluate source of supply, storage, and water rights capacity available to the applicant.
- Water system capacity, pressure, and fire flow will be considered when providing water availability to applicants.

- Water availability shall expire at the time that the associated permit expires (i.e., land use, site civil, or building permit).
- Time extensions in regard to water availability shall be granted in accordance with the associated permit requirements. When extensions are denied, the disputes are handled through the rules guiding the associated permit process. Disputes can be brought to the City Council for discussion.

ANNEXATIONS

- Areas annexed without existing municipal water supply will be served by the City, provided the area is within the CWSP boundary and the area is not being served by another water purveyor at the time of annexation.
- Areas annexed with existing municipal water supply must meet City water standards.
- The City will follow state guidelines in the assumption of facilities in annexation areas.

TEMPORARY SERVICES

- No temporary service is allowed, unless there is a bona fide health emergency.

EMERGENCY SERVICE

- Compliance with standards may be temporarily deferred for emergency water service.
- Policy criteria may be waived for emergency service.

PLANNING BOUNDARIES

- For planning purposes, the City will use water service boundaries established by agreement as a result of the North Snohomish County Coordinated Water System Plan.
- The City will follow State of Washington guidelines in assuming portions of adjacent water systems as a result of annexation.

SATELLITE SYSTEM MANAGEMENT

- The City will consider providing satellite system management or ownership services within and adjacent to the City's existing service area.

FACILITY POLICIES

This section describes the planning criteria and policies used to establish an acceptable hydraulic behavior level and standard of quality for the water system. Additional criteria are contained in the City's Water System Standards, a copy of which is included in **Appendix I**.

MINIMUM STANDARDS

- All proposed developments within the City's existing and future service areas shall conform to the City's adopted design criteria, construction standards, and specifications.

PRESSURE

- The City will endeavor to maintain a minimum pressure of 40 pounds per square inch (psi) at customer meters during normal demand conditions, excluding a fire or emergency.
- The City will endeavor to maintain a maximum pressure of 100 psi in the water mains during normal demand conditions. Individual residences are responsible for reducing pressures over 80 psi.
- The City will maintain a minimum pressure of 30 psi at customer meters during all high demand conditions, excluding a fire or emergency.
- During fire conditions, the minimum pressure at customer meters and throughout the remainder of the system is 20 psi.
- During a failure of any part of the system, the maximum pressure will not exceed 150 psi.

VELOCITIES

- During normal demand conditions, the velocity of water in a water main should be less than 5 feet per second (fps).
- During emergency conditions, such as a fire, and for design purposes, the velocity of water in a water main may exceed 5 fps, but may not exceed 8 fps.

STORAGE

- Storage within the distribution system must be of sufficient capacity to supplement supply when system demands are greater than the supply capacity (equalizing storage), and still maintain sufficient storage for proper pump operation (operational storage), fire suppression (fire flow storage), and other emergency conditions (standby storage).
- Equalizing storage must be provided when source pumping capacity cannot meet peak hour demands. Equalizing storage must be available at 30 psi to all service connections.
- Standby storage must be located above the elevation that yields a 20 psi service pressure to all services in the zone under peak hour demand conditions with the largest source out of service.
- The City will provide sufficient standby storage for an emergency condition in which a major supply source is out of service. The volume of storage will be sufficient to maintain uninterrupted supply to the system during the emergency condition. Standby storage will not be less than 200 gallons per equivalent residential unit (ERU).
- Fire suppression storage must be located above an elevation that yields a 20 psi service pressure to all services in the zone under maximum day demand conditions.
- The City will provide sufficient fire suppression storage for a fire condition equal to the system's maximum fire protection water demand and required duration.
- The City's SCADA/Telemetry system will monitor high-water level and low water level conditions and will generate alarms to be received by Operations and Maintenance personnel and after hours Standby personnel.
- A water level indicator will be maintained on the City's SCADA/Telemetry system.

- Storage facilities will be located in areas where they will satisfy the following requirements:
    1. Minimize fluctuations in system pressure during normal demands;
    2. Maximize use of storage facilities during fires and maximum demands; and
    3. Improve the reliability of supply to the City.

TRANSMISSION AND DISTRIBUTION

- Where practical, transmission and distribution mains will be looped to increase reliability and fire flow capacity and decrease head losses.
- All mains will comply with the generally recognized design criteria from the AWWA and the Washington State Department of Health guidelines that follow.
    1. All new construction will be in accordance with the City of Marysville Water System Standards, a copy of which is included in **Appendix I** of this WSP.
    2. Distribution system design assumes that adequately-sized service lines will be used. All residential service lines will be 1 inch or larger. Service lines will be the same size as the meter or larger.
    3. The minimum diameter of distribution mains will be 8 inches unless otherwise approved by the City. All new water mains will be ductile iron pipe, unless corrosivity tests recommend an alternate material.
    4. All new distribution mains will be sized by hydraulic analysis.
    5. All new mains providing fire flow will be sized to provide the required fire flow at a minimum residual pressure of 20 psi and maximum pipeline velocity of 8 fps during maximum day demand conditions. In general, new water mains that will carry fire flow in residential areas shall be a minimum of 8 inches in diameter and looped for multi-family residential developments. New water mains in commercial, business park, industrial, and school areas shall be a minimum of 12 inches in diameter and looped.
    6. Valve installations will satisfy the following criteria.
        a. Zone valves will be located at all pressure zone boundaries to allow future pressure zone realignment without the need for additional pipe construction.
        b. Isolation valves will be installed in the lines to allow individual pipelines to be shut down for repair or installation of water appurtenances (tee for a fire hydrant, a valve, or other appurtenances that cannot be connected by direct tap). Unless it is impractical to do so, the distance between isolation valves will not exceed 1,000 feet. A minimum of three valves will be provided per cross and two valves per tee.
        c. Air/vacuum release valves will be placed at all high points, or "crowns," in all pipelines.
        d. Blowoff assemblies shall be located at main dead ends where there is not a fire hydrant. If a water main extension is expected in the future, the blowoff

assembly shall have a valve the same size as the main with concrete thrust blocking.

7. Individual pressure reducing valves must be installed in all customer service lines in the City where the pressure exceeds 80 psi. Pressure reducing valves protect customers from high pressures in case a mainline pressure reducing station fails and are the property of the customer. The customer is responsible for maintenance of individual pressure reducing valves.
8. Fire hydrant installations will satisfy the following criteria.
    a. Fire hydrants serving detached single-family or duplex dwellings on individual lots will be located not more than 600 feet on center, such that all single-family lots are within 300 feet from a fire hydrant, as measured along the path of vehicular access.
    b. Fire hydrants serving any use other than detached single-family or duplex dwellings on individual lots will be located not more than 300 feet on center, and will be located so that at least one hydrant is located within 150 feet of all structures, but not closer than 50 feet, unless approved by the Marysville Fire District.
    c. Hydrants located in dead-end areas or culs-de-sac shall service an area of no more than 120,000 square feet.
    d. One fire hydrant shall be installed per intersection.
    e. The Marysville Fire District will review all proposed fire hydrant installations to ensure the correct number and spacing of fire hydrants for each project.
    f. Fire hydrants shall be located and installed to facilitate unidirectional flushing activities.

SUPPLY AND BOOSTER PUMP STATIONS

- All existing and future booster pump stations will be modified/constructed to comply with the following minimum standards.
    1. All structures will be non-combustible, where practical.
    2. All buildings will have adequate heating, cooling, ventilation, insulation, lighting, and work spaces necessary for on-site operation and repair.
    3. Sites will be fenced to reduce vandalism and City liability, where appropriate.
    4. Each station will be equipped with a flow meter and all necessary instrumentation to assist personnel in operating and troubleshooting the facility.
    5. For zones where supply is provided by booster pump stations, emergency power capability will be provided to at least one booster pump station supplying each pressure zone.
- Pumps will be operated automatically, with flexibility in pump start/stop settings.
- Stations will be operated with the provision for at least two methods of control, to minimize system vulnerability.

- Manual override of stations will be provided for using the City's telemetry and supervisory control system.
- Stations will be monitored with alarms for the following conditions.
    1. Pump started manually (indicator light for pump started automatically)
    2. Power phase failure
    3. Communication failure
    4. Water in structure (flood)
    5. Low suction pressure
    6. High discharge pressure
    7. Pump failure
    8. Flow deviation (Call vs. Run)
- Stations will have the following indicators.
    1. Local flow indication and totalizing.
    2. Flow indication and totalizing to the City's SCADA/Telemetry system.
    3. Recording of combined supply flow to the system.
- Booster pump stations will be placed wherever necessary to fulfill the following criteria.
    1. Provide supply redundancy to a pressure zone.
    2. Improve the hydraulic characteristics of a pressure zone.
    3. Maximize storage availability and transmission capacity.
    4. Improve water quality (i.e., increase circulation) and quantity.

PRESSURE REDUCING STATIONS

- All pressure reducing valves will be placed in vaults that are large enough to provide ample workspace for field inspection and valve repair.
- Vaults will drain to daylight or be equipped with sump pumps to prevent vault flooding.
- Pressure relief valves will be provided on the low pressure side of the pressure reducing valves to prevent system over pressurization in case of a pressure reducing valve failure.

SUPERVISORY CONTROL

- The City's supervisory control system must be capable of efficiently operating the water system's components in accordance with this WSP, and in response to reservoir levels, system pressures, abnormal system conditions, and water costs.

MAINTENANCE

- Facility, equipment, and infrastructure breakdown is given the highest maintenance priority. Emergency repairs will be made even if overtime labor is involved.

- Equipment will be scheduled for replacement when it becomes obsolete and as funding is available.
- Worn parts will be repaired, replaced, or rebuilt before they represent a high failure probability.
- Spare parts will be stocked for all facility, equipment, and infrastructure items whose failure will impact the ability to meet other policy standards.
- Equipment and infrastructure that is out of service will be returned to service as soon as possible.
- A preventive maintenance schedule will be established for all facilities, equipment, infrastructure, and processes.
- Tools will be obtained and maintained to repair all items whose failure will impact the ability to meet other policy standards.
- Dry, heated shop space will be available for maintenance personnel to maintain facilities.
- All maintenance personnel will be trained to efficiently perform their job duties.
- Maintenance will be performed by the water division staff and supervised by the two Lead Worker 2 positions who oversee maintenance activities.
- Written records and reports showing operation and maintenance history will be maintained for each facility and item of equipment. Not all sites have a location to store records, so some records will be maintained in the maintenance operation office.

RELIABILITY

- Supply to the service area will be pursued to meet maximum day demand during a reasonable worst case supply system failure.
- System planning will determine whether connections with nearby systems will be reliable or available for use in emergency situations.
- System demand planning will use historical demand data and assume all available land will be developed at saturation.

VULNERABILITY

- Supply vulnerability analyses will determine a reasonable worst case failure for the water system. The analyses will consider the following conditions.
    1. Failure of the single largest source of supply.
    2. Reservoir out of service.
- Storage vulnerability analyses will determine a worst case failure scenario for the water system. The analyses will consider:
    1. Maximum day demand with simultaneous fire; and
    2. Peak hour demand with the largest source of supply out of service.

JOINT USE

- All joint use facilities (with other public water systems) must comply with City policies and design standards.
- All joint use facilities will be maintained by the Water Division.
- Joint use facilities will be pursued only in those areas that improve reliability or reduce operating costs.

FINANCIAL POLICIES

GENERAL

- The City will set rates that comply with standards established by the AWWA.
- Rates and additional charges established for the City should be:
    1. Cost-based rates that recover current, historical, and future costs associated with the City's water system and services;
    2. Equitable charges to recover costs from customers commensurate with the benefits they receive; and
    3. Adequate and stable source of funds to cover the current and future cash needs of the City.
- Existing City customers will pay the direct and indirect costs of operating and maintaining the facilities through user rates. In addition, the user rates will include debt service incurred to finance the capital assets of the City.
- New customers seeking to connect to the water system will be required to pay a connection charge for an equitable share of the historical cost of the system and for the system's capital improvement program (CIP). Connection charge revenues will be used to fund the CIP in conjunction with rate revenue.
- New and existing customers will be charged for extra services through separate ancillary charges based on the costs to provide the services. Ancillary charges can increase equitability and operating efficiency by discouraging unnecessary demand for services. The charges should be reviewed regularly and updated annually based on increases in the Consumer Price Index. Revenue from ancillary charges will be used to finance annual operations and maintenance.
- The City will maintain information systems that provide sufficient financial and statistical information to ensure conformance with rate setting policies and objectives.
- User charges must be sufficient to provide cash for the expenses of operating and maintaining the system. To ensure the fiscal and physical integrity of the utility, an amount should be set aside each year and retained for capital expenditures that will cover some portion of the depreciation of the physical plant. The amount may be transferred from the Operating Fund to the Capital Fund for general or specific purposes.
- A Working Capital Reserve will be maintained to cover unanticipated emergencies and fluctuations in cash flow.

- Water rates will be based on either the Base-Extra Capacity Method or the Commodity-Demand Method. Both methods strive to equitably charge customers with different service requirements based on the cost of providing water service. Service requirements relate to the total volume of water used, peak rates of use, and other factors.
- Fees and charges are calculated differently throughout the service area. City, Rural and Outside UGA customers have different base rates and usage tiers.

CONNECTION CHARGES

- Owners of properties that have not been assessed, charged, or borne an equitable share of the cost of the water system will pay one or more of the following connection charges prior to connection to a water main.
    1. Latecomers Fees: Latecomers fees are negotiated with developers and property owners; they provide for the reimbursement of a pro rata portion of the original cost of the water system extensions and facilities.
    2. Connection Charge: Connection charges will be assessed against any property that has not participated in the development of the water system. Meter charges, or hookup fees, are additional to recover the cost of meter and service line installations.
    3. Developer Extension Charges: These charges are for the administration, review, and inspection of a developer extension project.

ORGANIZATIONAL POLICIES

STAFFING

- Personnel certification will comply with state standards.
- The Water Division will promote staff training.

RELATIONSHIP WITH OTHER DEPARTMENTS

- The Finance Department is responsible for customer billing, payment collection, project cost accounting, and fund activity reporting.
- The Engineering Division is responsible for construction and oversight of capital improvement projects.
- The Community Development Department is responsible for water system development standards and review and inspection of new infrastructure built by private developers.
- The Human Resources Department is responsible for employee records, union labor negotiations, and salary schedules.
- The Fire District uses water utility facilities for fire protection and establishes fire flow requirements. They are also responsible for emergency responses to hazardous events at water system facilities.
- The Police Department and Code Enforcement Division are responsible for enforcing violations of City water ordinances.

- The Water Division is responsible for fire hydrant testing.
- The Executive Department is responsible for administering safety training and emergency and risk management.
- The Public Works Administration Division provides administrative support to the Water Division.

6 | WATER SOURCE AND QUALITY

INTRODUCTION

The two basic objectives of a water system are to provide a sufficient quantity of water to meet customer usage demands and to provide high quality water. **Chapter 7** discusses the City's ability to supply a sufficient quantity of water and identifies future source requirements. This chapter discusses the City's existing water sources, water rights, water quality regulations, and water quality monitoring results.

EXISTING WATER SOURCES AND TREATMENT

WATER SOURCES

The City's municipal water supply is provided by surface water diverted from Edward Springs; groundwater pumped from six different sites, including Edward Springs, the Stillaguamish River, the Sunnyside Well site, the Lake Goodwin Well, the Highway 9 Well, and the Cedarcrest La Joy Well; and water delivered from the City of Everett (Everett) through the JOA supply line.

Edward Springs Site

The Edward Springs site is the City's oldest source of water. Edward Springs is located at 614 Lakewood Road, Arlington, Washington. Springs emanate from the hillside in a ravine and are tributary to Cougar Creek, which is tributary to Portage Creek, which is tributary to the South Slough of the Stillaguamish River at Silvana. The Edward Springs site was first developed as a spring source as a Work Projects Administration project in the 1930s. The current capacity is approximately 1.1 million gallons per day (MGD) (760 gallons per minute (gpm)). Water is collected from the springs by approximately 23 shallow collectors. Water from some of the collector's flows by gravity to a screen house where it is pumped to the Edward Springs Treatment Facility. The remaining collectors flow by gravity directly to the Edward Springs Treatment Facility. In addition to the springs, there are currently three drilled wells in the Edward Springs watershed. Wells No. 1 and No. 2 were installed prior to 1960. Well No. 3 is located near the Edward Springs Reservoir and was installed in 1987. Wells No. 2 and 3 were rehabilitated in 2004. Well No. 1R was installed in 2004 and was put into service in 2008. Well No. 1 was properly decommissioned by a licensed well driller in September 2014. All wells are pumped to the Edward Springs Treatment Facility located adjacent to the Edward Springs Reservoir. The Washington State Department of Health (DOH) classified the spring collection system as a Groundwater under the Influence of Surface Water (GWI) source in March 2000. This classification has made the source subject to the rules and requirements of the Surface Water Treatment Rule (SWTR). Edward Springs has a controlled access watershed and water with consistently low turbidity. The City operates the Edward Springs source under the filtration avoidance clause of the SWTR through development of a Watershed Management Plan and other improvements that include fencing and signage at the watershed perimeter, and disinfection and contact time (CT) compliance improvements. In addition, the City thoroughly documents water quality history for the Edward Springs source as another requirement to continue avoiding filtration for this source. The City designed and built a chlorine disinfection system for the Edward Springs source in 2004. An ultraviolet (UV) disinfection system was installed and started operating in April 2014.

Stillaguamish River Site

The Stillaguamish River site currently consists of one Ranney well, which was constructed in 1978, situated on the left bank of the Stillaguamish River northwest of the City of Arlington at 23317 Dike Road, Arlington, Washington. The Ranney well consists of a 16-foot inner-diameter caisson set to a depth of 38 feet. Seven screened 10-inch collector lines, ranging from 72 to 100 feet in length, extend out radially from the caisson at a depth of approximately 31 feet. When the pumps are operating, subsurface water moves into the collectors and flows to the caisson, from where it is pumped to the Stillaguamish River Water Treatment Plant for treatment and is then pumped out into the distribution system. The current capacity of the two pumps installed in the Ranney well is 3.2 MGD (2,250 gpm). Because of the historic high turbidity level and the inability to control activity in the watershed, the Stillaguamish Ranney Well source is classified as a "filtration required source." The membrane facility, which is located at 17906 43rd Avenue NE, and is approximately 3.6 miles south of the Ranney well, was put in service in December 2006.

Sunnyside Site

The Sunnyside site currently consists of two wells, referred to as Sunnyside Well No. 2 and Sunnyside Well No. 1R, located at 4021 71st Avenue NE, Marysville, Washington. Sunnyside Well No. 2 was drilled in 1965 and is capable of pumping at 1.4 MGD (1,000 gpm). Sunnyside Well No. 1R was constructed in 2009 and has not yet been equipped. The wells completed at this facility (currently Sunnyside Well Nos. 1R and 2) tap an aquifer that can be found at a depth of approximately 200 feet below ground surface. The original Sunnyside Well No. 1 was properly decommissioned in March 2007 to allow for construction of Marysville Fire District Fire Station 66 on the property. Sunnyside Well No. 2 is currently maintained only as an emergency source in the event the JOA supply pipeline is offline. The source has been exercised on a quarterly basis and is tested annually, enabling the City to use it as necessary. The well was chlorinated when operated as a primary source; however, all disinfection equipment was removed when the well was reclassified for secondary use only.

As part of the Sunnyside Well Treatment Project currently under construction, the City will equip Well No. 1R with a variable frequency drive (VFD) pump capable of pumping up to 1.4 MGD (1,000 gpm), which will bring the total peak production from the site up to 2.9 MGD (2,000 gpm). Other upgrades that will be performed at the Sunnyside site include construction of a treatment facility to reduce the concentration of iron and manganese in the water to make the water more aesthetically appealing to customers. Once Sunnyside Well No. 1R is operational and the treatment facility has been constructed, the City plans to use these wells as a primary source of supply.

Cedarcrest La Joy Site

The Cedarcrest La Joy site currently has one well, referred to as the Cedarcrest La Joy Well, located at 6810 84th Street NE, Marysville, Washington on the Cedarcrest Golf Course. The Cedarcrest La Joy Well was drilled in 1954, is completed with a perforated casing at a depth of 80 to 106 feet, and is screened at a depth of 644 to 657 feet. This well is used exclusively for irrigation supply for the Cedarcrest Golf Course and operated as a standalone non-potable system. However, since the associated water right annual volume was identified as non-additive to the City's other water rights, it will be included in the water right analysis.

Highway 9 Site

The Highway 9 site currently has one well, referred to as the Highway 9 Well, located at 8812 64th Street NE, Marysville, Washington. The Highway 9 Well was drilled in 1979 with the intention of serving the 510 Pressure Zone. The well is screened from a depth of 226 to 269 feet below ground surface and can physically produce up to 1.4 MGD (1,000 gpm). The Highway 9 Well has produced water with high iron and manganese concentration since it was first brought online. Customer complaints of reddish water and stained laundry prompted the City to treat the well output with a sequestering agent to prevent the iron and manganese from precipitating. The sequestering process was effective only for a short period, and as the water was stored in the reservoir, iron precipitate formed and settled.

Compounding the iron and manganese problem was the influence of the Highway 9 Well on private wells in the area. It became evident that the aquifer had limited capacity when the water level and level of area wells dropped after a period of operation. Operating the Highway 9 Well caused water levels to drop enough that the private wells were nearly dry. The City responded by providing water service to the affected properties. In 1984, the Highway 9 Well was taken offline due to these issues. The well is only used to augment supply during emergency periods and is exercised on a quarterly basis to remain operable. The well was chlorinated when operating as a primary source; however, all disinfection equipment was removed when the well was reclassified for secondary use only.

Lake Goodwin Site

The Lake Goodwin site currently has one well. The Lake Goodwin site is located at 3914 176th Street NW, Stanwood, Washington, on the north end of Lake Goodwin. The well was originally constructed in 1968. The well is screened at a depth of 437 to 452 feet and has a current capacity of 0.5 MGD (350 gpm), which is less than the water right limit due to excessive screen clogging at the higher pumping rate. The well is connected to the City's distribution system through a 12-inch supply main. However, the well is normally isolated from the larger City system by a valve and is used to supply water primarily to the 327 Pressure Zone.

Joint Operating Agreement Supply Line

The JOA Supply Line is a 30-inch to 24-inch diameter transmission main that connects to the City of Everett's water system at Hewett Avenue and runs north to the City's Getchell Reservoir. Water is delivered to the City through this pipeline as agreed to in the Joint Operating Agreement No. 1 (JOA) with the City, Everett, Snohomish County PUD, and Tulalip Tribes. The JOA and subsequent amendments allows for the City to take up to 9,132 gpm (13.15 MGD); if taken year round, that is equal to a total of 14,730 acre-feet per year (afy) from the City of Everett's system as delivered by the JOA supply line. The JOA and subsequent amendments breaks down the rate available to each partner as shown in **Table 6-1**.

Table 6-1
Current Allocation from the JOA Supply Line

Partner	Percentage	Instantaneous Rate		Annual Volume	
		MGD	gpm	MG	Acre-feet
City of Marysville	63.65	13.15	9,132	4,800	14,730
Snohomish PUD	16.55	3.42	2,375	1,248	3,831
Tulalip Tribes	19.8	4.09	2,840	1,493	4,581
Total	100.00	20.66	14,347	7,541	23,142

The City of Everett drinking water filtration plant, located at the Lake Chaplain Reservoir in the Sultan Basin, treats the surface water before it is delivered to the City. Additional information on each of the City's existing sources is presented in **Chapter 2** and contained in **Appendix A**.

WATER TREATMENT

The City's water system is comprised of multiple treated sources, including water purchased from the City of Everett. While the Edward Springs source is GWI, it is operated under the filtration avoidance clause of the SWTR since the City developed a Watershed Management Plan and has implemented chlorine and UV disinfection, contact time, site security, and water quality monitoring improvements. Water from the Stillaguamish River is filtered and disinfected at the Stillaguamish River Water Treatment Plant. This plant was built and commissioned in 2006 and treats the river water using low-pressure, submerged membrane filtration. Edward Springs, Edward Springs Wells, Stillaguamish River, Lake Goodwin Well, and the Everett JOA Intertie are all chlorinated with 12.5-percent sodium hypochlorite. Water received from Everett is fluoridated while the City's other sources are not; therefore, customers may receive water that is fluoridated, non-fluoridated, or only partially fluoridated depending on water system operating conditions.

WATER RIGHTS AND INTERTIES

OVERVIEW

A water right is a legal authorization to use a specified amount of public water for specific beneficial purposes. The water right amount is expressed in terms of instantaneous withdrawal rate and annual withdrawal volume. Washington State law requires users of public water to receive approval from the Washington State Department of Ecology (Ecology) prior to actual use of the water. This approval is granted in the form of a water right permit, which is developed into a certificate. However, a water right is not required for certain purposes (typically individual residences) that use 5,000 gallons per day (gpd) or less of groundwater from a well.

The process of obtaining a water right involves submitting a water right application that is reviewed by Ecology. If the request is approved, a water right is issued to allow for water use to commence. A water right permit provides permission to construct the necessary wells or diversions, pumps, and pipes to start using water. The water right permit remains in effect until the permit holder determines that its project is complete and they have used as much water as they will under the water right. At that time, the permit holder files a proof of appropriation form, which attests to the

rate and volume of water used under the water right. A water right certificate is issued by Ecology following a proof of examination and determination that the amount of water put to beneficial use is consistent with the amount and conditions indicated on the water right permit.

A water right permit can only be issued by Ecology if the proposed use meets the following requirements.

- Water will be put to beneficial use.
- There will be no impairment to existing or senior rights.
- Water is physically and legally available for appropriation.
- Issuance of the requested water right will not be detrimental to the public interest.

During preparation of the report of examination, Ecology considers existing basin management plans, stream closures, minimum instream flows, hydraulic continuity (surface water interconnected to groundwater), utilization of existing water sources, water conservation, and availability of alternative water supplies, among other things. The water right decision process is increasingly becoming more complex and time consuming, due to the many competing interests for water, environmental issues, and regulatory requirements.

EXISTING WATER RIGHTS AND INTERTIES

The City currently holds one water right permit and eleven water right certificates for its independent sources of municipal water supply. In addition, the City has water available from the City of Everett through a JOA that is provided through the JOA supply pipeline. A summary of the water rights and the JOA is presented in **Table 6-2**, and the principal water right documents are contained in **Appendix J**.

Table 6-2
Existing Water Rights and Interties

Water Right	Document	Use	Source Name	Instantaneous Rate (gpm)			Annual Volume (afy)		
				Additive	Non-additive	Maximum From Source	Additive	Non-additive	Maximum From Source
SWC 184	Certificate	*Mitigation*	Edward Springs	*200*	*0*	1,392	*108.3*	*0*	2,232
		Municipal		160	0		467.7	0	
SWC 2180	Certificate	Municipal		1,032	0		1,656	0	
GWC 286	Certificate	Municipal	Edward Springs Well No. 1R	300	0	300	160	0	480
GWC 1152	Certificate	Municipal		0	300		0	320	
GWC 2096	Certificate	Municipal	Edward Springs Well No. 2	500	0	500	0	800	800
GWC 4155	Certificate	Municipal	Cedarcrest La Joy Well	57	0	57	0	91	91
GWC 3100	Certificate	Municipal	Sunnyside Well No. 1R	1,000	0	1,000	0	1,344	1,344
GWC 5469	Certificate	Municipal	Sunnyside Well No. 2	1,000	0	1,000	0	1,176	1,176
GWC 6980	Certificate	Municipal	Lake Goodwin Well	550	0	550	880	0	880
G1-00675C	Certificate	Municipal	Stillaguamish River Well	2,250	0	2,250	3,600	0	3,600
G1-23487C	Certificate	Municipal	Highway 9 Well	1,000	0	1,000	1,600	0	1,600
G1-25182P	Permit	Municipal	Edward Springs Well No. 3	400	0	400	0	451	451
			Mitigation Peak/Total	*200*	*0*		*108.3*	*0*	
			Municipal Peak/Total	**8,249**	300		**8,363.7**	4,182	
			Water Right Total	8,449	300		8,472	4,182	
			JOA Supply Line (Everett Intertie)	9,132		9,132	14,730		14,730
			Municipal Grand Total	**17,381**			**23,093.7**		

Notes:
-Takes into account mitigation requirement under SWC 184 and that that rate and volume is not available for municipal supply.
-Considers full Edward Springs surface rights to equal combined 3.1 cfs.
-0.8 cfs = 360 gpm
-2.3 cfs = 1,032 gpm
-Table represents peak usage periods of July 1 through September 30 when 200 gpm from SWC 184 is bypassed to Cougar Creek.
-8,472 afy total annual volume from Pollution Control Hearings Board Stipulation and Agreed Order of Dismissal for Case No. 96-153.
-The JOA Pipeline supplies water from the City of Everett regional water system.

The City's water right portfolio is complicated by incompatible facts within the record. For instance, a report of examination for a newer water right might contain a table summarizing all previously issued water rights and in that table, water rights that were originally issued as non-additive are shown as additive. Consistent with the previous water system plan update (HDR, 2009), it is assumed that the summary of water rights provided in the report of examination for water right G1-25182P, which is the most recently issued water right decision, and whose summary of the annual volume issued under all rights was confirmed in a Pollution Control Hearings Board (PCHB) Stipulation and Agreed Order of Dismissal for PCHB No. 96-153 in May 1997, is the most accurate representation of the City's water rights. In this summary, the annual volume of the City's water rights is 8,472 afy (**Table 6-2**). However, it should be noted that the City has agreed to use 108.3 afy for streamflow augmentation, which leaves 8,363.7 afy for municipal supply. The peak instantaneous rate available for municipal supply under the City's water rights during the period of July 1st through September 30th is 8,249 gpm, which is equivalent to 11.88 MGD (**Table 6-2**).

The City has water rights for sources located in both Water Resource Inventory Area (WRIA) 5 – Stillaguamish and WRIA 7 – Snohomish. Each water right is discussed in more detail in the following sections.

Surface Water Certificate 184

Surface Water Certificate (SWC) 184, with a priority date of July 14, 1921, currently authorizes the diversion of 0.8 cubic feet per second (cfs) from Edward Springs located in the SW ¼ SW ¼ Section 24, Township 31 North, Range 4 East W.M., in WRIA 5. As required under PCHB No. 96-153 Stipulation and Agreed Order of Dismissal, which allowed for issuance of G1-25182P, the City submitted a water change application to Ecology in June 1997 requesting to change a portion of the water right to Streamflow Augmentation of Cougar Creek. The water right change application was approved in April 1999, and a superseding certificate was issued in July 2005. This superseding certificate identified the annual volume for municipal supply as 467.7 afy and contained variable flow rates through the year for both the municipal supply and mitigation components of the right. The annual volume that is used for mitigation is 108.3 afy. **Table 6-3** shows the breakdown in instantaneous flow rate throughout the year.

Table 6-3

Instantaneous Rate Divided Between Municipal Supply and Mitigation for SWC 184

Period of Use	Water Right Total (gpm)	Municipal Rate (gpm)	Mitigation Rate (gpm)
January 1 - May 31	360	360	0
June 1 - June 30	360	260	100
July 1 - September 30	360	160	200
October 1 - October 31	360	260	100
November 1 - December 31	360	360	0

When considering if the City's water rights are sufficient to meet existing and forecast demand, the lowest municipal rate under SWC 184 of 160 gpm will be used, since that is the allowed municipal rate during the period of July 1st through September 30th, which will likely coincide with the maximum day demand.

The mitigation that the City agreed to provide to Cougar Creek from SWC 184 allowed G1-25182P to be issued. It is important for the City to continue to make sure that the appropriate level of mitigation is being provided to Cougar Creek under this water right.

Surface Water Certificate 2180

SWC 2180, with a priority date of November 14, 1931, currently authorizes the diversion of 2.3 cfs from Edward Springs located in the SW ¼ SW ¼ Section 24, Township 31 North, Range 4 East W.M., in WRIA 5. The original certificate was issued in 1945 and contained no limitation on the annual volume that can be diverted. In March 1952, the City requested to have the point of diversion moved ½ mile south, which matches the point of diversion location of SWC 184. This change was approved, and in May 1952, a certificate of change was issued that moved the point of diversion to a point of diversion in the SW ¼ SW ¼ Section 24, Township 31 North, Range 4 East W.M. In the report of examination for G1-25182, the primary additive annual volume assigned to this water right was identified as 1,656 afy, which is approximately equal to the capture and beneficial use of a continuous discharge of 2.3 cfs. As mentioned, this annual volume will be used for planning purposes.

Groundwater Certificate 286

Groundwater Certificate (GWC) 286, with a priority date of January 12, 1946, currently authorizes the withdrawal of 300 gpm and 160 afy from Edward Springs Well No. 1, located in the SW ¼ SW ¼ Section 24, Township 31 North, Range 4 East W.M., in WRIA 5. The original certificate was issued in April 1949. In September 2007, the City submitted a showing of compliance with Revised Code of Washington (RCW) 90.44.100(3) to have Edward Springs Well No. 1R included as a point of withdrawal. This water right is now fully withdrawn from Edward Springs Well No. 1R as Edward Springs Well No. 1 is no longer in use.

Groundwater Certificate 1152

GWC 1152, with a priority date of March 7, 1952, currently authorizes the withdrawal of 300 gpm (non-additive to GWC 286) and 320 afy (non-additive) from Edward Springs Well No. 1, located in the SW ¼ SW ¼ Section 24, Township 31 North, Range 4 East W.M., in WRIA 5. The original certificate was issued in April 1949. Combined, GWC 286 and GWC 1152 allow for a maximum withdrawal of 300 gpm and 480 afy from Edward Springs Well No. 1. In September 2007, the City submitted a showing of compliance with RCW 90.44.100(3) to have Edward Springs Well No. 1R included as a point of withdrawal. This water right is now fully withdrawn from Edward Springs Well No. 1R as Edward Springs Well No. 1 is no longer in use.

Groundwater Certificate 2096

GWC 2096, with a priority date of March 7, 1952, currently authorizes the withdrawal of 500 gpm and 800 afy (non-additive) from Edward Springs Well No. 2, located in the SW ¼ SW ¼ Section 24, Township 31 North, Range 4 East W.M., in WRIA 5. The original certificate was issued in December 1954. No changes have been made to this certificate since it was issued.

Groundwater Permit G1-25182P

G1-25182P, with a priority date of February 16, 1988, currently authorizes the withdrawal of 400 gpm and 451 afy (non-additive) from the Edward Springs Well No. 3 located in the SW ¼ SW ¼ Section 24, Township 31 North, Range 4 East W.M., in WRIA 5. When the original report of examination for this water right application was issued, it was appealed by the Tulalip Tribes to the Pollution Control Hearings Board (PCHB No. 96-153). Through the subsequent negotiations that followed, both parties reached agreement on a Stipulation and Agreed Order of Dismissal in May 1997. This agreement identified the total volume of the City's water rights, identified the rate of water that would be discharged to Cougar Creek under SWC 182 throughout the year, and allowed for this permit to be issued. The development schedule on this permit currently requires that the water be put to full beneficial use by April 15, 2019. No changes have been made to this permit since it was issued.

Reservoir Certificate R1-20307C

R1-20307C, with a priority date of September 29, 1972, currently authorizes the storage of 22 afy of water for municipal supply at the Edward Springs facility located in the SW ¼ Section 24, Township 31 North, Range 4 East W.M., in WRIA 5. The source of water to fill this reservoir is identified in the report of examination as SWC 2180. No changes have been made to this certificate since it was issued.

Groundwater Certificate G1-00675C

G1-00675C, with a priority date of July 14, 1970, currently authorizes the withdrawal of 2,250 gpm and 3,600 afy from the Stillaguamish River Ranney Well located in Government Lot 1, Section 3, Township 31 North, Range 5 East W.M., in WRIA 5. The original certificate was issued in July 1978. No changes have been made to this certificate since it was issued.

Groundwater Certificate 4155

GWC 4155, with a priority date of May 5, 1955, currently authorizes the withdrawal of 57 gpm and 91 afy (non-additive) from the Cedarcrest La Joy Well, located in the NW ¼ NW ¼ Section 26, Township 30 North, Range 5 East W.M., in WRIA 7. The original certificate was issued in March 1962. No changes have been made to this certificate since it was issued. Even though this water right is currently used for non-potable irrigation of a golf course, it is included in this section because the annual volume granted was non-additive to the other municipal water rights issued to the City, and the change to just golf course irrigation has occurred since the certificate was originally issued for municipal supply. Use under this water right counts against the City's municipal water right total annual volume.

Groundwater Certificate 3100

GWC 3100, with a priority date of February 14, 1956, currently authorizes the withdrawal of 1,000 gpm and 1,344 afy (non-additive) from Sunnyside Well No. 1 located in the S ½ Government Lot 3, Section 2, Township 29 North, Range 5 East W.M., in WRIA 7. The original certificate was issued in June 1958. No changes have been made to this certificate since it was issued. Sunnyside Well No. 1 was properly decommissioned in 2007. Sunnyside Well No. 1R was drilled to replace this well. However, a showing of compliance with RCW 90.44.100(3) form has yet to be filed with Ecology. This task is identified under short-term water right actions.

Groundwater Certificate 5469

GWC 5469, with a priority date of July 27, 1964, currently authorizes the withdrawal of 1,000 gpm and 1,176 afy (non-additive) from Sunnyside Well No. 2 located in Government Lot 3, Section 2, Township 29 North, Range 5 East W.M., in WRIA 7. The original certificate was issued in July 1966. No changes have been made to this certificate since it was issued.

Groundwater Certificate 6980

GWC 6980, with a priority date of June 19, 1967, currently authorizes the withdrawal of 550 gpm and 880 afy from the Lake Goodwin Well located in the NW ¼ SE ¼ SW ¼, Section 22, Township 31 North, Range 4 East W.M., in WRIA 7. The original certificate was issued in September 1970. No changes have been made to this certificate since it was issued.

Groundwater Certificate G1-23487C

G1-23487C, with a priority date of October 17, 1979, currently authorizes the withdrawal of 1,000 gpm and 1,600 afy from the Highway 9 Well located in the SE ¼ SW ¼, Section 25, Township 30 North, Range 5 East W.M., in WRIA 7. The original certificate was issued in April 1983. No changes have been made to this certificate since it was issued.

All water rights held by the City and described above are for municipal water supply purposes as defined under the Municipal Water Law (RCW 90.03.015). The place of use for each water right held

by the City for municipal water supply purposes is the same as the service area defined in the most recent Water System Plan (WSP) (**Figure 2-3**) and can be updated and changed through subsequent plans.

JOA Supply Line

This 24-inch and 30-inch diameter pipe provides the City with an intertie to Everett's regional water system. The capacity of the pipeline was calculated to be 20.66 MGD or 14,347 gpm shared between the City, Snohomish County PUD, and Tulalip Tribes. The City's current allocation from the pipeline is 13.15 MGD or 9,132 gpm, which is 63.65 percent of the total capacity.

The only limitations on this source is the instantaneous rate available to each partner. So, at most, the City could take 9,132 gpm continuously over the course of a year, which would equal a maximum annual volume of 14,730 afy.

PENDING WATER RIGHT APPLICATIONS

Reservoir Application R1-28747

Reservoir application R1-28747, with a priority date of February 11, 2013, requests that the City be able to store up to 68 afy in the North Marysville Regional Stormwater Pond No. 2, located in Section 33, Township 31 North, Range 5 East W.M. Upon review during this investigation, it was determined that the City intended to file a dam safety application for this stormwater pond, as opposed to a reservoir application, since there is no proposed beneficial use of water from the facility.

NON-POTABLE WATER RIGHTS HELD BY THE CITY

The City holds one water right that is for purposes other than potable water supply. This water right is mentioned here due to its ownership by the City, but is not included in any of the calculations when looking at the City's water supply available to meet existing or future demand.

Surface Water Certificate 11619

SWC 11619, with a priority date of July 17, 1967, currently authorizes the diversion of 0.05 cfs from unnamed springs that are tributary to Allen Creek and located in Section 7, Township 30 North, Range 5 East W.M., in WRIA 7. Allen Creek is tributary to Ebey Slough in the Snohomish River delta. The diversion is for the non-consumptive uses of fish propagation and recreation for maintenance of water levels in the Kiwanis Pond at the City's Jennings Memorial Park. The original certificate was issued in September 1971. No changes have been made to this certificate since it was issued.

WATER SUPPLY EVALUATION

An evaluation of the City's existing water rights was performed to determine the sufficiency of the water rights to meet both existing and future water demands. **Table 6-4** compares the combined maximum instantaneous water right amounts of the sources with the peak day demand of the system, and the combined maximum annual water right amounts of the sources with the average day demand of the system. As shown in the table, the City has sufficient water rights (both instantaneous and annual amounts) to meet the demands of its existing customers.

Table 6-4
Existing Water Rights Evaluation

Description	Instantaneous Rights/ Maximum Day Demand (gpm)	Annual Rights/ Average Day Demand	
		(acre-feet)	(gpm)
Total Water Rights	17,381	23,094	14,317
Existing (2014) Water Demand	5,848	5,460	3,385
Surplus (or Deficient) Rights	11,533	17,634	10,932

Table 6-5 summarizes the results of the future water rights evaluation, which compares the water rights of the existing sources with the system's future 6-year, 10-year, and 20-year demand projections. The analyses considered future demand projections with and without water use reductions from the City's planned water use efficiency efforts, as shown in the table. The results of the future water rights evaluation indicate the City has sufficient water rights to meet the demands through the year 2036.

Table 6-5
Future Water Rights Evaluation

Description	Instantaneous Rights/ Maximum Day Demand (gpm)	Annual Rights/ Average Day Demand (acre-ft)	Annual Rights/ Average Day Demand (gpm)
Year 2022 (+6 years) Without Conservation			
Total Water Rights	17,381	23,094	14,317
Projected (2022) Water Demand	7,938	5,990	3,714
Surplus (or Deficient) Rights	9,443	17,103	10,603
Year 2026 (+10 years) Without Conservation			
Total Water Rights	17,381	23,094	14,317
Projected (2026) Water Demand	8,454	6,380	3,955
Surplus (or Deficient) Rights	8,927	16,714	10,362
Year 2036 (+20 years) Without Conservation			
Total Water Rights	17,381	23,094	14,317
Projected (2036) Water Demand	9,897	7,469	4,631
Surplus (or Deficient) Rights	7,484	15,625	9,687
Year 2022 (+6 years) With Conservation			
Total Water Rights	17,381	23,094	14,317
Projected (2022) Water Demand	7,790	5,879	3,645
Surplus (or Deficient) Rights	9,591	17,214	10,672
Year 2026 (+10 years) With Conservation			
Total Water Rights	17,381	23,094	14,317
Projected (2026) Water Demand	8,179	6,172	3,827
Surplus (or Deficient) Rights	9,202	16,921	10,490
Year 2036 (+20 years) With Conservation			
Total Water Rights	17,381	23,094	14,317
Projected (2036) Water Demand	9,197	6,941	4,303
Surplus (or Deficient) Rights	8,184	16,153	10,014

WATER RIGHTS PLANNING

Although the City has sufficient water rights to supply the water system through 2036 and beyond, some administrative paperwork and facility improvements are necessary to fully utilize the City's existing water rights. In the short term, the City has the following plans for improving its water right utilization.

The following actions will provide the City flexibility with respect to operation of the Edward Springs Well Nos. 1R, 2, and 3 by allowing GWC 286, GWC 1152, GWC 2096, and G1-25182P to be withdrawn out of any combination of the three existing Edward Springs wells without being constrained by water right limits on each individual well. All public notices and wells are located in the SW ¼ SW ¼, Section 24, Township 31 North, Range 4 East W.M.

- Submit a Showing of Compliance with RCW 90.44.100(3) form to identify Edward Springs Well Nos. 2 and 3 as additional points of withdrawal under GWC 286.
- Submit a Showing of Compliance with RCW 90.44.100(3) form to identify Edward Springs Well Nos. 2 and 3 as additional points of withdrawal under GWC 1152.
- Submit a Showing of Compliance with RCW 90.44.100(3) form to identify Edward Springs Well Nos. 1R and 3 as additional points of withdrawal under GWC 2096.
- Submit a Showing of Compliance with RCW 90.44.100(3) form to identify Edward Springs Well Nos. 1R and 2 as additional points of withdrawal under G1-25182P.

The following actions will provide the City flexibility with respect to operation of the Sunnyside Well Nos. 1R and 2. It will also allow the City to pump up to the water right limit for GWC 3100 and GWC 5469. Sunnyside Well Nos. 1R and 2 are both located within the S ½, Government Lot 3, Section 2, Township 29 North, Range 3 East W.M. The public notice for GWC 3100 identified the point of withdrawal as falling within the S ½, Government Lot 3, Section 2, Township 29 North, Range 5 East W.M., while the public notice for GWC 5469 identified the point of withdrawal as falling within Government Lot 3, Section 2, Township 29 North, Range 5 East W.M. Since both wells fall within the published legal description for each water right, both wells can be included as points of withdrawal under each water right through submittal of a Showing of Compliance with RCW 90.44.100(3) form.

- Submit a Showing of Compliance with RCW 90.44.100(3) form to identify Sunnyside Well No. 1R as a replacement point of withdrawal to the previously abandoned Sunnyside Well No. 1, and include Sunnyside Well No. 2 as an additional point of withdrawal under GWC 3100.
- Submit a Showing of Compliance with RCW 90.44.100(3) form to identify Sunnyside Well No. 1R as an additional point of withdrawal under GWC 5469.
- Equip Sunnyside Well No. 1R and bring the well into production under GWC 3100 and GWC 5469.

LONG-TERM WATER SUPPLY PLANNING

The existing sources of supply for the City's water system are a mixture of City owned and operated spring and ground water sources in both WRIA 5 and WRIA 7 authorized under City-held water rights, combined with receipt of treated water from the City of Everett's regional system through the

JOA supply line. As the City moves forward, its intention is to rehabilitate and upgrade its facilities to allow for full utilization of its City-owned sources up to the water right limits.

FEASIBILITY OF OBTAINING NEW WATER RIGHTS

When considering supply redundancy, one option to investigate is the ability to obtain new water rights for municipal purposes. The City's current water sources and municipal boundary fall within both WRIA 5 – Stillaguamish (northern edge of the City) and WRIA 7 – Snohomish (majority of the City). Both WRIAs have administrative rules that establish the requirements that must be met before there can be an issuance of new water rights.

The administrative rule for WRIA 5 – Stillaguamish is Chapter 173-505 Washington Administrative Code (WAC), Instream Resources Protection and Water Resources Program, Stillaguamish River Basin, which became effective on September 26, 2005. In this rule, Ecology created minimum instream flows for a number of streams, and also determined that no water is available for additional year-round appropriation from rivers, streams, and tributaries in WRIA 5. The findings severely limit where and if the City can obtain a new water right. For the City to obtain a new water right, the groundwater withdrawn either would not have an impact on any fresh surface water body, or would have a mitigation plan offsetting any impacts to the closed surface water bodies.

The administrative rule for WRIA 7 – Snohomish is Chapter 173-507 WAC, Instream Resources Protection Program, Snohomish River Basin, which became effective on October 7, 1979. In this rule, Ecology created minimum instream flows for a number of rivers and streams and established low flow limitations and year-round closures on many other streams. The most controlling regulation on water bodies in proximity to the City includes a year-round closure of Quilceda Creek, which flows through the City. WAC 173-507-040 also states that, "In future permitting actions related to ground water withdrawals, the natural interrelationship of surface and ground waters shall be fully considered in water allocation decisions to assure compliance with the meaning and intent of this regulation." This statement, and subsequent case law, means that no impact is allowed to Quilceda Creek, even if it is small, and that any impacts would need to be mitigated fully before a water right could be issued.

Obtaining new water rights near the City in either WRIA 5 or WRIA 7 will be very difficult and require that a mitigation package be presented to Ecology.

FEASIBILITY OF TRANSFERRING EXISTING WATER RIGHTS

The City will remain aware of the following scenario to make sure that it takes advantage of opportunities to obtain additional existing water rights should they present themselves.

If an existing industry or development that holds its own water rights requests to be hooked up to the City's water system, the City should investigate the feasibility of obtaining ownership of the water right for use within its system. If the water right is determined to be valid for a rate and quantity of water that is desirable to the City, the City will decide if it would like to either add the existing source of supply to its portfolio, or transfer the water right to one or more of the City's existing sources. If the water right is desired, at the time of the service agreement, the City will negotiate to have the water right ownership transferred to the City as part of the service agreement. Then, the City will work with Ecology and DOH to integrate the water right into its water system.

DRINKING WATER REGULATIONS

OVERVIEW

The quality of drinking water in the United States is regulated by the Environmental Protection Agency (EPA). Under provisions of the Safe Drinking Water Act (SDWA), the EPA is allowed to delegate primary enforcement responsibility for water quality control to each state. In the State of Washington, the DOH is the agency responsible for implementing and enforcing the drinking water regulations. For the State of Washington to maintain primacy (delegated authority to implement requirements) under the SDWA, the state must adopt drinking water regulations that are at least as stringent as the federal regulations. In meeting these requirements, the State, in cooperation with the EPA, has published drinking water regulations that are contained in Chapter 246-290 WAC.

EXISTING REGULATIONS

The Federal SDWA was enacted in 1974, as a result of public concern about water quality. The SDWA sets standards for the quality of drinking water and requires water treatment, if these standards are not met. The SDWA also sets water testing schedules and methods that water systems must follow. In 1986, the SDWA was amended as a result of additional public concern and frequent contamination of groundwater from industrial solvents and pesticides. The 1986 Amendments require water systems to monitor and treat for a continuously increasing number of water contaminants identified in the new federal regulations. The EPA regulated approximately 20 contaminants between 1974 and 1986. The 1986 Amendments identified 83 contaminants that EPA was required to regulate by 1989. Implementation of the new regulations has been marginally successful due to the complexity of the regulations and the associated high costs. To rectify the slow implementation of the new regulations, the SDWA was amended again and re-authorized in August of 1996.

In response to the 1986 SDWA Amendments, EPA established six rules, known as the Phase I Rule, Phase II and IIb Rules, Phase V Rule, Surface Water Treatment Rule, Total Coliform Rule, and Lead and Copper Rule. The EPA regulates most chemical contaminants through the Phase I, II, IIb, and V Rules. The City's active sources are affected by many of these rules.

The EPA set two limits for each contaminant that is regulated under the rules. The first limit is a health goal, referred to as the Maximum Contaminant Level Goal (MCLG). The MCLG is zero for many contaminants, especially known cancer-causing agents (carcinogens). The second limit is a legal limit, referred to as the Maximum Contaminant Level (MCL). The MCLs are equal to or higher than the MCLGs; however, most MCLs and MCLGs are the same, except for contaminants that are regulated as carcinogens. The health goals (MCLGs) for carcinogens are typically zero, because they cause cancer and it is assumed that any amount of exposure may pose some risk of cancer. A summary of each rule follows.

To fully understand the discussion that follows, a brief definition of several key terms is provided below.

- Organic Chemicals – Animal or plant produced substances containing carbon and other elements such as hydrogen and oxygen.
- Synthetic Organic Chemicals (SOCs) – Man-made organic substances, including herbicides, pesticides, and various industrial chemicals and solvents.

- Volatile Organic Chemicals (VOCs) – Chemicals, as liquids, that evaporate easily into the air.
- Inorganic Chemicals (IOCs) – Chemicals of mineral origin that are naturally occurring elements. These include metals such as lead and cadmium.

Phase I Rule

The Phase I Rule, which was the EPA's first response to the 1986 Amendments, was published in the Federal Register on July 8, 1987, and became effective on January 9, 1989. This rule provided limits for eight VOCs that may be present in drinking water. VOCs are used by industries in the manufacturing of rubber, pesticides, deodorants, solvents, plastics, and other chemicals. VOCs are found in everyday items such as gasoline, paints, thinners, lighter fluid, mothballs, and glue, and are typically encountered at dry cleaners, automotive service stations, and elsewhere in industrial processes. The City currently complies with all contaminant monitoring requirements under this rule.

Phase II and IIb Rules

The Phase II and IIb Rules were published in the Federal Register on January 30, 1991, and July 1, 1991, and became effective on July 30, 1992, and January 1, 1993, respectively. These rules updated and created limits for 38 contaminants (organics and inorganics), of which 27 were newly regulated. Some of the contaminants are frequently applied agricultural chemicals (nitrate), while others are more obscure industrial chemicals. The City currently complies with all contaminant monitoring requirements under this rule.

Phase V Rule

The Phase V Rule was published in the Federal Register on July 17, 1992, and became effective on January 17, 1994. This rule set standards for 23 additional contaminants, of which 18 are organic chemicals (mostly pesticides and herbicides) and 5 are IOCs (such as cyanide). The City currently complies with all contaminant monitoring requirements under this rule.

Surface Water Treatment Rule

The SWTR was published in the Federal Register on June 29, 1989, and became effective on December 31, 1990. Surface water sources, such as rivers, lakes, and reservoirs (which are open to the atmosphere and subject to surface runoff), and GWI sources are governed by this rule. The SWTR seeks to prevent waterborne diseases caused by the microbes *Cryptosporidium, Legionella,* and *Giardia lamblia*, which are present in most surface waters. The rule requires disinfection of all surface water and GWI sources. All surface water and GWI sources must also be filtered, unless a filtration waiver is granted. A filtration waiver may be granted to systems with pristine sources that continuously meet stringent source water quality and protection requirements. The City currently filters and chlorinates its Stillaguamish River source and disinfects its Edward Springs source to comply with the requirements of this rule.

Interim Enhanced Surface Water Treatment Rule

The EPA proposed the Interim Enhanced Surface Water Treatment Rule (IESWTR) on July 29, 1994. The final rule was published in the Federal Register on December 16, 1998, and became effective on February 16, 1999, concurrent with the Stage 1 Disinfectants/Disinfection Byproducts Rule. The rule primarily applies to public water systems that serve 10,000 or more people and use

surface water or GWI sources. The rule also requires primacy agencies (i.e., DOH in Washington State) to conduct sanitary surveys of all surface water and GWI systems, regardless of size. The rule is the first to directly regulate the protozoan *Cryptosporidium* and has set the MCLG for *Cryptosporidium* at zero. Water systems affected by this rule needed to comply with it by December 16, 2001. The City currently filters and chlorinates its Stillaguamish River source and disinfects its Edward Springs source to comply with the requirements of this rule.

Long Term 1 Enhanced Surface Water Treatment Rule

This is the follow-up rule to the IESWTR and became effective in December of 1998. The final Long Term 1 Enhanced Surface Water Treatment Rule (LT1ESWTR) was published on January 14, 2002, and became effective February 13, 2002. The rule addresses water systems using surface water or GWI sources serving fewer than 10,000 people. The rule extends protections against *Cryptosporidium* for smaller water systems. The City currently filters and chlorinates its Stillaguamish River source and disinfects its Edward Springs source to comply with the requirements of this rule.

Revised Total Coliform Rule

The Total Coliform Rule was published in the Federal Register on June 29, 1989, and became effective on December 31, 1990. The rule set both health goals (MCLGs) and legal limits (MCLs) for total coliform levels in drinking water, and the type and frequency of testing that is required for water systems. The rule requires more monitoring than prior requirements, especially for small systems. In addition, every public water system is required to develop a coliform monitoring plan, subject to approval by DOH.

On February 13, 2013, the EPA published revisions to the rule in the Federal Register, which sets an MCL for *Escherichia Coli (E. coli)*, and specifies the frequency and timing of coliform testing based on population served, public water system type, and source water type. Water systems that are vulnerable to microbial contamination must conduct an assessment of their system and fix any sanitary defects.

Coliform is a group of bacteria, some of which live in the digestive tract of humans and many animals, and are excreted in large numbers with feces. Coliform can be found in sewage, soils, surface waters, and vegetation. The presence of any coliform in drinking water indicates a potential health risk and potential waterborne disease outbreak, which may include gastroenteric infections, dysentery, hepatitis, typhoid fever, cholera, and other infectious diseases. *E. coli* is a member of the coliform group which is almost exclusively of fecal origin, and their presence can lead to increased health risks.

The rule established the health goals for total coliform and *E. coli* at zero. To comply with the legal limit, systems may not find coliform in more than 5 percent of the samples taken each month. For systems like the City that must take ten samples per month (eight in July and August), one sample that contains coliform would exceed the legal limit and trigger the follow-up sampling requirements. A copy of the City's Water Quality Monitoring Plan, including the coliform monitoring program, is contained in **Appendix K**.

Lead and Copper Rule

The Lead and Copper Rule was published in the Federal Register on June 7, 1991, and became effective on December 7, 1992. On January 12, 2000, the EPA published minor revisions to the rule in the Federal Register, which primarily improved the implementation of the rule. On June 29, 2004,

additional minor revisions and clarifications on several requirements of the Lead and Copper Rule were published by the EPA. The rule identifies action levels for both lead and copper. An action level is different than an MCL. An MCL is a legal limit for a contaminant, and an action level is a trigger for additional prevention or removal steps. The action level for lead is greater than 0.015 milligrams per liter (mg/L). The action level for copper is greater than 1.3 mg/L. If the 90th percentile concentration of either lead or copper from the group of samples exceeds these action levels, a corrosion control study must be undertaken to evaluate strategies and make recommendations for reducing the lead or copper concentration below the action levels. The rule requires systems that exceed the lead level to educate the affected public about reducing its lead intake. Systems that continue to exceed the lead action level after implementing corrosion control and source water treatment may be required to replace piping in the system that contains lead sources. Corrosion control is typically accomplished by increasing the pH of the water to make it less corrosive, which reduces its ability to break down water pipes and absorb lead or copper.

Lead is a common metal found throughout the environment in lead-based paint, air, soil, household dust, food, certain types of pottery, porcelain, pewter, brass, and water. Lead can pose a significant health risk if too much of it enters the body. Lead builds up in the body over many years and can cause damage to the brain, red blood cells, and kidneys. The greatest risk is to young children and pregnant women. Lead can slow normal mental and physical development of growing bodies.

Copper is a common, natural, and useful metal found in our environment. It is also a trace element needed in most human diets. The primary impact of elevated copper levels in water systems is stained plumbing fixtures. At certain levels (well above the action levels), copper may cause nausea, vomiting, and diarrhea. It can also lead to serious health problems in people with Wilson's disease. Long-term exposure to elevated levels of copper in drinking water could also increase the risk of liver and kidney damage. The City currently complies with all contaminant monitoring and treatment requirements under this rule.

Radionuclides Rule

The EPA established interim drinking water regulations for radionuclides in 1976 under the SDWA. MCLs were established for alpha, beta, and photon emitters, and radium 226/228. Radionuclides are elements that undergo a process of natural decay and emit radiation in the form of alpha or beta particles and gamma photons. The radiation can cause various kinds of cancers, depending on the type of radionuclide exposure from drinking water. The regulations address both man-made and naturally occurring radionuclides in drinking water.

The 1986 Amendments to the SDWA finalized the regulations for radionuclides by eliminating the term "interim." The amendments also directed the EPA to promulgate health-based MCLGs, as well as MCLs. The EPA failed to meet the statutory schedules for promulgating the radionuclide regulations, which resulted in a lawsuit. In 1991, the EPA proposed revisions to the regulations, but a final regulation based on the proposal was never promulgated. The 1996 Amendments to the SDWA directed the EPA to revise a portion of the earlier proposed revisions, adopt a schedule, and review and revise the regulations every 6 years, as appropriate, to maintain or improve public health protection. Subsequent to the 1996 Amendments, a 1996 court order required the EPA to either finalize the 1991 proposal for radionuclides or to ratify the existing standards by November 2000.

The final rule was published in the Federal Register on December 7, 2000, and became effective on December 8, 2003. The rule established an MCLG of zero for the four regulated contaminates and MCLs of 5 picocuries per liter (pCi/L) for combined radium-226 and radium-228, 15 pCi/L for

gross alpha (excluding radon and uranium), 4 millirems per year (mrem/year) for beta particle and photon radioactivity, and 30 micrograms per liter (μg/L) for uranium. The City currently complies with all contaminant monitoring requirements under this rule.

Watershed Control Program

The Washington State mandate for watershed protection and the required elements of a watershed control program are contained in WAC 246-290-135, Source Protection, which became effective in July of 1994. In Washington State, DOH is the lead agency for the development and administration of the State's Watershed Control Program.

A watershed control program is a proactive and ongoing effort of a water purveyor to exercise surveillance over the conditions and activities within the watershed affecting source water quality to protect the health of its customers, as outlined in WAC 246-290-668, Watershed Control. All federally defined Group A public water systems that use surface water or groundwater as their source are required to develop and implement a watershed control program. All required elements of a watershed control program must be documented and included in the purveyor's Water System Plan (applicable to the City) or Small Water System Management Program (not applicable to the City) at least every 6 years. A copy of the City's Watershed Control Program is contained in **Appendix L**.

Wellhead Protection Program

Section 1428 of the 1986 SDWA Amendments mandates that each state develop a wellhead protection program. The Washington State mandate for wellhead protection, and the required elements of a wellhead protection program, is contained in WAC 246-290-135, Source Protection, which became effective in July of 1994. In Washington State, DOH is the lead agency for the development and administration of the State's wellhead protection program.

A wellhead protection program is a proactive and ongoing effort of a water purveyor to protect the health of its customers by preventing contamination of the groundwater that it supplies for drinking water. All federally defined Group A public water systems that use groundwater as their source are required to develop and implement a wellhead protection program. All required elements of a local wellhead protection program must be documented and included in either the Water System Plan (applicable to the City) or a Small Water System Management Program document (not applicable to the City). A copy of the City's Wellhead Protection Program is contained in **Appendix M**.

Consumer Confidence Report

The final rule for the Consumer Confidence Report (CCR) was published in the Federal Register on August 19, 1998, and became effective on September 18, 1998. Minor revisions were posted in the Federal Register on May 4, 2000. The CCR is the centerpiece of the right-to-know provisions of the 1996 Amendments to the SDWA. All community water systems, like the City, were required to issue the first report to customers by October 19, 1999. The annual report must be updated and re-issued to all customers by July 1st of each year thereafter.

The CCR is a report on the quality of water that was delivered to the system during the previous calendar year. The reports must contain certain specific elements, but may also contain other information that the purveyor deems appropriate for public education. Some, but not all, of the information that is required in the reports includes the source and type of the drinking water, type of treatment, contaminants that have been detected in the water, potential health effects of the

contaminants, identification of the likely source of contamination, violations of monitoring and reporting, and variances or exemptions to the drinking water regulations. A copy of the City's most recent CCR is contained in **Appendix N**.

Stage 1 Disinfectants/Disinfection Byproducts Rule

Disinfection byproducts (DBPs) are formed when free chlorine reacts with organic substances, most of which occur naturally. These organic substances (called precursors) are a complex and variable mixture of compounds. The DBPs themselves may pose health risks. Trihalomethanes (THM) are a category of DBPs that had been regulated previous to this rule. However, systems with groundwater sources that serve a population of less than 10,000 were not previously required to monitor for THM.

The EPA proposed the Stage 1 Disinfectants/Disinfection Byproducts Rule (D/DBPR) on July 29, 1994. The final rule was published in the Federal Register on December 16, 1998, and became effective on February 16, 1999. The rule applies to the City and most other water systems, including systems serving fewer than 10,000 people that add a chemical disinfectant to the drinking water during any part of the treatment process. The rule reduced the MCL for total THM, which are a composite measure of four individual THM, from the previous interim level of 0.10 mg/L to 0.08 mg/L. The rule established MCLs and requires monitoring of three additional categories of DBPs (0.06 mg/L for five haloacetic acids (HAA5), 0.01 mg/L for bromate, and 1.0 mg/L for chlorite). The rule established maximum residual disinfectant levels for chlorine (4.0 mg/L), chloramines (4.0 mg/L), and chlorine dioxide (0.8 mg/L). The rule also requires systems using surface water or groundwater directly influenced by surface water to implement enhanced coagulation or softening to remove DBP precursors, unless alternative criteria are met. Compliance with this rule must have been satisfied by December 16, 2001 for large surface water systems (those serving over 10,000 people, i.e., the City) and by December 16, 2003 for smaller surface water systems and all groundwater systems. The City currently complies with all contaminant monitoring requirements under this rule.

Unregulated Contaminant Monitoring Regulation

The EPA established the Unregulated Contaminant Monitoring Regulation (UCMR) to generate data on contaminants that are being considered for inclusion in new drinking water standards. The information collected by select public water systems will ensure that future regulations established by the EPA are based on sound science. The rule was first published in the Federal Register on September 17, 1999, and was subsequently amended on March 2, 2000, and January 11, 2001. The UCMR became effective on January 1, 2001.

Three separate lists of unregulated contaminants are maintained under the UCMR: List 1, List 2, and List 3. Contaminants are organized on the tiered lists based on the availability of standard testing procedures and the known occurrence of each contaminant, with List 1 containing contaminants that have established standard testing procedures and some, but insufficient, information on their occurrence in drinking water. Monitoring for contaminants on the three lists is limited to a maximum of 30 contaminants within a 5-year monitoring cycle, and the EPA is required to publish new contaminant monitoring lists every 5 years. As new lists are published, contaminants will be moved up in the lists if adequate information is found to support additional monitoring. All public water systems serving more than 10,000 people and a randomly selected group of smaller water systems are required to monitor for contaminants. The City currently monitors for some unregulated contaminants.

Arsenic

The EPA established interim drinking water regulations for arsenic in 1976 under the SDWA. Arsenic is highly toxic, affects the skin and nervous system, and may cause cancer. The 1996 SDWA Amendments require the EPA to conduct research to assess health risks associated with exposure to low levels of arsenic. The EPA issued a proposed regulation on June 22, 2000, and allowed a 90-day public review period. The final rule, which was published in the Federal Register on January 22, 2001, was to become effective on March 23, 2001, except for certain amendments to several sections of the rule. Because of the national debate regarding the science and costs related to the rule, the EPA announced on May 22, 2001, that it was delaying the effective date for the rule to allow time to reassess the rule and afford the public a full opportunity to provide further input. On October 31, 2001, the EPA reaffirmed the final rule as published on January 22, 2001. The Arsenic Rule subsequently became effective on February 22, 2002.

The rule sets the MCLG of arsenic at zero and reduces the MCL from the previous standard of 0.05 mg/L to 0.01 mg/L. Arsenic's monitoring requirements will be consistent with the existing requirements for other inorganic contaminants. The City complies with this rule since its surface and groundwater sources have naturally low levels of arsenic that are below the MCL.

Filter Backwash Recycling Rule

The 1996 SDWA Amendments required the EPA to promulgate a regulation governing the recycling of filter backwash water within public water systems' treatment processes. Public water systems using surface water or groundwater under the direct influence of surface water that utilize filtration processes and recycling must comply with this rule. The rule aims to reduce risks associated with recycling contaminants removed during filtration. The EPA issued a proposed regulation on June 22, 2000, and allowed a 90-day public review period. The final rule was published in the Federal Register on June 8, 2001, and became effective on August 7, 2001.

The rule requires filter backwash water be returned to a location that allows complete treatment. In addition, filtration systems must provide detailed information regarding the treatment and recycling process to the state. The regulation requires water systems to have complied with the rule starting December 8, 2003, if filter backwash water was recycled. The Stillaguamish River Water Treatment Facility does not recycle backwash water; therefore, this rule does not apply to the City.

Stage 2 Disinfectants/Disinfection Byproducts Rule

This rule is the second part of the D/DBPR, of which Stage 1 D/DBPR became effective in February 1999. The Stage 2 D/DBPR was published on January 4, 2006, in the Federal Register and became effective on March 6, 2006. The EPA implemented this rule simultaneously with the Long Term 2 Enhanced Surface Water Treatment Rule.

Similar to the Stage 1 D/DBPR, this rule applies to most water systems that add a disinfectant to the drinking water other than ultraviolet light or those systems that deliver such water. The Stage 2 D/DBPR changes the calculation procedure requirement of the MCLs for two groups of disinfection byproducts, total THM (TTHM) and HAA5. The rule requires each sampling location to determine compliance with MCLs based on their individual annual average DBP levels (termed the Locational Running Annual Average), rather than utilizing a system-wide annual average. The rule also proposes new MCLGs for chloroform (0.07 mg/L), trichloroacetic acid (0.02 mg/L), and monochloroacetic acid (0.03 mg/L).

Additionally, the rule requires systems to document peak DBP levels and prepare an Initial Distribution System Evaluation (IDSE) to identify Stage 2 D/DBPR compliance monitoring sites. IDSEs require each water system to prepare a separate IDSE plan and report, with the exception of those systems who obtain a 40/30 Certification or a Very Small System Waiver. In order to qualify for the 40/30 Certification, all samples collected during Stage 1 monitoring must have TTHM and HAA5 levels less than or equal to 0.040 mg/L and 0.030 mg/L, respectively. The City currently complies with all contaminant monitoring requirements under this rule and has completed its IDSE plan, which is included in **Appendix O**.

Long Term 2 Enhanced Surface Water Treatment Rule

Following the publishing of the IESWTR, the EPA introduced the LT1ESWTR to supplement the preceding regulations. The second part of the regulations of the LT1ESWTR, which became effective in February 2002, are mandated in the Long Term 2 Enhanced Surface Water Treatment Rule (LT2ESWTR). The final rule was published in the Federal Register on January 5, 2006, and became effective on March 6, 2006. The final rule was implemented simultaneously with the Stage 2 D/DBPR described in the previous section. This rule applies to all systems that use surface water or GWI sources.

This rule establishes treatment technique requirements for filtered systems based on their risk level for contamination, calculated from the system's average *Cryptosporidium* concentration. Requirements include up to 2.5-log *Cryptosporidium* treatment, in addition to existing requirements under the IESWTR and LT1ESWTR. Filtered systems that demonstrate low levels of risk will not be required to provide additional treatment. Unfiltered systems under this rule must achieve at least a 2-log inactivation of *Cryptosporidium* if the mean level in the source water remains below 0.01 oocysts/L. If an unfiltered system's mean level of *Cryptosporidium* exceeds 0.01 oocysts/L, the LT2ESWTR requires the system to provide a minimum 3-log inactivation of *Cryptosporidium*. All unfiltered systems are also required to utilize a minimum of two disinfectants in their treatment process.

The LT2ESWTR also addresses systems with unfinished water storage facilities. Under this rule, systems must either cover their storage facilities or achieve inactivation and/or removal of 4-log virus, 3-log *Giardia lamblia,* and 2-log *Cryptosporidium* on a state-approved schedule. Lastly, the rule extends the requirement of the disinfection profiles mandated under the LT1ESWTR to the proposed Stage 2 D/DBPR. The City currently filters and chlorinates its Stillaguamish River source and disinfects its Edward Springs source to comply with the requirements of this rule.

Groundwater Rule

The EPA promulgated the Groundwater Rule (GWR) to reduce the risk of exposure to fecal contamination that may be present in public water systems that use groundwater sources. The GWR also specifies when corrective action (which may include disinfection) is required to protect consumers who receive water from groundwater systems from bacteria and viruses. The GWR applies to public water systems that use groundwater and to any system that mixes surface and ground waters if the groundwater is added directly to the distribution system and provided to consumers without treatment equivalent to surface water treatment. The final rule was published in the Federal Register on November 8, 2006, and became effective on January 8, 2007.

The rule targets risks through an approach that relies on the four following major components.

1. Periodic sanitary surveys of groundwater systems that require the evaluation of eight critical elements and the identification of significant deficiencies (such as a well located near a

leaking septic system). States had to complete the initial survey for most community water systems by December 31, 2012, and for community water systems with outstanding performance and all non-community water systems by December 31, 2014. DOH conducted its most recent sanitary survey of the City's water system on October 4, 2007, under the state's existing sanitary survey program.

2. Source water monitoring to test for the presence of *E. coli*, enterococci, or coliphage in the sample. There are two monitoring provisions.
    - Triggered monitoring for systems that do not already provide treatment that achieves at least 99.99-percent (4-log) inactivation or removal of viruses and that have a total coliform positive routine sample under the Total Coliform Rule sampling in the distribution system.
    - Assessment monitoring is a complement to triggered monitoring. A state has the option to require systems to conduct source water assessment monitoring at any time to help identify high risk systems.
3. Corrective actions required for any system with a significant deficiency or source water fecal contamination. The system must implement one or more of the following corrective action options: correct all significant deficiencies; eliminate the source of contamination; provide an alternate source of water; or provide treatment that reliably achieves 99.99-percent inactivation or removal of viruses.
4. Compliance monitoring to ensure that treatment technology installed to treat drinking water reliably achieves at least 99.99-percent inactivation or removal of viruses.

The compliance date for requirements of this rule other than the sanitary survey was December 1, 2009. The City's last sanitary survey was completed in April 2011. The City is currently addressing minor deficiencies identified in this sanitary survey and complies with all other requirements of the rule.

FUTURE REGULATIONS

Drinking water regulations are continuously changing in an effort to provide higher quality and safer drinking water. Modifications to the existing rules described above and implementation of new rules are planned for the near future. A summary of upcoming drinking water regulations that will most likely affect the City is presented in the following sections.

Radon

In July of 1991, the EPA proposed a regulation for radon, as well as three other radionuclides. The 1996 SDWA Amendments required the EPA to withdraw the 1991 proposal due to several concerns that were raised during the comment period. A new proposed regulation was published in the Federal Register on November 2, 1999. Comments on the proposed rule were due to the EPA by February 4, 2000. Final federal requirements for addressing radon were delayed until 2008 but have not yet been published. The rule proposes a 300 pCi/L MCL for community water systems that use groundwater or an alternative, less stringent MCL of 4,000 pCi/L for water systems where their state implements an EPA-approved program to reduce radon risks in household indoor air and tap water. It is not currently known when or what a radon regulation may require as adopted by the EPA or what the implementation schedule for the rule will be. Because the final radon rule requirements are uncertain, the impact of this rule on the City is unknown at this time.

Unregulated Contaminant Monitoring Regulation Revisions

In accordance with the original UCMR and the SDWA, once every 5 years the EPA will issue a new list of no more than 30 unregulated contaminants to be monitored by public water systems. The fourth UCMR was proposed on December 11, 2015, and includes a list of 30 chemicals that will be monitored during the 2017 through 2021 monitoring cycle, and approves several new testing methods to conduct the monitoring. For this upcoming cycle, all systems serving more than 10,000 people and a larger representative sample of smaller water systems will be required to monitor for contaminants. The rule also requires additional water system data to be reported with the monitoring results, establishes a procedure for determining minimum reporting levels, and proposes several revisions to the implementation of the monitoring program.

SOURCE WATER QUALITY

This section presents the current water quality standards for groundwater sources and the results of the City's recent source water quality monitoring efforts. A discussion of the water quality requirements and monitoring results for the City's distribution system is presented in the section that follows.

DRINKING WATER STANDARDS

Drinking water quality is regulated at the federal level by the EPA and at the state level by DOH. Drinking water standards have been established to maintain high-quality drinking water by limiting the levels of specific contaminants (i.e., regulated contaminants) that can adversely affect public health and are known or likely to occur in public water systems. Non-regulated contaminants do not have established water quality standards and are generally monitored at the discretion of the water purveyor and in the interest of customers.

The regulated contaminants are grouped into two categories of standards – primary and secondary. Primary standards are drinking water standards for contaminants that could affect health. Water purveyors are required by law to monitor and comply with these standards and notify the public if water quality does not meet any one of the standards. Secondary standards are drinking water standards for contaminants that have aesthetic effects, such as unpleasant taste, odor, or color (staining). The national secondary standards are unenforceable federal guidelines or goals where federal law does not require water systems to comply with them. However, states may adopt their own enforceable regulations governing these contaminants. The State of Washington has adopted regulations that require compliance with some of the secondary standards. Water purveyors are not required to notify the public if their water quality does not meet the secondary standards.

SOURCE MONITORING REQUIREMENTS AND WAIVERS

The City is required to perform water quality monitoring at each of its active sources for inorganic chemical and physical substances, organic chemicals, and radionuclides. The monitoring requirements that the City must comply with are specified in WAC 246-290-300. A description of the source water quality monitoring requirements and procedures for each group of substances is contained in the City's Water Quality Monitoring Plan, which is included as **Appendix K**.

In 1994, DOH developed the Susceptibility Assessment Survey Form for water purveyors to complete for use in determining a drinking water source's potential for contamination. The results of the susceptibility assessment may provide monitoring waivers that allow reduced source water

quality monitoring. Based on the results of the susceptibility assessment survey for each source, DOH assigned high susceptibility ratings to Edward Springs and the Stillaguamish River, a moderate susceptibility rating for Edward Springs Well No. 2, and low susceptibility ratings for Lake Goodwin Well, Edward Springs Well No. 3, and Edward Springs Well No. 1R.

SOURCE MONITORING RESULTS

The quality of the City's groundwater sources has been good and meets or exceeds all drinking water standards, except for manganese levels slightly higher than its secondary MCL at Lake Goodwin Well. IOCs and physical substances were last monitored at Edward Springs in 2013, the Stillaguamish River in 2010, and Lake Goodwin Well in 2010. The City currently has an IOC waiver for these sources from 2011 through 2019. VOCs were last monitored at Edward Springs in 2013, the Stillaguamish River in 2010, and Lake Goodwin Well in 2012. The City currently has a VOC waiver for these sources from 2014 through 2019. Nitrate monitoring has been performed annually. As required by DOH, monitoring for radionuclides was completed at Edward Springs in 2010 and at Lake Goodwin Well in 2009. The next radionuclides sample for the Stillaguamish River and Lake Goodwin Well was due in November 2015 for the January 2014 through December 2019 6-year compliance period.

The results of inorganic chemical (including nitrate) and VOC monitoring for the City's sources indicate that all primary standards were met. All secondary standards were also met at the sources, except for high manganese levels at Lake Goodwin Well.

DISTRIBUTION SYSTEM WATER QUALITY

MONITORING REQUIREMENTS AND RESULTS

The City is required to perform water quality monitoring within the distribution system for coliform bacteria, disinfectant (chlorine) residual concentration, DBPs, lead and copper, and asbestos in accordance with Chapter 246-290 WAC. A description of the distribution system water quality monitoring requirements and procedures are contained in the City's Water Quality Monitoring Plan that is included in **Appendix K**.

The City has been in compliance with all monitoring requirements for the past several years, except for some coliform violations that are described in the following section. A summary of the results of the distribution system water quality monitoring within the City's system is also presented.

Coliform Monitoring

From 2007 to 2013, coliform monitoring met regulations since samples did not test positive in more than 5 percent of the routine samples taken each month. Two positive samples were found in 2009 (0.2 percent) and one positive sample was found in 2013 (0.1 percent). Based on the City's current population, a minimum of 70 coliform samples per month from different locations throughout the system are required to be collected.

Disinfectant Residual Concentration Monitoring

Disinfection requirements applicable to the City are contained in WAC 246-290-310, which states that a disinfectant residual concentration shall be detectable in all active parts of the distribution system and that the maximum residual disinfectant level shall be 4.0 mg/L for chlorine and

chloramines. The City's chlorination targets are to maintain a free chlorine residual above 0.2 mg/L at the Edward Springs and Stillaguamish treatment plant entry points to distribution at all times, and to ensure a distribution free chlorine residual that is equal to or above 0.05 mg/L in less than 95 percent of monthly samples. In 2014, free chlorine ranged between 0.02 and 1.62 mg/L and averaged 0.75 mg/L throughout the distribution system. The water samples collected by the City for coliform analysis are also tested for residual disinfectant concentration. The results of residual disinfectant concentration tests indicate that the City is in compliance with the regulations.

Disinfectants/Disinfection Byproducts Monitoring

THM and HAA5 are DBPs that are formed when free chlorine reacts with organic substances (i.e., precursors), most of which occur naturally. Formation of THM and HAA5 are dependent on such factors as amount and type of chlorine used, water temperature, concentration of precursors, pH, and chlorine contact time. THM have been found to cause cancer in laboratory animals and are suspected to be human carcinogens. The City's most recent Edward Springs samples for THM and HAA5 in 2013, 2010, and 2007 revealed concentrations lower than their MCLs. The City's most recent Stillaguamish River samples for THM and HAA5 in 2010 revealed concentrations lower than their MCLs. The City's most recent Lake Goodwin Well samples for THM and HAA5 in 2012 and 2010 revealed concentrations lower than their MCLs. Therefore, the City is in compliance with this regulation.

In response to the Stage 1 and Stage 2 D/DBPR, the City expanded its distribution system monitoring to include THM and HAA5. The City also completed an IDSE standard monitoring plan, which was submitted to the EPA for compliance. The IDSE standard monitoring plan is included in **Appendix O**.

Lead and Copper Monitoring

The Lead and Copper Rule identifies the action level for lead as being greater than 0.015 mg/L, and the action level for copper as being greater than 1.3 mg/L. The results of the tests from 2015, which included 30 sample sites, indicated a range of less than 0.001 mg/L to 0.006 mg/L for lead and a range of less than 0.02 mg/L to 1.125 mg/L for copper. These results have all been satisfactory, since the 90th percentile concentration of either lead or copper from each group of samples has not exceeded the action levels.

Asbestos

Asbestos monitoring is required if the sources are vulnerable to asbestos contamination or if the distribution system contains more than 10 percent of asbestos cement (AC) pipe. None of the City's sources are susceptible to asbestos contamination, and AC pipe comprises approximately 2.5 percent of the City's distribution system. However, the City does monitor for asbestos in the distribution system. The current MCL for asbestos is 7 million fibers per liter and greater than 10 microns in length. Monitoring must be accomplished during the first 3-year compliance period of each 9-year compliance cycle. The water sample must be taken at a tap that is served by an asbestos cement pipe under conditions where asbestos contamination is most likely to occur. The City's most recent sample in 2009 identified asbestos at 0.136 million fibers per liter.

7 | WATER SYSTEM ANALYSIS

INTRODUCTION

This chapter presents the analysis of the City's existing water system. Individual water system components were analyzed to determine their ability to meet policies and design criteria under existing and future water demand conditions. The policies and design criteria are presented in **Chapter 5**, and the water demands are presented in **Chapter 4**. A description of the water system facilities and current operation is presented in **Chapter 2**. The last section of this chapter presents the existing system capacity analysis that was performed to determine the maximum number of equivalent residential units (ERUs) that can be served by the City's existing water system.

PRESSURE ZONES

The ideal static pressure of water supplied to customers is between 40 and 80 pounds per square inch (psi). Pressures within a water distribution system are commonly as high as 120 psi, requiring pressure regulators on individual service lines to reduce the pressure to 80 psi or less. It is difficult for the City's water system (and most others) to maintain distribution pressures between 40 and 80 psi, primarily due to the topography of the water service area.

Table 7-1 lists each of the City's eleven pressure zones (the north and south sections of the 240 Zone and 360 Zone are evaluated separately), the highest and lowest elevation served in each zone, and the minimum and maximum distribution system pressures within each zone based on maximum static water conditions (full reservoirs with no demand). While this table presents the results of the pressure evaluations based on the adequacy of the pressure zones under static conditions, the hydraulic analysis section later in this chapter presents the results of the pressure evaluations based on the adequacy of the water mains under dynamic conditions.

Table 7-1
Minimum and Maximum Distribution System Static Pressures

Pressure Zone	Highest Elevation Served		Lowest Elevation Served	
	Elevation (feet)	Static Pressure (psi)	Elevation (feet)	Static Pressure (psi)
Existing System				
170 Zone	83	38	5	71
203 Zone	51	66	40	70
North 240 Zone	185	24	22	94
South 240 Zone	172	29	33	90
260 Zone	144	50	81	78
285 Zone	214	31	21	114
327 Zone	251	33	140	81
North 360 Zone	280	35	76	123
South 360 Zone	292	30	104	111
415 Zone	302	49	72	149
440 Zone	268	75	158	122
460 Zone	377	36	243	94
510 Zone	440	30	213	129
Proposed (2036) System				
170 Zone	83	38	5	71
203 Zone	51	66	40	70
North 240 Zone	156	37	22	94
South 240 Zone	165	33	33	90
260 Zone	144	50	81	78
285 Zone	184	44	21	114
327 Zone	251	33	125	88
North 360 Zone	280	35	76	123
South 360 Zone	265	41	72	125
415 Zone	302	49	152	114
440 Zone	268	75	179	113
460 Zone	377	36	243	94
510 Zone	410	43	227	123
560 Zone	440	52	352	90

The City is currently providing water at pressures of at least 40 psi to services in each zone except for the 170, 240, 285, 327, 360, 440, 460, and 510 Zones, as shown in **Table 7-1**. The lower pressures in the 240 Zone occur along 67th Avenue NE between 132nd Street NE and Wade Road; near the intersection of State Route (SR) 531 and 11th Avenue NE; near the intersection of

64th Street NE and 69th Drive NE; near the intersection of Grove Street and 73rd Avenue NE; near the intersection of 71st Street NE and 71st Avenue NE; and near the intersection of 52nd Street NE and 67th Avenue NE. The lower pressures in the 285 Zone occur near the intersection of 40th Street NE and 68th Drive NE. The lower pressures in the 327 Zone occur near the intersection of the Forty Five Road and 3rd Avenue NW. The lower pressures in the 360 Zone occur near the intersection of 52nd Street NE and 73rd Avenue NE; near the intersection of 98th Street NE and 79th Drive NE; near the intersection of 84th Street NE and 76th Avenue NE; and near the intersection of 87th Place NE and Ingraham Boulevard. The low pressures in the 460 Zone occur near the intersection of 176th Street NW and Lakewood Road. The low pressures in the 510 Zone occur near the intersection of 64th Street NE and SR 9; near the intersection of 75th Street NE and 83rd Avenue NE; and to the east of 83rd Avenue NE between 75th Street NE and 64th Street NE. The low pressures will be resolved by transferring the areas to higher pressure zones through pressure zone conversion projects described in **Chapter 9**.

Pressures over 120 psi occur in the 360, 415, 440, and 510 Zones. The high pressures in the 360 Zone occur along 100th Street NE from 67th Avenue NE to 76th Avenue NE. The high pressures in the 415 Zone occur near the intersection of Sunnyside Boulevard, Soper Hill Road, and 71st Avenue NE; and near the intersection of 52nd Street NE and 67th Avenue NE. The high pressures in the 440 Zone occur near the intersection of 70th Street NE and 73rd Drive NE. The high pressures in the 510 Zone occur near the intersection of 73rd Avenue NE and 59th Street NE; near the intersection of 81st Place NE and 74th Drive NE; near the intersection of 59th Place NE and 74th Avenue NE; and near the intersection of 76th Avenue NE and 83rd Place NE. Most of these high pressures will be resolved by transferring the areas to lower pressure zones through pressure zone conversion projects described in **Chapter 9**.

The proposed (2036) system static pressures are shown in **Table 7-1**. These static pressures assume that the pressure zone improvement projects described in **Chapter 9** are completed, and that services located on or near the boundary of two pressure zones are connected to the pressure zone that provides more suitable pressures.

SOURCE CAPACITY EVALUATION

This section evaluates the combined capability of the City's existing sources to determine if they have sufficient capacity to meet the overall demands of the water service area based on existing and future water demands. The section that follows will address the evaluation of the individual facilities to determine if they have sufficient capacity to meet the existing and future demands of the individual zone, or zones, that they supply.

ANALYSIS CRITERIA

Supply facilities must be capable of adequately and reliably supplying high-quality water to the system. In addition, supply facilities must provide a sufficient quantity of water at pressures that meet the requirements of Washington Administrative Code (WAC) 246-290-230. The evaluation of the combined capacity of the sources in this section is based on the criteria that they provide supply to the system at a rate that is equal to or greater than the maximum day demand (MDD) of the system.

SOURCE CAPACITY ANALYSIS RESULTS

The combined capability of the City's active sources to meet both existing and future demand requirements, based on existing pumping capacities of the individual supply facilities, is presented in **Table 7-2**. The demands used in the evaluation for 2022, 2026, and 2036 are future demand projections without reductions from water use efficiency efforts, as shown in **Table 4-12** of **Chapter 4**. Therefore, if additional reductions in water use are achieved through water use efficiency efforts, the total source capacity required in the future will be less than that shown in **Table 7-2**.

Table 7-2
Water Source Capacity Evaluation

Description	Existing 2015	Future Projections 2022 (+ 6 years)	2026 (+ 10 years)	2036 (+ 20 years)
Required Supply (gpm)				
System-wide Maximum Day Demand	9,904	11,056	11,775	13,785
Snohomish PUD Demand[1]	(785)	(1,034)	(1,181)	(1,573)
Total Required Supply	9,119	10,022	10,594	12,212
Available Supply (gpm)				
Edward Springs Spring Source	760	760	760	760
Edward Springs Well No. 1R	200	200	200	200
Edward Springs Well No. 2	225	225	225	225
Edward Springs Well No. 3	300	300	300	300
Stillaguamish River WTP BPS	2,200	2,200	2,200	2,200
Lake Goodwin Well	350	350	350	350
JOA Supply Line	9,132	9,132	9,132	9,132
JOA Supply Line - Transfer to Tulalip	1,130	1,149	1,168	1,235
Sunnyside Well No. 1R	-	1,000	1,000	1,000
Sunnyside Well No. 2	-	1,000	1,000	1,000
Total Available Supply	14,297	16,316	16,335	16,402
Surplus or Deficient Supply (gpm)				
Surplus or Deficient Amount	5,178	6,294	5,741	4,190

NOTES:
1. The Snohomish PUD is served directly from the JOA Supply Line.

The results of the analysis indicate that the City has approximately 5,278 gallons per minute (gpm) of surplus source capacity to meet existing demands. With Sunnyside Well Nos. 1R and 2 online as shown in **Table 7-2**, the City's sources are sufficient to meet the projected demands of the system until at least 2036. **Chart 7-1** shows the relationship between future projected supply and demands. The projected supply assumes that the Sunnyside Well Treatment Facility is online at a rate of 2,000 gpm by 2018. The facility is currently under construction.

Chart 7-1
Future Water Supply and Demand Projections

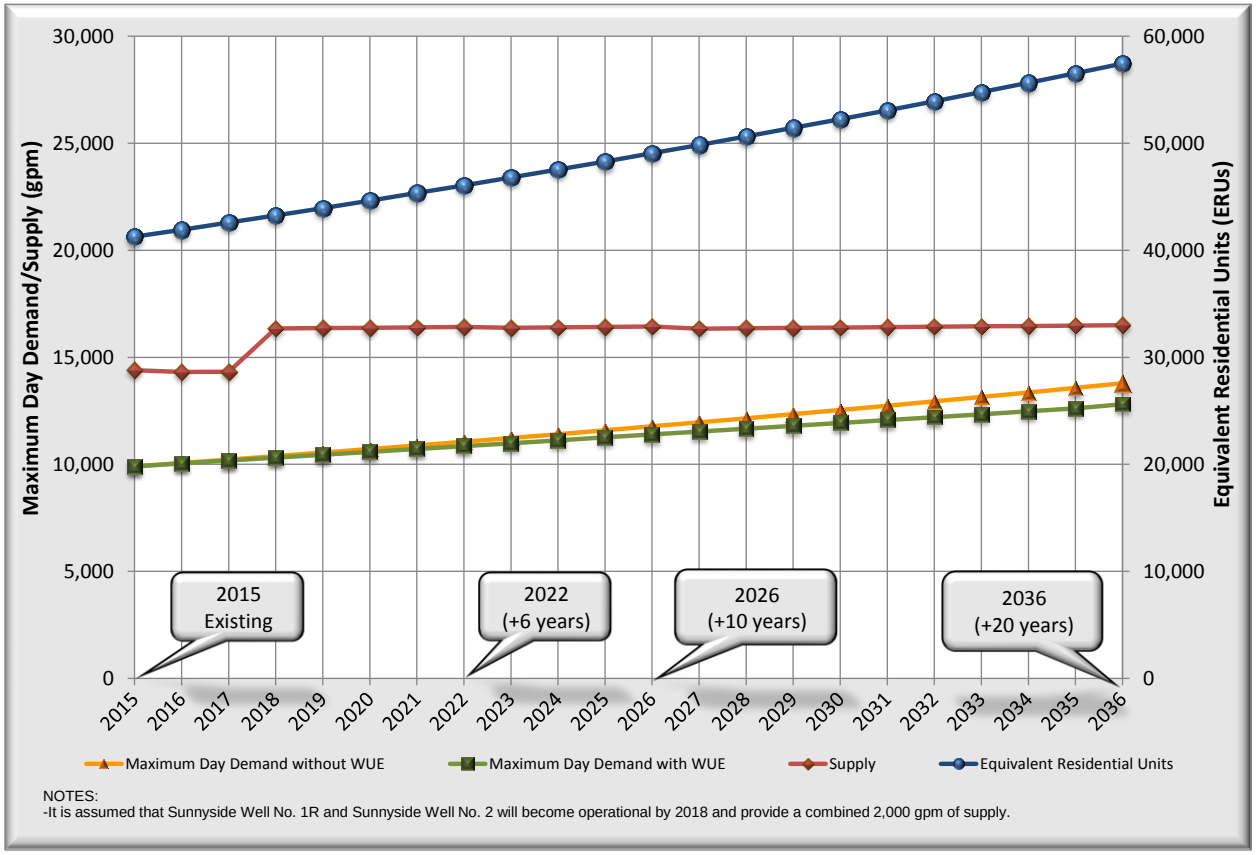

WATER SUPPLY FACILITIES EVALUATION

This section evaluates the existing supply facilities to determine if they have sufficient capacity to provide water supply at a rate that meets the existing and future demands of each of the zones that they supply. **Figures 2-1** and **2-2** in **Chapter 2** display the pressure zones described within this section. This section also identifies deficiencies that are not related to the capacity of the supply facilities.

ANALYSIS CRITERIA

The evaluation to determine if supply facilities have adequate capacity is based on one of two criteria, as follows: 1) if the pressure zone that the facility provides supply into has water storage, then the amount of supply required is equal to the MDD of the zone; or 2) if the pressure zone that the facility provides supply into does not have water storage, then the amount of supply required is equal to the peak hour demand (PHD) of the zone. The higher supply requirement of the latter criteria is compensating for the lack of equalizing storage that is typically utilized to provide short-term supply during times of peak system demands.

SUPPLY ANALYSIS RESULTS

The system was divided into four operating areas to perform the supply analysis. Operating Area A comprises the north end of the system (460 Zone, 327 Zone, the northern part of the 240 Zone, and the 203 Zone). Operating Area B comprises the central part of the southern area of the system (440 Zone, 360 Zone, 260 Zone, and the southern part of the 240 Zone). Operating Area C comprises the southwest corner of the system (170 Zone); and Operating Area D comprises the far south and east corners of the system (510 Zone, 415 Zone, and 285 Zone).

Operating Area A Facilities

The Edward Springs spring source and wells, as well as the Stillaguamish River water treatment plant (WTP) booster pump station (BPS), provide water directly to the portion of the 240 Zone located in Operating Area A. Additionally, the Lake Goodwin Well supplies water directly to the 460 Zone. Water is also supplied to the Operating Area A portion of the 240 Zone from Operating Area B pressure reducing valves (PRVs). Water is transferred from Operating Area A to Operating Area C (170 Zone) through several PRVs as necessary to supplement supply in the operating area. **Table 7-3** summarizes the current and future supply requirements of Operating Area A based on existing and projected water demands for the operating area. **Table 7-3** also summarizes the amount of water supply available to Operating Area A. The results of the analyses indicate that the existing and proposed configurations and capacities of the Operating Area A facilities are sufficient to meet both existing and future demands.

Table 7-3
Operating Area A Supply Evaluation

Description	Existing 2015	Future Projections 2022 (+ 6 years)	2026 (+ 10 years)	2036 (+ 20 years)
Required Supply (gpm)				
Operating Area A Maximum Day Demand[1]	4,548	5,018	5,314	6,143
Transfer to Operating Area C	2,336	2,414	2,473	2,631
Total Required Supply	6,883	7,432	7,786	8,774
Available Supply (gpm)				
Edward Springs Spring Source	760	760	760	760
Edward Springs Well No. 1R	200	200	200	200
Edward Springs Well No. 2	225	225	225	225
Edward Springs Well No. 3	300	300	300	300
Stillaguamish River WTP BPS	2,200	2,200	2,200	2,200
Lake Goodwin Well	350	350	350	350
Transfer from Operating Area B PRVs	2,848	3,397	3,751	4,739
Total Available Supply	6,883	7,432	7,786	8,774
Surplus or Deficient Supply (gpm)				
Surplus or Deficient Amount	0	0	0	0

NOTES:
1. Includes 460 Zone, 327 Zone, North 240 Zone, and 203 Zone.

Operating Area B Facilities

Water supply to Operating Area B is currently provided by the JOA Supply Line (Everett Intertie). It is expected that the Sunnyside Well Treatment Facility will be online by 2018 and will provide an additional 2,000 gpm of supply from the City's Sunnyside Well No. 1R and Sunnyside Well No. 2. Water is transferred from Operating Area B to Operating Areas A and C through PRVs as necessary to supplement supply in the operating areas. It is anticipated that water will be transferred to Operating Area D by 2022 via the proposed Sunnyside 510 Zone BPS improvements described in **Chapter 9**. **Table 7-4** summarizes the current and future supply requirements of Operating Area B based on existing and projected water demands for the operating area. **Table 7-4** also summarizes the amount of water supply available to Operating Area B. The results of the analyses indicate that the existing and proposed configurations and capacities of the Operating Area B facilities are sufficient to meet both existing and future demands.

Table 7-4
Operating Area B Supply Evaluation

Description	Existing 2015	Future Projections 2022 (+ 6 years)	2026 (+ 10 years)	2036 (+ 20 years)
Required Supply (gpm)				
Operating Area B Maximum Day Demand[1]	1,052	1,099	1,142	1,255
Transfer to Operating Area A	2,848	3,397	3,751	4,739
Transfer to Operating Area C	2,336	2,414	2,473	2,631
Transfer to Operating Area D	0	2,400	2,400	2,400
Total Required Supply	6,236	9,310	9,765	11,025
Available Supply (gpm)				
JOA Supply Line	9,132	9,132	9,132	9,132
Sunnyside Well No. 1R	-	1,000	1,000	1,000
Sunnyside Well No. 2	-	1,000	1,000	1,000
Total Available Supply	9,132	11,132	11,132	11,132
Surplus or Deficient Supply (gpm)				
Surplus or Deficient Amount	2,896	1,822	1,367	107

NOTES:
1. Includes 440 Zone, North 360 Zone, South 360 Zone, 260 Zone, and South 240 Zone.

Operating Area C Facilities

Water supply to Operating Area C is currently provided by PRVs from Operating Areas A and B as necessary to provide supply to the operating area. Water is transferred from Operating Area C to Operating Area D via the Cedarcrest BPS. **Table 7-5** summarizes the current and future supply requirements of Operating Area C based on existing and projected water demands for the operating area. **Table 7-5** also summarizes the current and future amount of water supply available to Operating Area C. The results of the analyses indicate that the existing and proposed configurations are of sufficient capacity to meet both existing and future demands.

Table 7-5
Operating Area C Supply Evaluation

Description	Existing 2015	Future Projections 2022 (+ 6 years)	2026 (+ 10 years)	2036 (+ 20 years)
Required Supply (gpm)				
Operating Area C Maximum Day Demand[1]	2,272	2,427	2,545	2,863
Transfer to Operating Area D	2,400	2,400	2,400	2,400
Total Required Supply	4,672	4,827	4,945	5,263
Available Supply (gpm)				
Transfer from Operating Area A PRVs[2]	2,336	2,414	2,473	2,631
Transfer from Operating Area B PRVs[3]	2,336	2,414	2,473	2,631
Total Available Supply	4,672	4,827	4,945	5,263
Surplus or Deficient Supply (gpm)				
Surplus or Deficient Amount	0	0	0	0

NOTES:
1. Includes 170 Zone.
2. It is assumed that 50% of Operating Area C's supply is provided from Operating Area A.
3. It is assumed that 50% of Operating Area C's supply is provided from Operating Area B.

Operating Area D Facilities

Water supply to Operating Area D is currently provided by the Cedarcrest BPS, which pumps from the 170 Zone in Operating Area C. The proposed Sunnyside 510 Zone BPS is expected to provide water to Operating Area D from Operating Area B by 2022, as described in **Chapter 9**. The proposed Sunnyside 510 Zone BPS will provide supply redundancy to the operating area. **Table 7-6** summarizes the current and future supply requirements of Operating Area D based on existing and projected water demands for the operating area. **Table 7-6** also summarizes the current and future amount of water supply available to Operating Area D. The results of the analyses indicate that the existing and proposed configurations are of sufficient capacity to meet both existing and future demands.

Table 7-6
Operating Area D Supply Evaluation

Description	Existing 2015	Future Projections 2022 (+ 6 years)	2026 (+ 10 years)	2036 (+ 20 years)
Required Supply (gpm)				
Operating Area D Maximum Day Demand[1]	1,247	1,478	1,593	1,952
Total Required Supply	1,247	1,478	1,593	1,952
Available Supply (gpm)[1]				
Transfer from Operating Area C (Cedarcrest BPS)	2,400	2,400	2,400	2,400
Proposed Sunnyside 510 Zone BPS	0	2,400	2,400	2,400
Total Available Supply	2,400	4,800	4,800	4,800
Surplus or Deficient Supply (gpm)				
Surplus or Deficient Amount	1,153	3,322	3,207	2,848

NOTES:
1. Includes 510, 415, and 285 Zones.

FACILITY DEFICIENCIES

It is anticipated that the Edward Springs sources will require arsenic treatment in the future to address increasing standards for arsenic in drinking water. Implementation of arsenic treatment at Edward Springs is included in **Chapter 9**. Discolored water is occasionally produced by the Edward Springs sources. The cause of this discolored water and recommended solutions will also be evaluated at the time of the arsenic treatment evaluation.

Additionally, it is anticipated that implementation of manganese treatment at the Lake Goodwin Well will be required in the next 10 years. A proposed manganese treatment facility for the Lake Goodwin Well is identified in **Chapter 9**.

Operating Area D lacks redundancy, as the Cedarcrest BPS is the only facility that can supply the 510, 415, and 285 Zones. If the BPS was out of service, these zones would not have water supply. Improvements to provide redundancy in Operating Area D by constructing additional facilities to supply the operating area are described in **Chapter 9**.

The Highway 9 Well has been offline since 1984 due to concerns of high levels of iron, arsenic, and manganese, as well as potential influence to the water levels in nearby private wells. Iron and manganese are secondary contaminants that could stain fixtures and laundry and may lead to aesthetic customer complaints if not mitigated. A positive bacteriological sample was also collected recently from the well that triggered a requirement to provide a minimum CT of 6.

Some of the City's sources are not currently capable of supplying their full water right amount due to water quality or other limitations of the source. Evaluations of the Edward Springs source, the Lake Goodwin Well and the Highway 9 Well should consider improvements to increase the capacity of the sources to the full water right amount.

STORAGE FACILITIES

This section evaluates the City's existing water storage tanks to determine if they have sufficient capacity to meet the existing and future storage requirements of the system. This section also identifies facility deficiencies that are not related to the capacity of the water tanks.

ANALYSIS CRITERIA

Water storage is typically made up of the following components: operational storage; equalizing storage; standby storage; fire flow storage; and dead storage. Each storage component serves a different purpose and will vary from system to system. A definition of each storage component and the criteria used to evaluate the capacity of the City's storage tanks is provided below.

Operational Storage – Volume of the reservoir used to supply the water system under normal conditions when the source or sources of supply are not delivering water to the system (i.e., sources are in the off mode). Operational storage is essentially the average amount of drawdown in the reservoir during normal operating conditions, which represents a volume of storage that will most likely not be available for equalizing storage, fire flow storage, or standby storage. The operational storage is based on the amount of storage between the fill, or pump starting set point level, and the overflow elevation of the tank.

Equalizing Storage – Volume of the reservoir used to supply the water system under peak demand conditions when the system demand exceeds the total rate of supply of the sources. The Washington State Department of Health (DOH) requires that equalizing storage be stored above an elevation that will provide a minimum pressure of 30 psi at all service connections throughout the system under PHD conditions. Because the City's supply sources primarily operate on a "call on demand" basis to fill the reservoirs, the equalizing storage requirements are determined using the standard DOH formula that considers the difference between the system PHD and the combined capacity of the supply sources.

$$\mathbf{ES = (PHD - Q_S)(150\ minutes)}\text{, but in no case less than zero}$$

Where:

ES = Equalizing Storage, in gallons

PHD = Peak Hour Demand, in gpm

Q_S = Sum of all installed and active sources, except emergency supply, in gpm.

The capacities of the sources that supply each zone are sufficient to meet the peak hour demands of their zones. Therefore, the equalizing storage requirement for each supply area is zero.

Standby Storage – Volume of the reservoir used to supply the water system under emergency conditions when supply facilities are out of service due to equipment failures, power outages, loss of supply, transmission main breaks, and any other situation that disrupts the supply source. DOH requires that standby storage be stored above an elevation that will provide a minimum pressure of 20 psi at all service connections throughout the system. The criteria for determining the standby storage requirements for the City's system, which has multiple supply sources, is based on the standard DOH formula that requires average day demand and supply source capacity data. The

amount required is sufficient to supply the system for a 48-hour period when the primary supply facility is out of service and the system is experiencing average day demands.

$$\mathbf{SB = (2\ days)[(ADD)(N) - t_m\ (Q_S\text{-}Q_L)]}$$

Where:

SB = Standby Storage, in gallons

ADD = Average Day Demand per ERU, in gallons per day (gpd) per ERU

N = Number of ERUs

Q_S = Sum of all installed and continuously available sources, except emergency supply, in gpm

Q_L = The capacity of the largest source available to the system, in gpm

t_m = Time the remaining sources are pumped on the day when the largest source is not available, in minutes. Unless otherwise restricted, this value is 1,440 minutes.

The standby storage analysis was completed for each operating area. For Operating Area A, the largest capacity source assumed to be out of service was the Stillaguamish WTP BPS for the existing system analysis; for 2022 and beyond, the largest capacity source assumed to be out of service was the PRVs transferring water from Operating Area B. For the Operating Area B analysis, the JOA Supply Line (Everett Intertie) was assumed to be out of service. For the Operating Area C analysis, the PRVs transferring water from Operating Area A were assumed to be out of service, and for the Operating Area D analysis, the Cedarcrest BPS was assumed to be out of service.

DOH recommends that the minimum standby storage volume be no less than 200 gallons per ERU. This calculation determined the standby storage volume required for Operating Area A and Operating Area C.

Fire Flow Storage – Volume of the reservoir used to supply water to the system at the maximum rate and duration required to extinguish a fire at the building with the highest fire flow requirement. The magnitude of the fire flow storage is the product of the fire flow rate and duration of the system's maximum fire flow requirement established by the local fire authority, the City of Marysville Fire Department. DOH requires that fire flow storage be stored above an elevation that will provide a minimum pressure of 20 psi at all points throughout the distribution system under MDD conditions.

The fire flow storage requirements shown in the analyses that follow are based on the maximum fire flow requirements in each operating area. The maximum fire flow requirement in Operating Area A is 4,000 gpm for a 4-hour duration, which is equivalent to 960,000 gallons. The maximum fire flow requirement in Operating Area B is 3,500 gpm for a 3-hour duration, which is equivalent to 630,000 gallons. The maximum fire flow requirement in Operating Area C is 5,750 gpm for a 4-hour duration, but this is not factored into the storage calculations because this fire flow can be provided from Operating Areas A and B. The maximum fire flow requirement in Operating Area D is 2,500 gpm for a 2-hour duration, which is equivalent to 300,000 gallons.

Dead Storage – Volume of the reservoir that cannot be used because it is stored at an elevation that does not provide system pressures that meet the minimum pressure requirements established by DOH without pumping. This unusable storage occupies the lower portion of most ground-level

reservoirs. Water that is stored below an elevation that cannot provide a minimum pressure of 20 psi is considered dead storage for the analyses that follow.

STORAGE ANALYSIS RESULTS

The storage analyses are based on an evaluation of the existing storage facilities providing water to four operating areas: A, B, C, and D.

Existing Storage Analysis

As shown in **Table 7-7**, the maximum combined storage capacity of the City's reservoirs is 24.26 million gallons (MG). The total amount of usable storage for operational, equalizing, standby, and fire flow purposes is reduced due to the dead storage (i.e., non-usable storage) in Operating Areas A, B, and D. The dead storage is due to water services that are located at the higher elevations in their respective pressure zones.

Table 7-7
Existing Storage Evaluation

Description	Supply Area				Totals
	Operating Area A[1]	Operating Area B[2]	Operating Area C[3]	Operating Area D[4]	
Available/Usable Storage (MG)					
Maximum Storage Capacity	10.01	9.21	3.21	1.83	24.26
Dead (Non-usable Storage)	-4.32	-2.00	0.00	-1.03	-7.36
Total Available Storage	5.69	7.20	3.21	0.80	16.90
Required Storage (MG)					
Operational Storage	0.89	1.55	0.64	0.18	3.26
Equalizing Storage	0.00	0.00	0.00	0.00	0.00
Standby Storage	3.79	1.42	1.89	1.68	8.78
Fire Flow Storage	0.96	0.63	0.00	0.30	1.89
Totals	5.64	3.60	2.53	2.16	13.93
Surplus or Deficient Storage (MG)					
Surplus or Deficient Amount	0.04	3.61	0.68	-1.36	2.97

NOTES:
1 = Operating Area A includes the 460 Zone, 327 Zone, North 240 Zone, and 203 Zone.
2 = Operating Area B includes the 440 Zone, North 360 Zone, South 360 Zone, 260 Zone, and South 240 Zone.
3 = Operating Area C includes the 170 Zone.
4 = Operating Area D includes the 510, 415, and 285 Zones.

The results of the existing storage evaluation, as shown in **Table 7-7**, indicate that the system has a slight storage deficiency in Operating Area A, surplus storage in Operating Area B and Operating

Area C, and a storage deficiency in Operating Area D. This combines for a net surplus of approximately 2.92 MG.

FUTURE STORAGE ANALYSIS

The system's future storage requirements were computed for the 6-, 10-, and 20-year planning periods, based on year 2022, 2026, and 2036 demand projections as shown in **Tables 7-8A**, **7-8B**, and **7-8C**. The analyses were performed to determine the adequacy of the City's storage facilities to meet future storage requirements for each storage supply area, assuming the improvement projects described in **Chapter 9** have been completed according to the capital improvement schedule also presented in **Chapter 9**. The future analyses for the 2022 system assumes that the Lake Goodwin Standpipe will be replaced, the Sunnyside Wells have been brought online, a redundant pump station to the Cedarcrest BPS has been installed, and the amount of dead storage is reduced with the completion of pressure zone improvements and the creation of a new 560 Zone. The future analyses for the 2026 system assumes that the proposed 1.0 MG Soper Hill 415 Zone Reservoir will be constructed. The future analyses for the 2036 system assumes that the amount of dead storage is further reduced due to the expansion of the new 560 Zone.

Table 7-8A
Year 2022 Future Storage Projections

Description	2022 Supply Area				
	Operating Area A[1]	Operating Area B[2]	Operating Area C[3]	Operating Area D[4]	Totals
Available/Usable Storage (MG)					
Maximum Storage Capacity	10.01	9.21	3.21	1.83	24.26
Dead (Non-usable Storage)	-0.04	-0.76	0.00	-0.68	-1.49
Total Available Storage	9.96	8.45	3.21	1.14	22.77
Required Storage (MG)					
Operational Storage	0.89	1.55	0.64	0.18	3.26
Equalizing Storage	0.00	0.00	0.00	0.00	0.00
Standby Storage	4.18	0.92	2.02	1.23	8.35
Fire Flow Storage	0.96	0.63	0.00	0.30	1.89
Totals	6.04	3.09	2.66	1.71	13.50
Surplus or Deficient Storage (MG)					
Surplus or Deficient Amount	3.93	5.36	0.55	-0.57	9.27

NOTES:
1 = Operating Area A includes the 460 Zone, 327 Zone, North 240 Zone, and 203 Zone.
2 = Operating Area B includes the 440 Zone, North 360 Zone, South 360 Zone, 260 Zone, and South 240 Zone.
3 = Operating Area C includes the 170 Zone.
4 = Operating Area D includes the 510, 415, and 285 Zones.

Table 7-8B
Year 2026 Future Storage Projections

Description	2026 Supply Area				
	Operating Area A[1]	Operating Area B[2]	Operating Area C[3]	Operating Area D[4]	Totals
Available/Usable Storage (MG)					
Maximum Storage Capacity	10.01	9.21	3.21	2.83	25.26
Dead (Non-usable Storage)	-0.04	-0.76	0.00	-0.68	-1.49
Total Available Storage	9.96	8.45	3.21	2.14	23.77
Required Storage (MG)					
Operational Storage	0.89	1.55	0.64	0.18	3.26
Equalizing Storage	0.00	0.00	0.00	0.00	0.00
Standby Storage	4.43	0.95	2.12	1.33	8.83
Fire Flow Storage	0.96	0.63	0.00	0.30	1.89
Totals	6.28	3.13	2.76	1.81	13.98
Surplus or Deficient Storage (MG)					
Surplus or Deficient Amount	3.68	5.32	0.46	0.34	9.80

NOTES:
1 = Operating Area A includes the 460 Zone, 327 Zone, North 240 Zone, and 203 Zone.
2 = Operating Area B includes the 440 Zone, North 360 Zone, South 360 Zone, 260 Zone, and South 240 Zone.
3 = Operating Area C includes the 170 Zone.
4 = Operating Area D includes the 510, 415, and 285 Zones.

Table 7-8C
Year 2036 Future Storage Projections

Description	2036 Supply Area				
	Operating Area A[1]	Operating Area B[2]	Operating Area C[3]	Operating Area D[4]	Totals
Available/Usable Storage (MG)					
Maximum Storage Capacity	10.01	9.21	3.21	2.83	25.26
Dead (Non-usable Storage)	-0.04	-0.76	0.00	0.00	-0.80
Total Available Storage	9.96	8.45	3.21	2.83	24.46
Required Storage (MG)					
Operational Storage	0.89	1.55	0.64	0.32	3.40
Equalizing Storage	0.00	0.00	0.00	0.00	0.00
Standby Storage	5.12	1.05	2.39	1.63	10.18
Fire Flow Storage	0.96	0.63	0.00	0.30	1.89
Totals	6.97	3.22	3.02	2.25	15.47
Surplus or Deficient Storage (MG)					
Surplus or Deficient Amount	2.99	5.23	0.19	0.58	8.99

NOTES:
1 = Operating Area A includes the 460 Zone, 327 Zone, North 240 Zone, and 203 Zone.
2 = Operating Area B includes the 440 Zone, North 360 Zone, South 360 Zone, 260 Zone, and South 240 Zone.
3 = Operating Area C includes the 170 Zone.
4 = Operating Area D includes the 510, 415, and 285 Zones.

FACILITY DEFICIENCIES

The Lake Goodwin Standpipe is aging, in poor structural condition, and in need of replacement. Additionally, the limited capacity of the standpipe requires excessive pump cycling of the Lake Goodwin Well. A replacement of the standpipe is identified in **Chapter 9**.

Recently, divers have inspected several of the City's reservoirs and found corrosion issues. Cathodic protection should be implemented on these reservoirs to reduce the rate of corrosion. Implementation of cathodic protection is included in **Chapter 9**.

In order to resolve the storage deficiency in Operating Area D, a new 415 Zone Reservoir will be constructed in the Soper Hill area. The City has already purchased a site for this reservoir. Construction of the 1.0 MG Soper Hill 415 Zone Reservoir is described in **Chapter 9**.

As development continues in the future water service area (north of the Getchell Reservoir), the 360 Zone and 510 Zone will be expanded northward to provide water service. As the number of customers in the 510 Zone increases, additional 510 Zone storage will need to be constructed, likely in the vicinity of the existing Getchell Reservoir.

DISTRIBUTION AND TRANSMISSION SYSTEM

This section evaluates the City's existing distribution and transmission system (i.e., water mains) to determine if they are adequately sized and looped to provide the necessary flow rates and pressures to meet the existing and future requirements of the system. This section also identifies deficiencies that are not related to the capacity of the water mains.

ANALYSIS CRITERIA

Distribution and transmission mains must be capable of adequately and reliably conveying water throughout the system at acceptable flow rates and pressures. The criteria used to evaluate the City's distribution and transmission system are the state mandated requirements for Group A water systems contained in WAC 246-290-230 – Distribution Systems. The pressure analysis criteria state that the distribution system "…shall be designed with the capacity to deliver the design PHD quantity of water at 30 psi under PHD flow conditions measured at all existing and proposed service water meters." It also states that if fire flow is to be provided, "… the distribution system shall also provide MDD plus the required fire flow at a pressure of at least 20 psi at all points throughout the distribution system."

Hydraulic analyses of the existing system were performed under existing PHD conditions to evaluate its current pressure capabilities and identify existing system deficiencies. The existing system was also analyzed under existing MDD conditions to evaluate the current fire flow capabilities and identify additional existing system deficiencies. Additional hydraulic analyses were then performed with the same hydraulic model under future PHD and MDD conditions and with the proposed improvements to demonstrate that the identified improvements will eliminate the deficiencies and meet the requirements far into the future. The following is a description of the hydraulic model, the operational conditions, and facility settings used in the analyses.

HYDRAULIC MODEL

Description

A computer-based hydraulic model of the existing water system was updated to version 8i of the WaterGEMS® program (developed by Bentley Systems, Inc.) with the City's most recent GIS shapefile, to reflect the best known information on distribution system geometry and pipe characteristics, including diameter, material, and installation year. The Sunnyside-Whiskey Ridge annexation area that the City began serving in 2014 was exported from the PUD's hydraulic model and imported into the City's base hydraulic model.

Hydraulic model pipe roughness coefficients were initialized with computed estimates based on the water main material and age information from the City's water main GIS shapefile. Based on the premise that the internal surface of water mains become rougher as they get older, older water mains were assigned higher roughness coefficients than newer water mains. The junction node elevation data were updated using City-provided 5-foot contour data. A hydraulic model node diagram, providing a graphical representation of the model of the water system, is contained in **Appendix P**.

Demand Data

The hydraulic model of the existing system contains demands based on 2013 and 2014 individual customer meter water demand data provided by the City. Demand data for each parcel was distributed to the closest representative junction node of the model based on the recorded usage. The peaking factors shown in **Chapter 4** were used to analyze the system under PHD and MDD conditions.

The hydraulic model of the proposed system contains 6-year demand levels that are projected for the year 2022, 10-year demand levels that are projected for the year 2026, and 20-year demand levels that are projected for the year 2036. The future demand distribution is based on neighborhood planning area population estimates from the Land Use Element of the City's *Comprehensive Plan*.

Facilities

The hydraulic model of the existing system contained all active existing system facilities. For the proposed system analyses in the years 2022, 2026, and 2036, the hydraulic model contained all active existing system facilities and proposed system improvements identified in **Chapter 9** for the 6-year, 10-year, and 20-year planning periods, respectively.

The facility settings for the pressure analyses corresponded to a PHD event in the water system. All sources of supply that are currently available to the system, or will be available in the future for the years 2022, 2026, and 2036 analyses, during a peak period were operating at their normal summertime pumping rates. The reservoir levels were modeled to reflect full utilization of operational and equalizing storage. The operational conditions for the pressure analyses are summarized in **Table 7-9**.

Table 7-9
Hydraulic Analyses Operational Conditions

Description	PHD Pressure Analysis				Fire Flow Analysis			
	2015	2022	2026	2036	2015	2022	2026	2036
Demand	2015 PHD	2022 PHD	2026 PHD	2036 PHD	2015 MDD	2022 MDD	2026 MDD	2036 MDD
Cedarcrest Reservoir HGL (ft)	165.7	165.7	165.7	165.7	165.7	165.7	165.7	165.7
Edward Springs Reservoir HGL (ft)	238.8	238.8	238.8	238.8	236.5	236.5	236.5	236.5
Wade Road Reservoir HGL (ft)	234.0	234.0	234.0	234.0	234.0	234.0	234.0	234.0
Stillaguamish WTP Clearwell HGL (ft)	145.0	145.0	145.0	145.0	145.0	145.0	145.0	145.0
327 Reservoir HGL (ft)	322.0	322.0	322.0	322.0	319.7	319.7	319.7	319.7
Getchell Reservoir HGL (ft)	353.0	353.0	353.0	353.0	349.8	349.8	349.8	349.8
Sunnyside Reservoir HGL (ft)	356.0	356.0	356.0	356.0	342.5	342.5	342.5	342.5
Lake Goodwin Standpipe HGL (ft)	440.0	440.0	440.0	440.0	440.0	440.0	440.0	440.0
Highway 9 Reservoir HGL (ft)	504.9	504.9	504.9	504.9	496.3	496.3	496.3	496.3
Proposed 415 Zone Reservoir HGL (ft)	-	-	-	410.0	-	-	-	410.0
Edward Springs Spring Source Supply Rate (gpm)	760	760	760	760	760	760	760	760
Edward Springs Well No. 1R Supply Rate (gpm)	300	300	300	300	300	300	300	300
Edward Springs Well No. 2 Supply Rate (gpm)	225	225	225	225	225	225	225	225
Edward Springs Well No. 3 Supply Rate (gpm)	300	300	300	300	300	300	300	300
Stillaguamish Ranney Well Supply Rate (gpm)	2,250	2,250	2,250	2,250	2,250	2,250	2,250	2,250
Lake Goodwin Well Supply Rate (gpm)	350	350	350	350	350	350	350	350
Highway 9 Well Supply Rate (gpm)	-	-	-	-	-	-	-	-
Sunnyside Well No. 1R Supply Rate (gpm)	-	1,000	1,000	1,000	-	1,000	1,000	1,000
Sunnyside Well No. 2 Supply Rate (gpm)	-	1,000	1,000	1,000	-	1,000	1,000	1,000
Stillaguamish River WTP BPS Pumping Rate (gpm)	2,200	2,200	2,200	2,200	2,200	2,200	2,200	2,200
Cedarcrest BPS Pumping Rate (gpm)	2,400	2,400	2,400	2,400	2,400	2,400	2,400	2,400
Edward Springs BPS Pumping Rate (gpm)	-	-	-	-	3,500	3,500	3,500	3,500
Proposed 415 Zone BPS Pumping Rate (gpm)	-	-	-	-	-	-	-	-
Proposed 510 Zone BPS Pumping Rate (gpm)	-	-	-	-	-	-	-	-
Proposed 560 Zone BPS Pumping Rate (gpm)	-	3,000	3,000	3,000	-	3,000	3,000	3,000
Transfer from Everett Intertie (JOA Line) (gpm)	8,700	8,700	8,700	8,700	8,700	8,700	8,700	8,700

Separate fire flow analyses were performed on the system to size distribution system improvements and calculate fire flow availability. The hydraulic model for the fire flow analyses contained settings that correspond to MDD events. All sources of supply that are currently available to the system during a peak period were operating at their normal pumping rates, and the reservoir levels were modeled to reflect full utilization of operational, equalizing, and fire flow storage based on the maximum planning-level fire flow requirement. **Table 7-9** summarizes the operational conditions for the fire flow analyses for the existing year 2015, and year 2022, 2026, and 2036 systems.

Calibration

Hydraulic model calibration was completed during the preparation of the WSP. Hydraulic model calibration is achieved by adjusting the roughness coefficients of the water mains in the model so the resulting pressures and flows from the hydraulic analyses closely match the pressures and flows from actual field tests under similar demand and operating conditions. Initial Darcy-Weisbach roughness coefficients were entered in the model based on computed estimates of the coefficients from available pipe age and material data. For example, older water mains were assigned higher roughness coefficients than new water mains; thereby assuming that the internal surface of water pipe becomes

rougher as it gets older. Additional calibration of the model was achieved using field flow and pressure data that were collected throughout the system during hydrant testing for this purpose.

For the areas of the system that the City has owned and operated for some time, the average accuracy of the calibrated model was approximately 96 percent of the actual field data collected, with 90 percent of the individual analysis locations predicting the field results to an accuracy of 98 percent. However, in the Sunnyside-Whiskey Ridge annexation area that the City acquired from the PUD in 2014, discrepancies were found between the model and the field data collected. Extensive effort to identify the source of the discrepancies included reviewing as-builts and other mapping provided by the PUD, additional hydrant flow tests, additional field reconnaissance, confirmation of PRV settings, coordination with the City and PUD, as well as numerous sensitivity analyses in the model. This effort did not significantly improve the model calibration in the annexation area. It is likely that inconsistencies are the result of incorrect pipe diameter shown on as-builts, closed or partially closed valves in the system, and undocumented piping reconfigurations and improvements that had been completed by the PUD over the years. As City staff continue to operate and maintain the water system in the annexation area, they will note mapping and other operational inconsistencies and the model will be updated accordingly. Since the annexation area's 285 and 415 Zones are relatively small pressure zones and operate independent of the rest of the system, the system-wide model calibration and other system analyses are not impacted by these inconsistencies.

HYDRAULIC ANALYSIS RESULTS

Several hydraulic analyses were performed to determine the capability of the system to meet the pressure and flow requirements identified in **Chapter 5** and contained in WAC 246-290-230. The first analysis was performed to determine the pressures throughout the system under existing (i.e., 2015) PHD conditions. The results of this analysis were used to identify locations of low and high pressures. To satisfy the minimum pressure requirements, the pressure at all water service locations must be at least 30 psi during PHD conditions. In addition, the system should not have widespread areas with high pressures, generally considered to be more than 100 psi. A summary of the pressure deficiencies identified from the results of this analysis is contained in **Figure 7-1**.

The second set of analyses was performed to determine the capability of the existing water system to provide fire flow throughout the existing water system under MDD conditions. A separate fire flow analysis was performed for each node in the model to determine the available fire flow at a minimum residual pressure of 20 psi in the main adjacent to the hydrant and a maximum allowable water main velocity of 8 fps. More than 6,000 fire flow analyses were performed to comprehensively evaluate the water system. For each node analyzed, the resulting fire flow was compared to its general planning-level fire flow requirement, which was assigned according to its land use classification. As is typical of most water systems, the City's distribution system was constructed to meet fire flow requirements that were in place at the time of construction. Land use classification changes and/or increases in fire flow requirements over time may create deficiencies. A summary of the results of the analyses for representative system nodes is presented in **Figure 7-2**.

Table 4-13 in **Chapter 4** lists the general planning-level fire flow requirements for each land use classification. Since the fire flow requirement varies for buildings within each land use classification, the land use based fire flow requirements are only used as a general target for the primary purpose

of the system-wide analyses that were performed for this WSP. Additional improvements may be needed in areas where actual fire flow requirements exceed the planning-level targets and shall be the responsibility of the developer. The results of the fire flow analyses were used to identify undersized water mains and proposed water main improvements.

Once all deficiencies were identified, proposed water main improvements were included in the model, and pressure and fire flow analyses were performed throughout the system to demonstrate that the improvements will eliminate the deficiencies and meet the flow and pressure requirements. These analyses were modeled under projected year 2022, 2026, and 2036 MDD conditions to ensure that the improvements are sized sufficiently to meet the future systems' needs. The results of the fire flow analyses indicate that all fire flow and low pressure deficiencies are resolved by 2036 with proposed improvements. A description of these improvements and a figure showing their locations are presented in **Chapter 9**.

DEFICIENCIES

Several areas throughout the system have sufficient fire flow; however, high water velocities are experienced in the system because the water mains are undersized to carry the fire flows at acceptable water velocities. Operating the system with high water velocities can potentially damage the system due to the high pressure surges that commonly occur with high water velocities.

Some areas of the system have water mains that are more than 50 years old, which is beyond the average life expectancy of water mains. Approximately 2.5 percent of the City's water main is asbestos cement (AC) pipe, and 30.2 percent is cast iron pipe. Most of the AC and cast iron pipe is located in the older areas of the City. The City is planning to replace the aging water main in the future, as shown in the schedule of planned improvements in **Chapter 9**. All new water main installations are required to use ductile iron water main in accordance with the City's Water System Standards, a copy of which is included in **Appendix I**.

PRESSURE REDUCING STATIONS

This section evaluates the City's existing pressure reducing stations to identify deficiencies related to their current condition and operational capability.

EVALUATION AND DEFICIENCIES

The City has a total of 36 pressure reducing, pressure sustaining, and flow control stations. There are no known deficiencies with the existing stations.

As part of the pressure zone improvements described in **Chapter 9**, the 7000 64th Street NE PRV will be relocated so that an area of the 240 Zone can be converted to the 360 Zone.

Additionally, the 6513 52nd Street NE PRV will be decommissioned and a new PRV installed so that areas of the 415 Zone can be converted to the 285 Zone. These improvements are also described in **Chapter 9**.

Two new PRVs will be installed in the south end of the system to convert areas of the 415 Zone to the 360 Zone. These improvements are described in **Chapter 9**.

TELEMETRY AND SUPERVISORY CONTROL SYSTEM

This section evaluates the City's existing telemetry and supervisory control system to identify deficiencies related to its condition and current operational capability.

EVALUATION AND DEFICIENCIES

The water system has a Headquarters telemetry control panel at the Public Works Building on Columbia Avenue. The City also has a remote control facility located at the Stillaguamish River WTP. System facilities including, source, storage, and pumping, can be controlled with the telemetry system. There are no known deficiencies with the existing telemetry/SCADA system.

SYSTEM CAPACITY

This section evaluates the capacity of the City's existing water system components (e.g., supply, storage, and transmission) to determine the maximum number of ERUs it can serve. Once determined, system capacity becomes useful in calculating how much capacity is available in the water system to support new customers that apply for water service through the building permit process. The system capacity information, together with the projected growth of the system expressed in ERUs, as shown in **Chart 4-11** of **Chapter 4**, also provides the City with a schedule of when additional system capacity is needed.

ANALYSIS CRITERIA

The capacity of the City's system was determined from the limiting capacity of the water rights, supply, transmission, and storage facilities. The supply capacity analysis was based on the limiting capacity of the supply facilities and the system's MDD per ERU. The transmission capacity analysis was based on the total capacity of the transmission system for the supply sources and the system's MDD per ERU.

The storage capacity analysis was based on the storage capacity for equalizing and standby storage and the computed storage requirement per ERU. Operational and fire flow storage capacity were excluded from the storage analysis because these components are not directly determined by water demand or ERUs. For the analyses, a reserve amount equivalent to the existing operational and fire flow storage requirements were deducted from the total available storage capacity to determine the storage capacity available for equalizing and standby storage. This storage capacity available for equalizing and standby storage was divided by the existing number of ERUs presented in **Chapter 4** to determine the storage requirement per ERU.

The annual water rights capacity evaluation was based on the existing annual water rights, as summarized in **Chapter 6**, and the system's average day demand per ERU. The instantaneous water rights capacity evaluation was based on the existing instantaneous water rights, as summarized in **Chapter 6**, and the system's MDD per ERU.

The ERU-based demand data was derived from the average day demand of the system and demand peaking factors from **Chapter 4**.

CAPACITY ANALYSIS RESULTS

A summary of the results of the existing system capacity analysis is shown in **Table 7-10**. The results of the existing system capacity analysis indicate that the limiting capacity of the system is storage, which can support up to a maximum of approximately 55,246 ERUs. The existing water system has a surplus of approximately 13,977 ERUs based on this limiting component.

Table 7-10
Existing System Capacity Analysis

Demands Per ERU Basis	
Average Day Demand Per ERU (gal/day)	162
Maximum Day Demand Per ERU (gal/day)	346
Peak Hour Demand Per ERU (gal/day)	503
Source Capacity - Supply Sources	
Supply Source Capacity (gal/day)	21,717,734
Maximum Day Demand Per ERU (gal/day)	346
Maximum Supply Capacity (ERUs)	62,847
Source Capacity - Annual Water Rights	
Annual Water Right Capacity (gal/day)	23,375,309
Average Day Demand Per ERU (gal/day)	162
Maximum Annual Water Right Capacity (ERUs)	144,576
Source Capacity - Instantaneous Water Rights	
Instantaneous Water Right Capacity (gal/day)	27,785,894
Maximum Day Demand Per ERU (gal/day)	346
Maximum Instantaneous Capacity (ERUs)	80,407
Storage Capacity	
Maximum Equalizing & Standby Storage Capacity (gal)	11,755,650
Equalizing & Standby Storage Requirement Per ERU (gal)	213
Maximum Storage Capacity (ERUs)	55,246
Transmission Capacity	
Transmission Capacity (gal/day)	25,169,300
Maximum Day Demand Per ERU (gal/day)	346
Maximum Transmission Capacity (ERUs)	72,835
Maximum System Capacity	
Based on Limiting Facility - Storage	55,246
Unused Available System Capacity	
Maximum System Capacity (ERUs)	55,246
Existing (2015) ERUs	41,270
Surplus Capacity (ERUs)	13,977

A summary of the results of the 6-year projected system capacity analysis is shown in **Table 7-11**. The 6-year projected system capacity analysis includes improvements that are planned to be completed within the 6-year planning period, as described in **Chapter 9**. These improvements include the Lake Goodwin Standpipe replacement, the Sunnyside Wells coming online, a redundant pump station to the Cedarcrest BPS, and several pressure zone improvements. The results of the 6-year projected system capacity analysis indicate that the proposed improvements will increase the system capacity to approximately 72,300 ERUs based on the limiting component of supply. Thus, the system will have a surplus of approximately 26,229 ERUs in 2022 if the improvements are completed as planned.

Table 7-11
Year 2022 System Capacity Analysis with Proposed Improvements

Demands Per ERU Basis	
Average Day Demand Per ERU (gal/day)	162
Maximum Day Demand Per ERU (gal/day)	346
Peak Hour Demand Per ERU (gal/day)	503
Source Capacity - Supply Sources	
Supply Source Capacity (gal/day)	24,984,337
Maximum Day Demand Per ERU (gal/day)	346
Maximum Supply Capacity (ERUs)	72,300
Source Capacity - Annual Water Rights	
Annual Water Right Capacity (gal/day)	23,761,913
Average Day Demand Per ERU (gal/day)	162
Maximum Annual Water Right Capacity (ERUs)	146,967
Source Capacity - Instantaneous Water Rights	
Instantaneous Water Right Capacity (gal/day)	28,172,497
Maximum Day Demand Per ERU (gal/day)	346
Maximum Instantaneous Capacity (ERUs)	81,526
Storage Capacity	
Maximum Equalizing & Standby Storage Capacity (gal)	17,626,080
2022 Equalizing & Standby Storage Requirement (gal)	8,352,666
Equalizing & Standby Storage Requirement Per ERU (gal)	181
Maximum Storage Capacity (ERUs)	97,221
Transmission Capacity	
Transmission Capacity (gal/day)	25,169,300
Maximum Day Demand Per ERU (gal/day)	346
Maximum Transmission Capacity (ERUs)	72,835
Maximum System Capacity	
Based on Limiting Facility - Supply	72,300
Unused Available System Capacity	
Maximum System Capacity (ERUs)	72,300
Projected 2022 ERUs	46,071
Surplus Capacity (ERUs)	26,229

A summary of the results of the 10-year projected system capacity analysis is shown in **Table 7-12**. The 10-year projected system capacity analysis assumes the completion of the proposed 1.0 MG Soper Hill 415 Zone Reservoir. The results of the 10-year projected system capacity analysis indicate that the system capacity will be approximately 72,835 ERUs based on the limiting component of transmission. Thus, the system will have a surplus of approximately 23,770 ERUs in 2026.

Table 7-12
Year 2026 System Capacity Analysis with Proposed Improvements

Demands Per ERU Basis	
Average Day Demand Per ERU (gal/day)	162
Maximum Day Demand Per ERU (gal/day)	346
Peak Hour Demand Per ERU (gal/day)	503
Source Capacity - Supply Sources	
Supply Source Capacity (gal/day)	25,222,751
Maximum Day Demand Per ERU (gal/day)	346
Maximum Supply Capacity (ERUs)	72,990
Source Capacity - Annual Water Rights	
Annual Water Right Capacity (gal/day)	24,000,326
Average Day Demand Per ERU (gal/day)	162
Maximum Annual Water Right Capacity (ERUs)	148,441
Source Capacity - Instantaneous Water Rights	
Instantaneous Water Right Capacity (gal/day)	28,410,911
Maximum Day Demand Per ERU (gal/day)	346
Maximum Instantaneous Capacity (ERUs)	82,216
Storage Capacity	
Maximum Equalizing & Standby Storage Capacity (gal)	18,625,917
2026 Equalizing & Standby Storage Requirement (gal)	8,829,041
Equalizing & Standby Storage Requirement Per ERU (gal)	180
Maximum Storage Capacity (ERUs)	103,509
Transmission Capacity	
Transmission Capacity (gal/day)	25,169,300
Maximum Day Demand Per ERU (gal/day)	346
Maximum Transmission Capacity (ERUs)	72,835
Maximum System Capacity	
Based on Limiting Facility - Transmission	72,835
Unused Available System Capacity	
Maximum System Capacity (ERUs)	72,835
Projected 2026 ERUs	49,065
Surplus Capacity (ERUs)	23,770

A summary of the results of the 20-year projected system capacity analysis is shown in **Table 7-13**. The 20-year projected system capacity analysis includes improvements that are planned to be completed within the 20-year planning period, as described in **Chapter 9**. These improvements include additional pressure zone improvements. The results of the 20-year projected system capacity analysis indicate with the proposed improvements, the system capacity will be approximately 72,835 ERUs based on the limiting component of transmission. Thus, the system will have a surplus system capacity of approximately 15,392 ERUs in 2036 if the improvements are completed as planned.

Table 7-13
Year 2036 System Capacity Analysis with Proposed Improvements

Demands Per ERU Basis	
Average Day Demand Per ERU (gal/day)	162
Maximum Day Demand Per ERU (gal/day)	346
Peak Hour Demand Per ERU (gal/day)	503
Source Capacity - Supply Sources	
Supply Source Capacity (gal/day)	25,883,657
Maximum Day Demand Per ERU (gal/day)	346
Maximum Supply Capacity (ERUs)	74,902
Source Capacity - Annual Water Rights	
Annual Water Right Capacity (gal/day)	24,661,232
Average Day Demand Per ERU (gal/day)	162
Maximum Annual Water Right Capacity (ERUs)	152,529
Source Capacity - Instantaneous Water Rights	
Instantaneous Water Right Capacity (gal/day)	29,071,817
Maximum Day Demand Per ERU (gal/day)	346
Maximum Instantaneous Capacity (ERUs)	84,128
Storage Capacity	
Maximum Equalizing & Standby Storage Capacity (gal)	19,167,917
2036 Equalizing & Standby Storage Requirement (gal)	10,177,842
Equalizing & Standby Storage Requirement Per ERU (gal)	177
Maximum Storage Capacity (ERUs)	108,182
Transmission Capacity	
Transmission Capacity (gal/day)	25,169,300
Maximum Day Demand Per ERU (gal/day)	346
Maximum Transmission Capacity (ERUs)	72,835
Maximum System Capacity	
Based on Limiting Facility - Transmission	72,835
Unused Available System Capacity	
Maximum System Capacity (ERUs)	72,835
Projected 2036 ERUs	57,443
Surplus Capacity (ERUs)	15,392

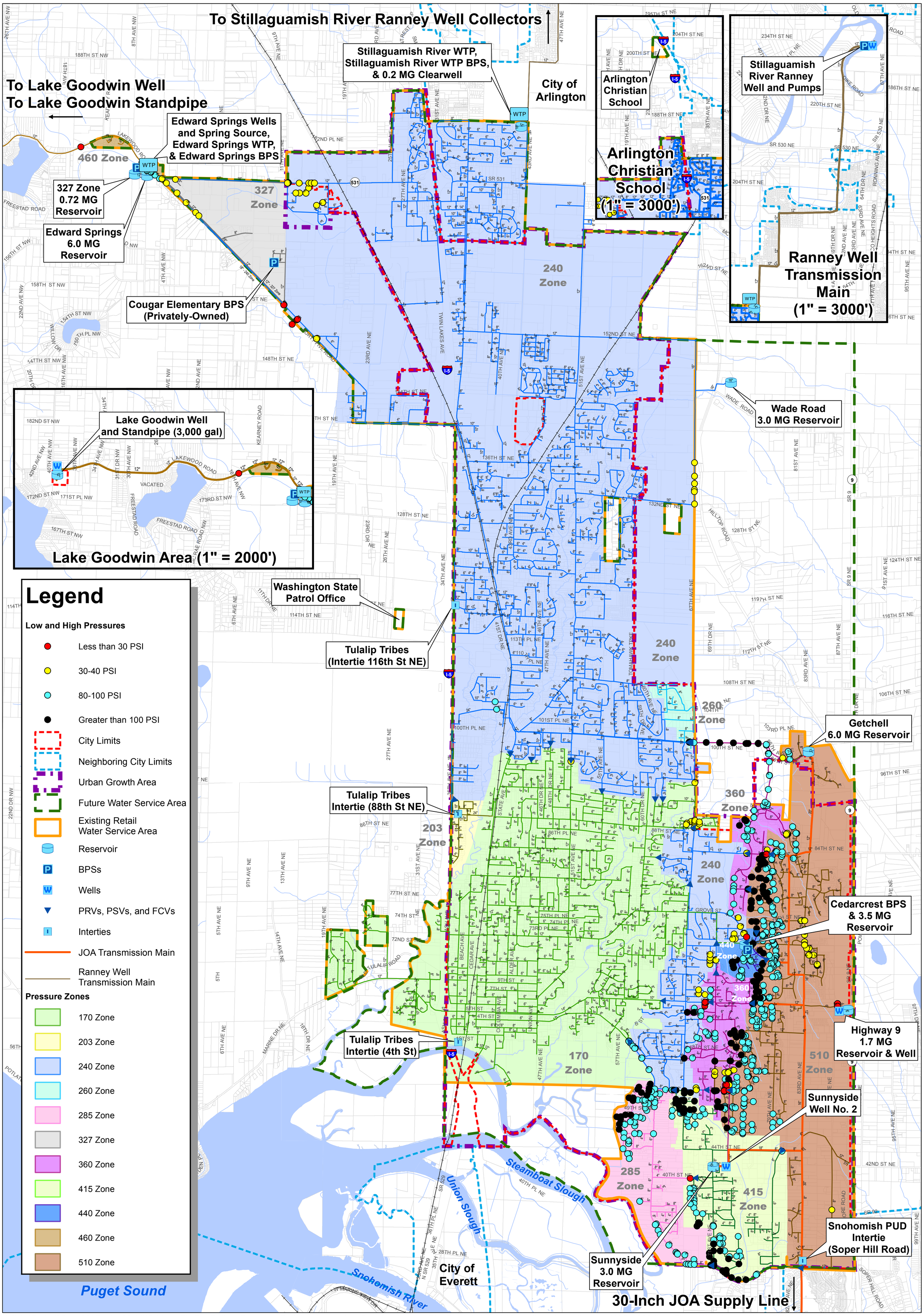

\\rh2\dfs\Bothell\Data\MAR\114-084\GIS\Maps\Fig 7-1 ExSys_Pressure_Deficiencies.mxd By:gdavidson Plot Date: 10/18/2016 Coordinate System: NAD 1983 StatePlane Washington North FIPS 4601 Feet

NORTH

1 inch = 2,000 feet

0 1,000 2,000 4,000 Feet

DRAWING IS FULL SCALE WHEN BAR MEASURES 2"

RH2 ENGINEERING

CITY OF Marysville WASHINGTON

Figure 7-1
Existing High and Low Pressure Areas
City of Marysville
2016 Water System Plan

Vicinity Map

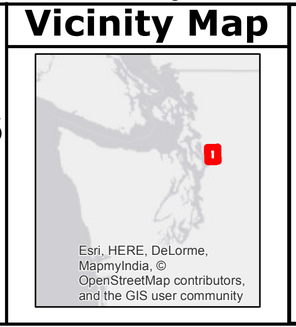

This map is a graphic representation derived from the City of Marysville Geographic Information System. It was designed and intended for City of Marysville staff use only; it is not guaranteed to survey accuracy. This map is based on the best information available on the date shown on this map.

Any reproduction or sale of this map, or portions thereof, is prohibited without express written authorization by the City of Marysville.

This material is owned and copyrighted by the City of Marysville.

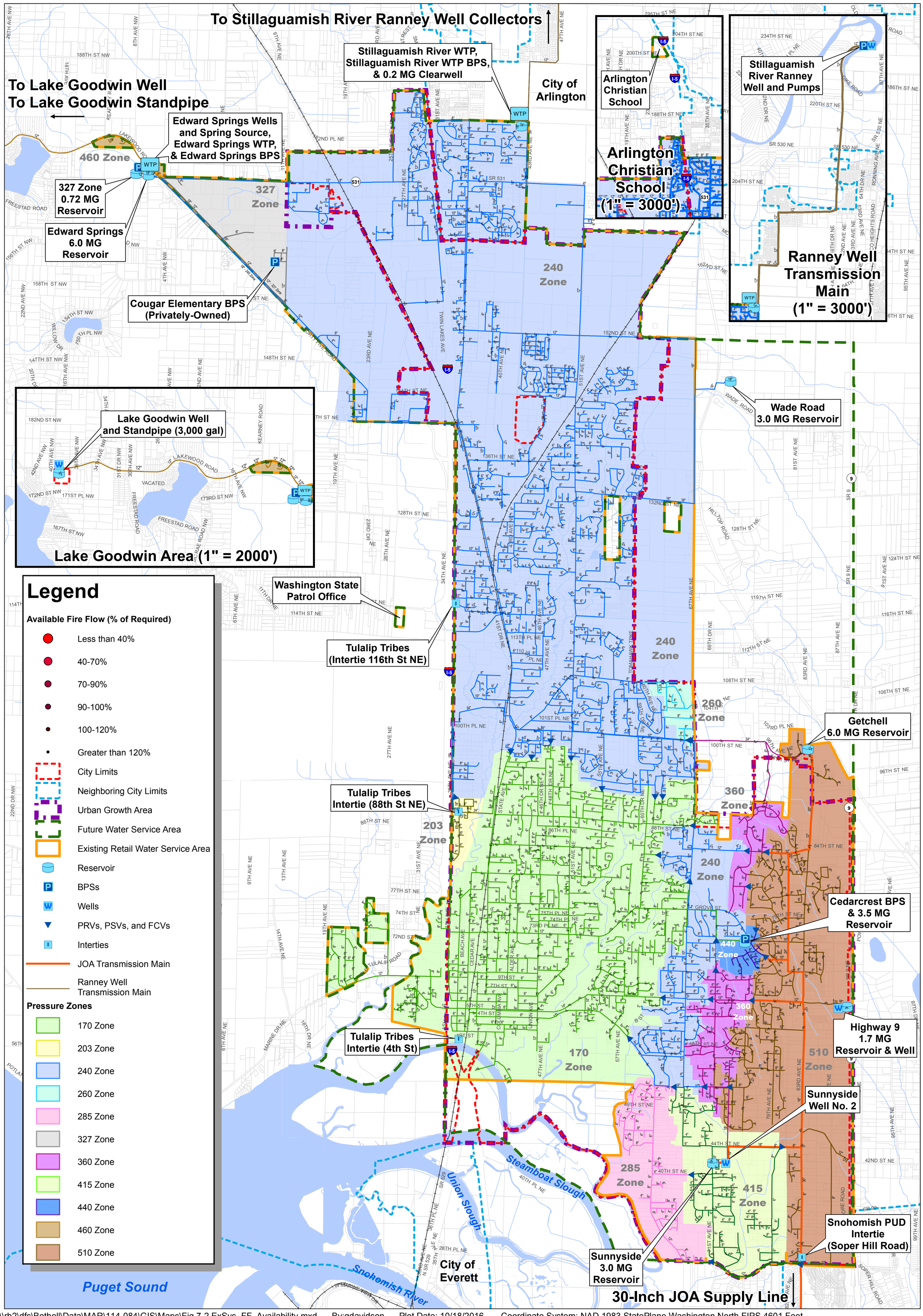

\\rh2\dfs\Bothell\Data\MAR\114-084\GIS\Maps\Fig 7-2 ExSys_FF_Availability.mxd By:gdavidson Plot Date: 10/18/2016 Coordinate System: NAD 1983 StatePlane Washington North FIPS 4601 Feet

NORTH

1 inch = 2,000 feet

0 1,000 2,000 4,000 Feet

DRAWING IS FULL SCALE WHEN BAR MEASURES 2"

Figure 7-2
Existing Available Fire Flow
City of Marysville
2016 Water System Plan

Vicinity Map

Esri, HERE, DeLorme, MapmyIndia, © OpenStreetMap contributors, and the GIS user community

This map is a graphic representation derived from the City of Marysville Geographic Information System. It was designed and intended for City of Marysville staff use only; it is not guaranteed to survey accuracy. This map is based on the best information available on the date shown on this map.

Any reproduction or sale of this map, or portions thereof, is prohibited without express written authorization by the City of Marysville.

This material is owned and copyrighted by the City of Marysville.

8 | OPERATIONS AND MAINTENANCE

INTRODUCTION

The City's water operations and maintenance (O&M) program consists of the following elements.

1. Normal operation of the water supply, treatment, and distribution system.
2. Emergency operation of the water system, with one or more of the components not available for normal use due to natural or man-made events.
3. Preventive maintenance program for ensuring that the water system is maintained in accordance with generally accepted standards.
4. Cross-connection control program, as required by state law, to ensure that there is no threat to the integrity of the water supply due to contamination from a customer's operations.

NORMAL OPERATIONS

CITY PERSONNEL

The City's water system personnel are under the direction of the Public Works Director. As shown in **Figure 8-1**, the Public Works Superintendent supervises daily operations of the Public Works Operations, Streets/Sanitation, and Water Resources Divisions and reports to the Public Works Director. The City Engineer, who also reports to the Public Works Director, supervises daily operations of the Engineering Division.

As shown in **Figure 8-1**, the Public Works Operations staff consists of several maintenance personnel that function under the Public Works Operations Manager. The Water Quality staff consist of several personnel that function under the Water Resources Manager. The water system tasks that are performed by the Public Works Operations and Water Quality staff include inspection, testing, installation, and repair of system facilities; routine operation and preventive maintenance; record keeping; administrative tasks; general clerical work; and corrective or breakdown maintenance required in response to emergencies.

PERSONNEL RESPONSIBILITIES

The key responsibilities of the water operations and maintenance staff are summarized below.

Public Works Director – Directs all activities and programs within the Public Works Department.

City Engineer – Plans, organizes, staffs, and manages the Engineering Division. Responsible for development of 6-year capital improvement program for the water utilities and annual capital projects, including development of scopes of work and consultant selection.

Project Manager – Under the direction of the City Engineer, oversees assigned annual capital projects. Develops project schedules and scopes of work, and selects consultants. Tracks progress through the development of plans, specifications, and estimates. Coordinates bidding and contract execution, reviews and approves submittals, issues progress reports and pay estimates, and performs construction management/inspection and project closeout. Maintains the water distribution model.

Public Works Superintendent – Responsible for planning, organizing, staffing, and managing within the Operation and Maintenance Division. For the water supply system, responsible for repair and maintenance of the water system, including transmission and distribution mains, source water facilities, storage facilities, and booster pump stations. Oversees all annual maintenance programs, including flushing, valve exercising, and source water well and reservoir inspections. Tasked with budget development for the Operation and Maintenance Division. Ensures that any required public notifications regarding the water system are made and may serve as the press contact.

Public Works Operations Manager – Support to the Public Works Superintendent as assigned. Responsible for all operational activities associated with water supply, distribution, pumping, and storage systems, including distribution main flushing, valve exercising, and well monitoring. Responsible for the Preventive and Corrective Maintenance Program and other routine maintenance. Supervises new water service installation.

Utility Maintenance Lead – Reports to the Public Works Operations Manager and is responsible for all maintenance activities associated with water supply, distribution, pumping and storage systems, including distribution main flushing, valve exercising, and well monitoring. Also performs preventive maintenance and checks calibration and proper monitoring of telemetry equipment.

Water Quality/Filtration Lead – Responsible for the operation and maintenance of the Stillaguamish Membrane Water Treatment Facility. Ensures all water quality monthly reports are complete and submitted to the proper authorities. Responsibilities include meter reading/repair, water quality monitoring and record keeping, and water conservation and cross-connection control programs.

Construction Lead – Reports to the Public Works Operations Manager and is responsible for construction activities throughout the distribution system including looping of dead-end lines, extending water mains, installing valves, and installing/replacing hydrants. Oversees emergency repairs of water main breaks and utility locates.

Program Specialist/Customer Relations Representative – Manages customer inquiries related to dirty water, pressure extremes, and taste and odor. Tracks and coordinates all inquiries with the Operations and Water Quality Manager until the problem is resolved.

Fleet/Facility Manager – Organizes, staffs, and manages the Fleet/Facility Division. Responsibilities include preventative maintenance and repairs on all equipment, vehicles, small tools, and emergency generators used by Public Works. Also responsible for procurement, including purchase of new equipment, vehicles, and materials (e.g., pipe, meters, valves, and fittings) used by the utility.

CERTIFICATION OF PERSONNEL

Chapter 246-292 Washington State Administrative Code (WAC) requires that the City's water system is operated under the direct supervision of a Certified Operator. The City's water system requires a Water Distribution Manager. In addition, specialty certification is required for backflow device inspection and testing.

The City is in full compliance with current laws and regulations regarding staff certification and training. Numerous City Public Works employees possess Washington State Department of Health (DOH) certifications. **Table 8-1** shows the current certifications of the City's O&M staff that are pertinent to operation of the City's water system. It is City policy to maintain a well-qualified,

technically trained staff. The City annually allocates funds for personnel training, certification, and membership in professional organizations, such as the American Water Works Association (AWWA). The City believes that the time and money invested in training, certification, and professional organizations are repaid many times in improved safety, skills, and confidence.

Table 8-1
Personnel Certification

Name	Position	Certification
Ralph Avey	Lead Worker I	CCS, WDM 1, WDS
Ron Bryant	Meter Reader/Repair	WDM 2
John Buell	Maintenance Worker II - Utility Maintenance	WDM 2, WDS, WTPO IT
Doug Byde	Public Works Superintendent	BTO, WDM 1, WTPO 1
Kari Chennault	Water Resources Manager	EIT
Kimarie Daggett	Lead Worker II - Utility Maintenance	BAT, CCS, WDM 3, WDS, WTPO 2
Julie Davis	Cross Connection Specialist	BAT, CCS, WDM 2, WDS, WTPO 1
Robert Dzawala	Maintenance Worker II - Utility Construction	CCS, WDM 1
Lois Geist	Maintenance Worker II - Utility Maintenance	BAT, CCS, WDM 1, WTPO IT
Kevin Gessner	Maintenance Worker II - Utility Maintenance	WDM 1
Krista Gessner	Water Quality Specialist	BAT, CCS, WDM 2, WTPO 1
Ron Gettle	Maintenance Worker II - Utility Construction	WDM 1
Billy Gilbert	Water Quality Specialist	BAT, CCS, WDM 2, WTPO 1
Josh Guenzler	Maintenance Worker II - Utility Construction	WDM 1
Ryan Keefe	Maintenance Worker II - Utility Construction	WDM 1
Tim King	Lead Worker II - Utility Construction	WDM 2
Karen Latimer	Public Works Operations Manager	BTO, CCS, WDM 4, WDS, WTPO 3
Corey Miller	Maintenance Worker II - Utility Construction	WDM 1
Sean Olson	Maintenance Worker II - Utility Construction	WDM 2
Jason Strope	Maintenance Worker II - Utility Construction	WDM IT
Corey Watson	Maintenance Worker II - Utility Maintenance	WDM 1
Carl Wineland	Maintenance Worker II - Utility Maintenance	WDM 1
Brad Zahnow	Water Quality Lead	BAT, CCS, WDM 3, WTPO 2

Certification Definitions
BAT - Backflow Assembly Tester
BTO - Basic Treatment Operator
CCS - Cross Connection Control Specialist
EIT - Engineer in Training
WDM - Water Distribution Manager
WDS - Water Distribution Specialist
WTPO - Water Treatment Plant Operator

AVAILABLE CHEMICALS AND EQUIPMENT

The Public Works Department owns heavy equipment such as dump trucks, graders, rollers, forklifts, backhoes, and bulldozers. If necessary, larger equipment is leased or rented on an as-needed basis from local suppliers. The City's maintenance and construction crews have personnel trained and experienced in heavy equipment operation.

A 60 kilowatt (KW) trailer-mounted diesel generator is positioned at the Public Works Department yard and available for emergency use at various sites in the service area. A second 60 KW trailer-mounted diesel generator is positioned at the Public Works Department and dedicated for headquarters use during emergencies.

Smaller commonly used tools and equipment are carried in the employee's trucks or are readily available from the stockroom. Tools and equipment such as pumps, small compressors, portable generators, pressure washers, and power tools are available from the stockroom. Larger, infrequently used items are rented from various equipment rental companies located in the City.

The Public Works Department keeps an inventory of commonly needed parts, as well as emergency supplies, at the Public Works yard and stockroom. The City's supply department tracks the inventory and orders additional supplies as required. Critical spare equipment kept in stock includes meters, meter boxes, various valves of all necessary sizes, pipe fittings, pipe, emergency clamps of various sizes, etc. Large non-emergency items are purchased on an as-needed basis.

Chemicals are used at several of the City's facilities. Chlorine in the form of 12.5-percent sodium hypochlorite is added to the Edward Springs sources for disinfection purposes. The chlorination facilities at this site consist of a separate, alarmed chlorination building housing one bulk storage tank and chemical metering pumps. The metering pumps are operated in a lead/lag configuration where, upon failure of the lead pump, the lag pump will deliver the required dosage and a notification alarm will sound. On a weekly basis, maintenance crews monitor bulk sodium hypochlorite usage and schedule deliveries as needed.

The Stillaguamish River Water Treatment Plant uses citric acid and sodium hypochlorite for cleaning the membrane modules. Sodium hypochlorite is also used for disinfection of the membrane plant's filtrate prior to entering the clearwell. Sodium bisulfite is used to neutralize the Clean In Place oxidants prior to disposal. Sodium hydroxide is used for pH adjustment of the disposed cleaning residual. **Table 8-2** lists the types, storage location, and storage quantities of chemicals used at the Stillaguamish River Water Treatment Plant.

Table 8-2

Stillaguamish River Water Treatment Plant Chemicals

Chemical	Storage Location	Storage Quantity
Sodium Bisulfite ($NaSO_3$)	Chemical Storage Room	16 gallons
Sodium Hydroxide (NaOH)	Chemical Storage Room	27 gallons
Sodium Hypochlorite (NaOCL)	Hypochlorite Storage Room	1,000 gallons
Citric Acid	Membrane Room	53 gallons

Sodium hypochlorite is also used at the Lake Goodwin Well.

The following representatives typically provide supplies and chemicals to the City.

- Citric Acid, Sodium Hypochlorite: Northstar Chemical, (503) 625-3770
- Sodium Bisulfite, Sodium Hydroxide: Cascade Columbia Distribution, (206) 282-6334

The Public Works Department utilizes several different types of communications equipment to ensure a reliable and redundant means of communication within the department. All employees are equipped with cellular telephones, which are pre-loaded with contact information for City personnel. There is back-up radio communication available in the vehicles. Most existing vehicles and all new vehicles are equipped with a public works communication radio, and handheld radios are also available. These radios can communicate effectively in the southern half of the City, but do not communicate well in the northern half of the City since a repeater was removed several years ago. The City is actively working to re-establish strong public works radio communication throughout the City, including researching what necessary equipment and/or licensing is needed to install a repeater or other equipment.

ROUTINE OPERATIONS

Routine operations involve the analysis, formulation, and implementation of procedures to ensure that the facilities are functioning efficiently, and meeting pressure requirements and other demands of the system. The utility's maintenance procedures are good, with repairs being made promptly so customers receive high-quality water service.

CONTINUITY OF SERVICE

As a municipality, the City has the structure, stability, authority, and responsibility to ensure that water service will be continuous. For example, changes in the City Council or staff would not have a pronounced effect on the City's customers or quality of service.

ROUTINE WATER QUALITY SAMPLING

The DOH has adopted federal regulations that specify minimum monitoring requirements for water systems. The sampling requirements depend on the population served, source type, and treatment provided. The specific requirements and the minimum monthly routine coliform sampling requirements are contained in WAC 246-290-300. DOH also provided the City with an annual summary of all required water quality testing. The City currently performs all routine coliform sampling throughout the distribution system. Further discussion of the water quality monitoring program is contained in **Chapter 6** and **Appendix K**.

CROSS-CONNECTION CONTROL

The City has adopted a cross-connection control program to comply with WAC 246-290-490 pertaining to contamination of potable water due to cross connections. The City's Cross-Connection Control Program is included in **Appendix H**. Backflow prevention devices are required at service connections where a potential for contamination exists, as outlined in the City's Municipal Code. The Water Treatment Plant Operator is required to be a certified Cross-connection Control Specialist, as shown in **Table 8-1**.

RECORDKEEPING AND REPORTING

DOH has enacted regulations for recordkeeping and reporting that may be found in WAC 246-290-480. The regulations identify recordkeeping and reporting procedures for operations and water quality testing.

Records are compiled and stored by each respective department that is responsible for the activity being documented. Engineering maintains records of capital projects; Water Quality maintains records of water quality programs and drinking water regulatory records; and Water Operations maintains records of water distribution system operation and maintenance/repair records. Water Quality and Water Operations both maintain records of purchasing, bidding (non-capital projects), and other miscellaneous records. Official capital project bidding and construction documents are maintained by the City Clerk's office. Records are maintained in accordance with the Washington State records retention regulations. The City Clerk's office maintains the retention schedule of all documents City wide. Public Works Administration assists with records retention for Public Works, including Engineering, Water Quality, and Water Operations. The City Clerk's office and Engineering Department maintain a schedule of project files, file numbering system, and file storage location (generally capital projects only). Other records are stored locally at each department. Water Operations operation, maintenance, and repair records are maintained electronically through the City's Work Management System. The City also maintains the Marysville Information Retrieval System through which all records maintained by the City Clerk's office may be accessed.

By computer network tracking, the City's Public Works Department has developed a filing system that breaks down the well sites, reservoirs, distribution system, water meters, and other necessary components that make up a service area. The City also involves department heads and supervisors to maintain and track their areas of responsibility. On an annual basis maintenance records are reviewed for the annual report. The Public Works Operations Manager is responsible for submitting all state-required monthly forms to the appropriate agencies.

Recordkeeping

Records shall be kept for chlorine residual and other information as specified by DOH. DOH requires retention of critical records dealing with facilities and water quality issues as summarized below.

- Bacteriological analysis results: 5 years.
- Chemical analysis results: for as long as the system is in operation.
- Daily source meter readings: 10 years.
- Other records of operation and analyses as may be required by DOH: 3 years.
- Documentation of actions to correct violations of primary drinking water standards: 3 years after last corrective action.
- Records of sanitary surveys: 10 years.
- Project reports, construction documents and drawings, inspection reports, and approvals: life of the facility.
- Construction Completion Reports: life of the facility.

Reporting

1. The City must report the following to DOH.

- Within 48 hours: A failure to comply with the primary standards or treatment technique requirements specified in Chapter 246-290 WAC.
- Within 48 hours: A failure to comply with the monitoring requirements specified in Chapter 246-290 WAC.
- As soon as practical, but no later than 24 hours: All Tier 1 violations, including a violation of a primary maximum contaminant level (MCL). A complete list of Tier 1 violations is located in Code of Federal Regulations (CFR) 141.202.
- As soon as practical, but no later than 24 hours: A backflow incident per WAC 246-290-490(8)f.

2. The City must submit to DOH all applicable reports required by Chapter 246-290 WAC. Monthly reports are due by the tenth day of the following month, unless otherwise specified.
3. Daily source meter readings must be made available to DOH on request.
4. Total annual water production records for each source must be made available to DOH upon request.
5. A water facilities inventory and report form (WFI) must be submitted to DOH within 30 days of any change in name, category, ownership, or responsibility for management of the water system.
6. The City must notify DOH of the presence of:

- Coliform in a sample within 10 days of notification by the testing laboratory; and
- Fecal coliform or *E. coli* in a sample by the end of the business day in which the City is notified by the testing laboratory.

7. When a coliform MCL violation is determined, the City must:

- Notify DOH within 24 hours of determining acute coliform MCL violations;
- Notify DOH before the end of the next business day when a non-acute coliform MCL is determined; and
- Notify water customers in accordance with WAC 246-290-495.

8. If volatile organic compound (VOC) monitoring is required, a copy of the results of the monitoring and any public notice must be sent to DOH within 30 days of receipt of the test results.

Other Reports

Several other reports are required for Washington State agencies, including the Department of Revenue, Department of Labor and Industries, Department of Social and Health Services, Department of Ecology, and the Employment Security Department. All of these reports are completed according to their instructions.

OPERATIONS AND MAINTENANCE RECORDS

Records include, but are not limited to, the following.

- Water quality
- MCL violations
- Water quality complaints
- Backflow prevention
- Maintenance and construction
- O&M manuals
- Personnel records
- Flushing and distribution system
- Well operation monitoring
- Surface Water Treatment Rule Disinfection Monthly Report
- Water Treatment Plant Monthly Report
- Water Treatment Plant Pressure Decay Test and Particle Count Monthly Report

SAFETY PROCEDURES AND EQUIPMENT

Safety is a primary concern and responsibility of all water O&M staff. The City has taken steps toward educating its staff and providing resources to ensure a safe working environment. The City will strive to improve its safety program on an ongoing basis. The AWWA publishes a manual entitled *Safety Practices for Water Utilities (M3)* that describes safety programs and provides guidelines for safe work practices and techniques for a variety of water utility work situations.

The following identifies procedures to be followed for O&M tasks that involve the most common potential work place hazards in the water system.

Use of Chlorine or Chlorine Products

Standard Procedure – Handle with care, provide adequate ventilation, and wear safety glasses and rubber gloves.

Use of Water Treatment Chemicals

Standard Procedure – Follow material safety data sheets (MSDS) and facility standard operating procedures.

Working in Confined Spaces

Standard Procedure – Follow state requirements for confined space entry.

Working around Heavy Equipment

Standard Procedure – Obtain proper training and follow all safety procedures.

Working in Traffic Areas

Standard Procedure – Wear proper clothing and provide adequate signage and flagging for work area.

Working on or around Water Reservoirs

Standard Procedure – Follow proper safety harness procedures for working on tall structures.

Working in or around Pump Stations

Standard Procedure – Obtain proper training and follow all safety procedures for working on pumps and electrical equipment.

Working on Asbestos Cement (AC) Water Main

Standard Procedure – Obtain proper training and follow all safety procedures for working with asbestos materials.

The Public Works Department follows all appropriate Occupational Safety and Health Administration (OSHA) and Washington Industrial Safety and Health Act (WISHA) regulations in its day-to-day operations and complies with the following state requirements.

- WAC 296-62-145 to 14529 Part M – Entry into confined spaces.
- WAC 296-155-650 to 66411 Part N – Shoring of open ditches.
- WAC 296-155-429 – Lockout-tagout for work on energized or de-energized equipment or circuits.
- Chapter 296-155 WAC Part C1 – Fall restraint for access to the top of the City's water reservoirs.
- *Manual on Uniform Traffic Control Devices* (MUTCD) – Traffic control for work in the public right-of-way.

Additional safety procedures are documented in the City's Accident Prevention Program.

The City's operations and maintenance staff undergo regularly-scheduled safety training. The list below details the City's safety training programs and the intervals at which they are completed.

- Heat safety (annual training)
- Accident prevention (upon employment, as changes are made)
- Employee safety orientation (upon employment, as changes are made)
- Bloodborne policy (upon employment, annually thereafter)
- Bloodborne pathogens (upon employment, annually thereafter)
- Hepatitis "B" Vaccine offer/decision (upon employment)
- Airborne pathogens (upon employment, annually thereafter)
- First Aid/CPR/AED (every 2 years First Aid and CPR, annually AED)
- Flagger certification (every 3 years)

- Hearing conservation (annually)
- Hearing protection fitting (as needed)
- Forklift (every 3 years)
- Confined Space (as needed)
- Air monitor training (annually)
- Trenching/excavating (as needed)
- Defensive driving (as needed)
- Trailer transports and tie downs (annually)
- Hazardous Communication/MSDS (initially in 2014, as changes are made)
- Fire extinguishers (2013, as needed)
- Electrical safety (as needed)
- Propane safety (2011, as needed)
- Body mechanics (2014, as needed)
- Personal Protective Equipment (PPE) policy (as needed)
- Lockout/Tagout policy (annually)
- Fall protection (2014, annually)
- Portable ladders (2014, as needed)
- Power hand tools (2014, annually)
- Hand tools (2014, as needed)
- Compressed air safety (2014, as needed)
- Chain saw hazards and tree removal (2012, annually)
- Machine guarding (annually)
- Aerial lifting equipment/scissors (2014, every 3 years)
- Boom trucks (2008, every 3 years)
- Mobile Crane Operator Certification (2012, every 5 years)
- Overhead cranes (2012, every 5 years)
- Rigging and signaling (2012, every 5 years)
- Portable generator training (annually)
- Cutting and welding (2014, as needed)
- High pressure washer equipment (2008, as needed)

- Railroad safety awareness (2012, as needed)
- Asbestos cement work place practices (2012, as needed)
- Job safety analysis (as needed)

EMERGENCY OPERATIONS

CAPABILITIES

The City is well equipped to accommodate short-term system failures and abnormalities in accordance with WAC 246-290-420. Its capabilities are as described in the sections that follow.

Multiple Supply Capability

The City could lose the operation of one of its supply sources without adversely impacting its ability to provide emergency supply to customers.

Multiple Reservoirs

Water storage is provided by nine active reservoirs that are located at eight different sites. The pressure reducing valves (PRVs) and supply facilities interconnecting various pressure zones and reservoirs provide sufficient redundancy to prevent service disruption when one of the reservoirs is out of service for cleaning, painting, or repairs.

Distribution System

The City has attempted to loop water mains wherever possible to improve water circulation (i.e., water quality) and minimize impacts to the system in the event that a portion of the distribution system must be taken out of service for maintenance or repairs.

Emergency Equipment

The City is equipped with the necessary tools to deal with common emergencies. If a more serious emergency should develop, the City will hire a local contractor who has a stock of spare parts necessary to make repairs to alleviate the emergency condition.

Emergency Telephone

During the regular work day, water emergencies are routed to the appropriate department. After-hours water emergencies are routed to the standby duty person. After-hours messaging on the City phone tree (main phone lines for Public Works Administration and City Hall) instructs the caller to dial 911 and report the emergency (can be other than water emergency). Calls made to 911 are received by the City of Marysville Police Records Division, which is in operation 24 hours a day, 7 days a week year round. Police Records personnel make direct contact with the standby duty person and relay the emergency information.

On-call Personnel

The on-call person (standby duty person) is available 24 hours a day, 7 days a week year round. They are equipped with a service vehicle and can generally respond to a call within 30 minutes. A list of emergency telephone numbers is provided to each on-call employee.

In the event of an after-hours emergency, the standby duty person responds, assesses the situation, and takes appropriate action to resolve the emergency situation. Appropriate action may include calling out other qualified, knowledgeable, or appropriately certified individuals. The standby duty person notifies the Public Works Operation Manager about all water emergencies as they occur.

New employees are not placed on-call until they are familiar with the water system and maintenance procedures and have met the minimum standards, certification, and qualifications.

Material Readiness

Some critical repair parts, tools, and equipment are on-hand and kept in fully operational condition. As repair parts are used, they are re-ordered. Inventories are kept current and adequate for most common emergencies that reasonably can be anticipated. The City has ready access to an inventory of repair parts, including parts required for repair of each type and size of pipe within the service area.

EMERGENCY RESPONSE PLAN AND VULNERABILITY ASSESSMENT

A Vulnerability Assessment and Emergency Response Plan have been prepared that conform to the requirements of the Bioterrorism Act of 2002. The documents contain a vulnerability assessment of the City's water system facilities, a contingency operation plan for responding to emergency events, a list of water personnel responsible for making decisions in emergency situations, and other elements. The Vulnerability Assessment and Emergency Response Plan also contain detailed action plans and other confidential information that is exempt from public disclosure under the provisions of the Revised Code of Washington (RCW) 42.56.210. They are available for review by authorized personnel on a need-to-know basis. Contact the Emergency Response Plan Administrator for additional details.

PUBLIC NOTIFICATION

The Federal Safe Drinking Water Act (SDWA) and WAC 246-290-495 require purveyors to notify their customers if any of the following conditions occur.

- Failure to comply with a primary MCL described under WAC 246-290-310.
- Failure to comply with a surface water treatment technique.
- Failure to comply with monitoring requirements under Chapter 246-290 WAC.
- Failure to comply with testing requirements.
- Failure to comply with a DOH order.
- Failure to comply with a variance or exemption schedule from DOH.
- If the system is identified as a source of waterborne disease outbreak.
- If DOH issues the system a category red operating permit.

- If DOH issues an order.
- If the system is operating under a variance or exemption.

Specific notice content, distribution channels, and time limit requirements, as specified in WAC 246-290-495, must be in compliance when notification is required. The City's public notification notices for response are included in **Appendix Q**.

PREVENTIVE MAINTENANCE

Maintenance schedules that meet or exceed manufacturer's recommendations have been established for all critical components in the City's water system. Water quality and maintenance technicians conduct daily inspections and perform preventative/corrective maintenance on pump stations, reservoirs, PRVs, and other distribution system components. Job standards have been developed for most maintenance tasks/activities performed by these technicians and are on file with the City.

The following schedule lists key preventative maintenance tasks and the intervals at which they are performed.

SUNNYSIDE RESERVOIR/WELL

Weekly	Perform weekly inspections.
Monthly	Perform well maintenance.
Quarterly	Perform quarterly inspections. Perform well soundings.
As Needed	Perform grounds maintenance and control valve maintenance.

HIGHWAY 9 RESERVOIR

Weekly	Perform weekly inspections.
Quarterly	Perform quarterly inspections and perform maintenance required by inspection results.
As Needed	Perform grounds maintenance.

CEDARCREST RESERVOIR

Weekly	Perform weekly inspections.
Quarterly	Perform quarterly inspections.
As Needed	Perform grounds maintenance and control valve maintenance.

FORMER KELLOGG MARSH SITE

As Needed	Perform grounds maintenance.

GETCHELL RESERVOIR

Weekly	Perform weekly inspections.
Quarterly	Perform quarterly inspections.
As Needed	Perform grounds maintenance and control valve maintenance.

WADE ROAD RESERVOIR

Weekly	Perform weekly inspections.
Quarterly	Perform quarterly inspections.
As Needed	Perform grounds maintenance and control valve maintenance.

STILLAGUAMISH RIVER WTP

Daily	*Grounds/Treatment Plant:* Inspect exterior fence and gates. Inspect building exterior. Inspect clearwell exterior. Inspect for any leaks within building. *Clearwell Outlet:* Inspect pumps for unusual noise, vibration, temperature, lubrication if running. Verify normal chlorine, pH, temperature readings. Standardize/calibrate pH probe. *Systems Interface HMI:* Verify if there are any active alarms. *Clearwell Inlet Analyzers:* Verify normal chlorine, pH, temperature readings. Verify normal turbidity reading. Standardize/calibrate pH probe. *Zenon HMI/Permeate:* Check for any alarms. Note flows, levels, status of trains. Inspect pumps for normal noise, vibration. *Sodium Hypochlorite Room:* Check tank for leaks/level. Verify pump status. Release air from hypochlorite lines. *Chemical Storage Room:* Check for leaks. *Raw Water Inlet:* Note raw turbidity. Check for leaks. *Compressor Room:* Check for unusual noise or vibration, verify safety guards are in place. *Vacuum Pumps:* Check for unusual noise or vibration.
Every 5 days	*Clearwell Outlet:* Verify/calibrate chlorine analyzer. *Clearwell Inlet Analyzers:* Verify/calibrate chlorine analyzer.
Weekly	*Grounds/Treatment Plant:* Clean/vacuum building. Flush eye washes (notify Water Quality Department prior). *Clearwell Inlet Analyzers:* Verify turbidimeter. Inspect Photocell (bubble must be visible). Clean turbidimeter.

	Zenon HMI/Permeate: Verify laser turbidimeters. Clean laser turbidimeters. Check oil level on CIP and process pumps. Check stuffing box, seals, piping above pumps. *Raw Water Inlet:* Verify turbidimeters. Clean turbidimeters. Inspect Photocell (bubble must be visible). *Compressor Room:* Manually operate the pressure relief and condensation valves on compressors. Clean cooling surfaces of compressors. Check for air leaks on compressors. Manually operate condensation drain on air dryer. *Vacuum Pumps:* Manually drain (run vacuum pumps manually).
Monthly	*Aeration Blowers and Valves:* Cycle the blowers to verify that the switch is operating correctly. *Sodium Hypochlorite, Bisulfite, Hydroxide, and Citric Acid Pumps:* Examine back pressure valves for ruptured diaphragm. *Inspect Valves During Operation:* MIT: valves fully open to fully closed. During MIT, note PSI reading on permeate transmitters for Train No. 1 and Train No. 2. Train No. 1 and Train No. 2 M-Clean valves fully open and closed. *Surge Tank and Associated Components:* Check water/air level in sight tube (drain in winter). Water level should be 50 percent on sight tube. *Inspect and Operate Overhead Crane:* Operate crane in all directions. Lower crane hook to floor and back.
Quarterly	*Zeeweed Modules:* Check permeate and air hoses for leaks and cracks. Check camlocks for worn or missing parts. Verify aeration is functioning correctly by observing the membrane tank. Train No. 1 – Clean with sodium hypochlorite and/or citric acid. Train No. 2 – Clean with sodium hypochlorite and/or citric acid. *Vacuum Pumps:* Clean inlet filter. Clean protecting screen. Check gearing oil quarterly or every 1,500 hours. *Air Compressors:* Drain, clean, and service airline filters that feed valve actuators. *Aeration Blowers and Valves:* Inspect all electrical switches, relays, and mechanical activators for signs of wear. *Sodium Hypochlorite, Bisulfite, Hydroxide, and Citric Acid Pumps:* Rotate tubing on peristaltic pumps. Check for leaks, back plate. Check suction/discharge lines/valves; tighten if necessary. Check fit of head valve and intake lines; tighten if necessary. Check leakage hole at end disc for moisture. Check metering diaphragm for wear. Check electrical connection for wear. *Inspect Valves During Operation:* Check flange bolting for loosening. Inspect valves and surrounding area for previous or existing leakage at flange faces or shaft. Check piping and/or wiring to actuators and related equipment for looseness. *Laser Turbidimeters:* Calibrate turbidimeters.

	Turbidimeters: Calibrate raw water turbidimeter and note the gain after calibration. Calibrate CFE turbidimeter and note the gain after calibration. *Chlorine/pH Analyzers:* Clearwell inlet Cl_2 rebuild/fill chlorine probe. Calibrate clearwell inlet pH probe. Clearwell outlet Cl_2 rebuild/fill chlorine probe. Calibrate clearwell outlet pH probe. *Stainless Steel:* Clean and inspect piping for corrosion. *Surge Tank and Associated Components:* Drain, flush, and fill surge tank (never during plant production).
Semi-Annually	*Process Pumps:* Check the foundation and hold down bolts for tightness. Change oil quarterly, every 2,000 hours, or if cloudy/contaminated. Check shaft alignment/tighten guard. Where possible, remove fan cover and clean off dust from fan and airway. *Sodium Hypochlorite, Bisulfite, Hydroxide, and Citric Acid Pumps:* Calibrate pump. Use performance curves in vendor date. *Air Release Valves:* Disassemble valve and wash body and float with clean water. Clean the drainage elbow. Wash the seal plug assembly with clean water. Check the operation of the seal assembly; replace if worn.
Annually	*Zeeweed Modules:* Check cassettes for level. *Backpulse and CIP Tanks:* Change the filter element. *Process Pumps:* Check pump capacity, pressure, and power. *Air Compressors:* Inspect the pressure switch diaphragm and contact. Inspect the motor and starter contact. Inspect the integral moisture separator, clean as required (black canister on wall). Change the filter element when the pressure drop increases. Inspect the bonnet vent hole, which should be kept clean. Clean the integral filter/regulator when the pressure drops (clean with soapy water). *Aeration Blowers and Valves:* Check V-belt condition/tightness. Change oil every year, or 4,000 hours. Inspect inlet filter, replace every 8,000 hours or as needed. Every 8,000 hours, grease hinged motor support. *Sodium Hypochlorite, Bisulfite, Hydroxide, and Citric Acid Pumps:* After 20,000 hours, change the gear oil. *Mixer:* Inspect the mixer connections, mounting bolts, and operation. *Basket Strainer:* Clean and inspect basket strainer and seals. *Level Transmitters:* Check for mechanical damage to diaphragm, the pipe, or the supporting cable. Clean the device using a cleaning agent that will not corrode the seals and surfaces. Verify the calibration. *Laser Turbidimeters:* Sanitize the degassing equipment.

	Pressure Transmitter: Calibrate pressure transmitters per manufacturer recommended schedule. *Check All Door Intrusion Switches:* Doors, hatches, motion detectors.
As Needed	*Sodium Hypochlorite, Bisulfite, Hydroxide, and Citric Acid Pumps:* Receive sodium hypochlorite delivery.

STILLAGUAMISH RIVER WTP CLEARWELL

Quarterly	Perform quarterly inspections.
As Needed	Perform grounds maintenance.

327 ZONE RESERVOIR

Quarterly	Perform quarterly inspections.
As Needed	Perform grounds maintenance and control valve maintenance.

EDWARD SPRINGS RESERVOIR, SPRINGS, WELLS, TREATMENT PLANT

Daily	*Watershed/Grounds:* Inspect exterior fence and gates, inspect collector loop/collectors/hatches/locks, inspect building exteriors. *Old Screen House/Well Houses:* Inspect building exteriors, check pumps for unusual noise/vibration/temperature, clean screen house of floating debris. *Treatment Plant:* Inspect building exterior. Inspect building interior for damage, broken water lines, leaks, etc. Check chlorine tank, pipes, pumps for leaks. Standardize/calibrate pH probe. *Trojan UV System:* Inspect both reactors for leaks. Check for alarms on control panels. *Reservoir/Outlet Analyzers:* Inspect cover/hatches. Standardize/calibrate pH probe.
Four times per week	*Old Screen House/Well Houses:* Take fecal coliform sample from screen house.
Twice per week	*Watershed/Grounds:* Drive McRae Road (watershed perimeter).
Every five days	*Treatment Plant:* Clean wye strainer for chlorine analyzer. Verify/calibrate chlorine analyzer. *Reservoir/Outlet Analyzers:* Verify/calibrate chlorine analyzer.
Weekly	*Watershed/Grounds:* Walk outer collector loop, walk upper watershed trail. *Old Screen House/Well Houses:* Clean screen house/screens/vacuum basin floor. Verify flow diversion is at required set point.

	Treatment Plant: Verify turbidimeter. Clean turbidimeter. Clean/vacuum building. Check operations of downstairs sump pumps. Flush eyewash (notify staff prior to flushing). Check operation of SCADA mini laptop. *Trojan UV system:* Calibrate (zero)/verify UVT analyzer. Fill UVT cleaning solution 50-50 water/hypochlorite. *Reservoir/Outlet Analyzers:* Adjust pH probe temperature. Walk reservoir perimeter. Check reservoir cover pumps.
Monthly	Perform well soundings. *Treatment Plant:* Check operation of UV system high turbidity/low chlorine shutdown. Backwash basket strainer. Calibrate pH probe. Check alarms/SCADA callouts. *Trojan UV System:* Perform reference checks on UVI sensors. *Reservoir/Outlet Analyzers:* Calibrate pH probe.
Quarterly	Perform quarterly inspections. *Treatment Plant:* Rebuild/fill chlorine probe. Calibrate turbidimeter. Rotate tubing on peristaltic pumps. *Reservoir/Outlet Analyzers:* Rebuild/fill chlorine probe. Calibrate turbidimeter.
Annually	Perform well maintenance.
As Needed	Perform grounds maintenance. *Treatment Plant:* Receive sodium hypochlorite delivery.

LAKE GOODWIN WELL

Quarterly	Perform well soundings.
Annually	Perform well maintenance.
As Needed	Perform grounds maintenance and control valve maintenance.

JOA 30-INCH LINE

Quarterly	Perform quarterly inspections.
As Needed	Perform maintenance and easement maintenance.

JOA 24-INCH LINE

Quarterly	Perform quarterly inspections.
As Needed	Perform maintenance and easement maintenance.

STILLAGUAMISH TRANSMISSION LINE

Quarterly	Perform inspections.
As Needed	Perform maintenance.

OTHER COMPONENTS OF DISTRIBUTION SYSTEM

Water Mains	
Bimonthly	Flush areas with water quality concerns or frequent customer concerns.
Biannual cycle	Complete flushing of entire system.
Hydrants	
Biannual cycle	Perform hydrant maintenance. Maintain vegetation surrounding hydrants, test hydrants, check accessibility and configuration of auxiliary valve. Note hydrants in need of pressure washing or painting.
As Needed	Pressure washing and painting of hydrants.
Valves	
Biannual cycle	Exercise all valves. Report malfunctioning valves and issue maintenance work orders for repair or replacement.
PRVs	
Annually	Perform testing and preventative maintenance. Check pressures, make adjustments, clean strainers, and replace parts as necessary.
Source Meters	
Annually	Calibrate source meters.

METERS

Source meters are calibrated annually and were tested in August 2014. Customer meters are not calibrated; however, they are tested as needed based on customer or utility concerns of accuracy. The approximate installation date/age of source, reservoir, and other system meters are listed below.

Source Meters

Location	*Installation Date*	*Notes*
Highway 9 Well	1998	Installed with well.
Edward Springs Well No. 1R	2009	
Edward Springs Well No. 2	2012	
Edward Springs Well No. 3	2015	

Edward Springs Collector Wells	2013	Metered through dual UV treatment system.
Lake Goodwin Well	1970	Installed with well.
Sunnyside Well No. 1R	N/A	Not metered at this time; scheduled to be metered with construction of new Sunnyside Well WTP in 2017.
Sunnyside Well No. 2	1965	Thought to be original meter.
Stillaguamish Ranney Well	2006	No local meter. Inlet meter to Stillaguamish WTP (installed 2006) is used as meter.

Reservoir Meters

Location	*Installation Date*	*Notes*
Highway 9 Reservoir	1998	Meter on common inlet/outlet; no longer used. Probably installed with reservoir in 1998.
Edward Springs Reservoir Outlet	2005	
Edward Springs Reservoir Inlet	2004	
Sunnyside Reservoir Inlet	2007	
Sunnyside Reservoir Outlet	2007	
Cedarcrest Reservoir Inlet	2016	
Cedarcrest Reservoir Outlet	1987	Meter for flow to booster pump station installed in 1987. Flow to distribution system metered after PRVs (meter not actively read).
Getchell Reservoir Inlet	2014	Metered through control valve.
Wade Road Reservoir	2007	Single inlet/outlet meter.
327 Zone Reservoir Outlet	2008	

Tulalip Tribes Meters

Location	*Installation Date*	*Notes*
88th Street NE	Approx. 2005	

Treatment Facility Meters

Location	*Installation Date*	*Notes*
Edward Springs Water Treatment Plant	2013	Inlet meter at dual UV treatment system meters collector water. Well sources are metered individually.

Stillaguamish River Water Treatment Plant	2006	Measures flow from the Ranney Well.

Customer Meters

As of 2015, 19,528 customer water meters were equipped with STAR MTUs. Of these, 1,899 are less than 5 years old; 17,475 are 5 to 10 years old; and 154 are 10 to 15 years old. In all cases, the MTU and meter are the same age.

As of 2015, 2,154 customer water meters are equipped with Neptune AMI meter registers/radios. The water meter bodies are of unknown age range but are at least 10 years old. The meters and old registers were purchased from Snohomish PUD No. 1 in 2013. New Neptune AMI meter register/radio units were installed on the existing water meter bodies in 2015.

STAFFING

The preventive maintenance procedures, as well as the normal and emergency operations of the utility, are described in the previous sections. The hours of labor and supervisory activity required to effectively provide this ongoing maintenance and operations schedule forms the basis for determining adequate staffing levels.

CURRENT STAFF

The current staff includes supervisory personnel, technicians, maintenance workers, and office personnel engaged in operating and maintaining the water system. There are currently 17 full-time employees (8 in utility maintenance and 9 in utility construction) supporting the water system.

RECOMMENDED STAFF LEVEL

A water system is a complex assortment of equipment and parts that require both operation and maintenance. The estimated level of effort required to provide effective operation and maintenance in this document is based on a compilation of national standards, such as those provided by the American Water Works Association (AWWA), and the pro-forma standards provided by similar water systems in the Pacific Northwest.

The available hours of a person during a year are not the total hours worked. There are many hours spent in training, non-work status, and other activities that deduct from the 2,080 hours in pay status during a year. The total available hours are typically reduced to 1,540, as shown in **Table 8-3**.

Table 8-3
Annual Available Hours per Person

Time Available Per Year Per Person	
Beginning Hours Available	2,080
Less average vacation of 3 weeks per year	-120
Less average sick leave of 2 weeks per year	-80
Less holidays of 10 days per year	-80
Less average training of 40 hours per year	-40
Less average small tasks other than above of 1 hour per day	-220
Net Total Available Hours Per Year Per Person	1,540

Preventive maintenance is the work performed to keep the water system in the condition necessary to provide the expected service. Preventive maintenance needs are based on the physical composition of the water system. Each component has a preventive maintenance need that ranges from minor to significant. **Table 8-4** provides the detail of the recommended staffing level for the water system's preventive maintenance program. As shown in **Table 8-4**, approximately 8.3 full-time employees are recommended for the preventive maintenance program once the Sunnyside Well Water Treatment Facility is completed.

Table 8-4
Preventive Maintenance Staff Needed

Description	Total Units In System	Frequency (Times/Year)	Time/Unit (Hours)	Time/Year (Hours)
Preventive Maintenance				
Hydrants	3,302	0.5	0.5	826
Isolation Valves, Hydrant Valves	5,701	0.5	0.2	570
Meters	22	1	2	44
Leak Survey of Water Mains	298 miles	1	4	1,190
Flushing Water Mains	298 miles	0.5	16	2,381
Booster Pump Station	3	52	1	156
Pressure Reducing/Control Valve Stations	36	1	24	864
Water Treatment Facilities	3	260	4	3,120
Sources	10	52	4	2,080
Reservoirs	9	52	1	468
Telemetry and Control System	1	52	20	1,040
Total Hours Required				12,739
Total Full Time Staff Required	**(based on 1,540 hours per year per person)**			**8.3**

The other component of O&M staffing is operations. Operations includes all activities other than preventive maintenance, such as water meter reading and repair of broken water mains. As a system ages, many of these activities can be expected to increase. Some operations staff demands can be reduced by replacing infrastructure with more efficient technology. Each technology or equipment upgrade should be analyzed for cost effectiveness. **Table 8-5** provides the recommended staffing

level for the water system's operations program. As shown in **Table 8-5**, approximately 11.5 full-time employees are recommended for the operations program.

Table 8-5
Operations Staff Needed

Description	Total Units In System	Frequency (Times/Year)	Time/Unit (Hours)	Time/Year (Hours)
Operations				
Monitor System	25	260	0.5	3,250
False Alarm Response	1	24	2	48
Meter Reading	20,376	6	0.008	978
Groundskeeping	12	12	6	864
Inventory	1	1	40	40
Meter Repair/Replace	1	610	4	2,440
Main Breaks/Repair	1	24	48	1,152
Hydrant/Blow-off Repairs	1	200	8	1,600
Utility Locates	1	400	4	1,600
Service Connections	1	650	4	2,600
Main Connections	1	24	32	768
Water Quality Sampling	10	12	2	240
Administration	1	260	8	2,080
Total Hours Required				17,660
Total Full Time Staff Required	**(based on 1,540 hours per year per person)**			**11.5**

To achieve the level of operations and maintenance shown in **Table 8-6**, approximately 19.7 full-time personnel are required for the water system alone. The City's current available staff is lacking 3 full-time equivalents (FTE) to meet these requirements. In addition, as the water system expands in the future, additional review of staffing needs will be required. The City plans to add staff to optimize preventive maintenance and meet the additional requirements from system expansion, as the budget allows.

Table 8-6
Total Staffing Recommendation

Total Staff Recommended		
Preventive Maintenace Hours		12,739
Operations Hours		17,660
Total Hours		30,399
Total Full Time Staff Required	**(based on 1,540 hours per year per person)**	**19.7**

Figure 8-1
Public Works Organizational Chart
December 2015

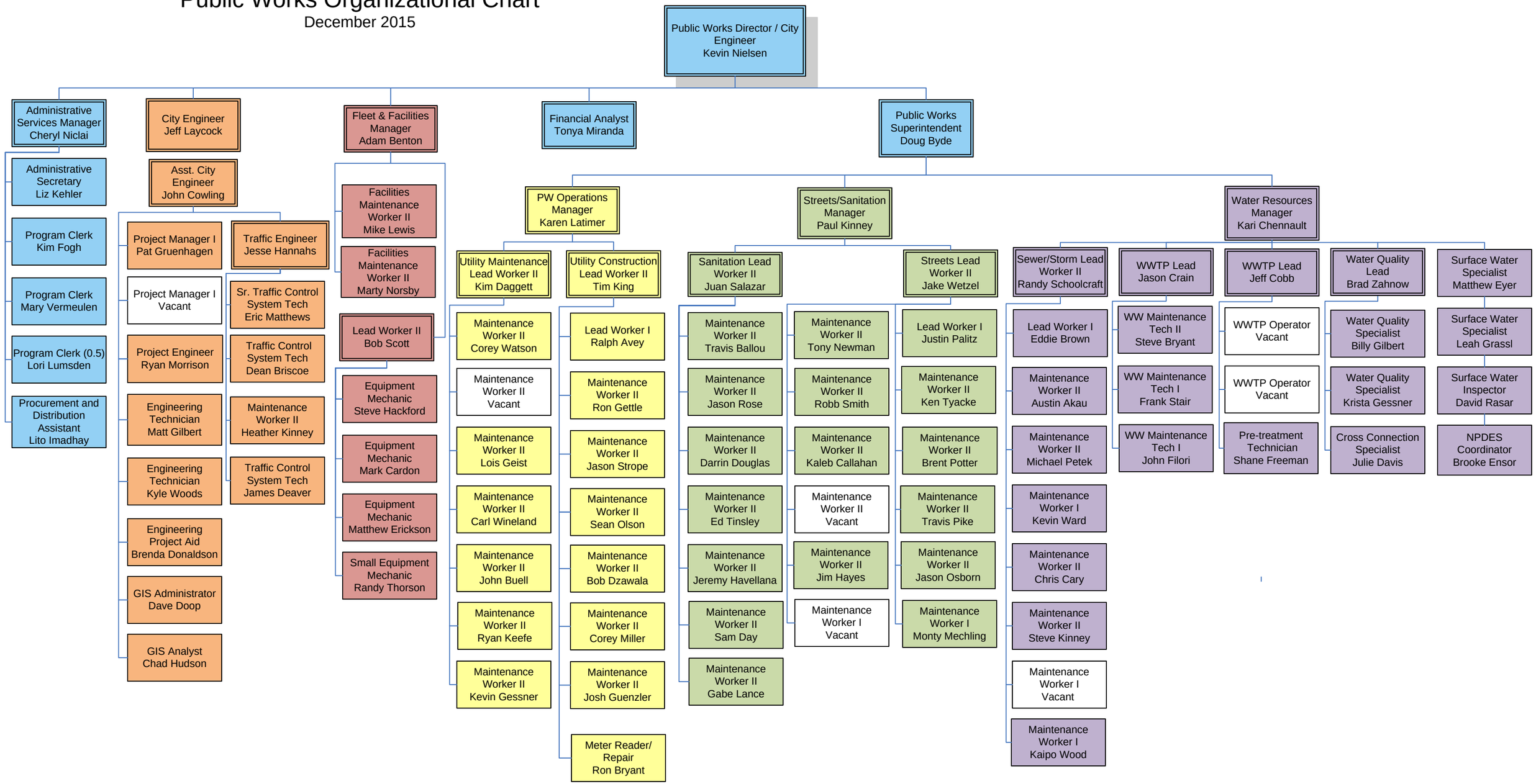

9 | WATER SYSTEM IMPROVEMENTS

INTRODUCTION

This chapter presents proposed improvements to the City's water system that are necessary to resolve existing system deficiencies and accommodate the projected growth of water customers. The water system improvements were identified from an evaluation of the results of the water system analyses presented in **Chapter 7**. The water system improvements were sized to meet both the existing and future demand conditions of the system.

A Capital Improvement Program number, herein referred to as a CIP number, has been assigned to each improvement. Numbers assigned to the improvements start at the north end of the system and generally increase incrementally to the south, as shown in **Figure 9-1A** and **Figure 9-1B**, which are plan views of the improvements. The improvements are also illustrated in the hydraulic profile of the future water system (**Figure 9-2**). The improvements are organized and presented in this chapter according to the following categories.

- Recent Improvements
- Water Main Improvements
- Pressure Zone Improvements
- Facility Improvements
- Miscellaneous Improvements

The remainder of this chapter presents a brief description of each group of improvements, the criteria for prioritization, the basis for the cost estimates, and the schedule for implementation.

DESCRIPTION OF IMPROVEMENTS

This section provides a general description of each group of improvements and an overview of the deficiencies they will resolve. Most of the improvements are necessary to resolve existing system deficiencies.

RECENT WATER SYSTEM IMPROVEMENTS

The water system has undergone several changes since 2009, when the City last updated the Capital Improvement Program of its WSP. **Table 9-1** lists the water system CIP projects that were completed since 2009.

Table 9-1
Major Improvements Completed Since 2009 WSP

Project Description	City CIP Project No.	Year Completed
JOA Flow Control Valve Relocation from Hewitt Avenue to Getchell Reservoir	N/A	2013
Whiskey Ridge Reservoir Property Purchase	W0901	
Edward Springs UV Disinfection	W1101	2014
PUD Relocate	W1102	2014
Sunnyside Well Treatment Project	W1302	Est. 2017
Utility Relocate 67th Ave	W1304	
88th & 55th Watermain Replacement	W1401	2015
Sunnyside Water System - AMR Installation	W1402	2015
PUD Water System Transition	W1404	2014
JOA Line Cathodic Protection	W1405	2015
Water System Automation Improvements	W1406	
SCADA System Improvements	W1407	2015
Upsize Cedarcrest Reservoir Flow Control Valve from 6" to 8"	N/A	2016

WATER MAIN IMPROVEMENTS

The following water main improvements were identified from the results of the distribution and transmission system analyses discussed in **Chapter 7**. Most of the water main improvements will replace existing distribution water main and are grouped in the "Annual Water Main Replacement Program" project (CIP WM1). The individual water main improvement projects within this group are numbered 1 through 544, as shown in **Figures 9-1A** and **9-1B**. The other water main improvements are mostly larger diameter water mains that function more like transmission mains than distribution mains and are identified as individual projects (CIP WM2 through WM16).

CIP WM1: Annual Water Main Replacement Program

Deficiency: Most of the water main improvements shown in **Figures 9-1A** and **9-1B** are required to resolve existing system fire flow deficiencies caused primarily by undersized water mains. Some of the water main improvements address aging water main materials, such as asbestos cement (AC) and cast iron (CI). Many areas also have known occurrences of water main leaks or breaks.

Improvement: Replace existing water main with new water main in accordance with the City's construction standards. The individual water main improvements grouped under this project are numbered 1, 2, 3, etc., as shown in **Figures 9-1A** and **9-1B**. The selection of specific projects will be accomplished annually during the City's budget development process and guided by the prioritization presented later in this chapter. This provides the City with the flexibility to coordinate these projects with other projects that may occur within the same area. An average allowance of approximately $165,000 per year has been established for the annual replacement of water mains.

CIP WM2: Replace CI Water Main in SR 531 with DI

Deficiency: The City's water main located in State Route (SR) 531 is constructed of cast iron, much of which is over 50 years old. The water main has reached its design life. Some of this water main also needs to be upsized to meet fire flow requirements.

Improvement: Replace the existing water main with new water main as follows.

- Install new 460 Zone 12-inch ductile iron water main in SR 531 from the Lake Goodwin Standpipe to the Edward Springs site, replacing existing 12-inch cast iron water main.
- Install new 460 Zone 8-inch ductile iron water main in SR 531 from the Edward Springs site to the Forty Five Road, replacing existing 6-inch cast iron water main.
- Install new 327 Zone 12-inch ductile iron water main in SR 531 from the Forty Five Road to Lakewood High School, replacing existing 6-inch and 12-inch cast iron water main.
- Install new 240 Zone 12-inch ductile iron water main in SR 531 from Lakewood High School to Spring Lane Avenue, replacing existing 8-inch and 12-inch cast iron water main.
- Install new 240 Zone 8-inch ductile iron water main in SR 531 from Spring Lane Avenue to approximately 150 feet east of Spring Lane Avenue, replacing existing 8-inch cast iron water main.
- Install new 240 Zone 12-inch ductile iron (DI) water main from Smokey Point Drive to 51st Avenue NE, replacing existing 8-inch and 12-inch cast iron water main.

CIP WM3: Replace CI and AC Water Main in Smokey Point Boulevard with DI

Deficiency: Many sections of the City's water main located in Smokey Point Boulevard are constructed of cast iron and asbestos cement that is over 50 years old. The water main has reached its design life. Some of this water main also needs to be upsized to meet fire flow requirements.

Improvement: Replace the existing water main with new water main as follows.

- Install new 240 Zone 12-inch ductile iron water main in Smokey Point Boulevard from 180th Street NE to 168th Street NE, replacing existing 8-inch, 10-inch, and 12-inch cast iron water main.
- Install new 240 Zone 8-inch ductile iron water main in Smokey Point Boulevard from 168th Street NE to 166th Place NE, replacing existing 8-inch cast iron water main.
- Install new 240 Zone 12-inch ductile iron water main in Smokey Point Boulevard from 166th Place NE to 136th Street NE, replacing existing 8-inch cast iron, 10-inch asbestos cement, 12-inch cast iron and 12-inch asbestos cement water main.
- Install new 240 Zone 12-inch ductile iron water main in Smokey Point Boulevard from 116th Street NE to approximately 97th Place NE, replacing existing 12-inch asbestos cement water main.
- Install new 170 Zone 12-inch ductile iron water main in Smokey Point Boulevard from approximately 97th Place NE to 92nd Street NE, replacing existing 12-inch asbestos cement water main.

- Install new 170 Zone 16-inch ductile iron water main in Smokey Point Boulevard from 92nd Street NE to just north of the cemetery, replacing existing 12-inch asbestos cement water main.
- Install new 170 Zone 18-inch ductile iron water main in Smokey Point Boulevard from just north of the cemetery to the cemetery, replacing existing 12-inch asbestos cement water main.
- Install new 170 Zone 12-inch ductile iron water main from the cemetery to just north of Grove Street, replacing existing 12-inch asbestos cement water main.

Between approximately 169th Place NE and 156th Street NE in Smokey Point Boulevard, a 16-inch ductile iron water main parallels the existing 8-inch and 12-inch cast iron water mains. While the cost estimates for this CIP project include the replacement of this cast iron water main with ductile iron, the feasibility of converting services currently connected to the cast iron main to the ductile iron main should be evaluated during design of this project.

CIP WM4: Replace CI Water Main in 51st Avenue NE, Armar Road, and Liberty Street (47th Avenue NE) with DI

Deficiency: Many sections of the City's water main located in 51st Avenue NE, Armar Road, and Liberty Street are constructed of cast iron that is over 50 years old. The water main has reached its design life. Some of this water main also needs to be upsized to meet fire flow requirements.

Improvement: Replace the existing water main with new water main as follows.

- Install new 240 Zone 12-inch ductile iron water main in 51st Avenue NE from SR 531 to 101st Place NE, replacing existing 12-inch cast iron water main.
- Install new 240 Zone 8-inch ductile iron water main in 51st Avenue NE from 101st Place NE to approximately 96th Place NE, replacing existing 6-inch cast iron water main.
- Install new 170 Zone 8-inch ductile iron water main in 51st Avenue NE from approximately 96th Place NE to 89th Place NE, replacing existing 6-inch cast iron water main.
- Install new 170 Zone 12-inch ductile iron water main in 51st Avenue NE from 89th Place NE to just south of 89th Place NE, replacing existing 6-inch cast iron water main.
- Install new 170 Zone 8-inch ductile iron water main in 51st Avenue NE from 84th Street NE to Grove Street, replacing existing 8-inch cast iron water main.
- Install new 170 Zone 12-inch ductile iron water main in 51st Avenue NE from Grove Street to 67th Street NE, replacing existing 8-inch cast iron water main.
- Install new 170 Zone 8-inch ductile iron water main in Armar Road and Liberty Street from 67th Street NE to 5th Street, replacing existing 8-inch cast iron water main.
- Install new 170 Zone 12-inch ductile iron water main in Liberty Street from 5th Street to 3rd Street, replacing existing 8-inch cast iron water main.
- Install new 170 Zone 16-inch ductile iron water main in Liberty Street from 3rd Street to just south of 1st Street, replacing existing 8-inch cast iron and 12-inch ductile iron water main.

CIP WM5: Replace CI Water Main in Grove Street with DI

Deficiency: Many sections of the City's water main located in Grove Street are constructed of cast iron that is over 50 years old. The water main has reached its design life. Some of this water main also needs to be upsized to meet fire flow requirements.

Improvement: Replace the existing water main with new water main as follows.

- Install new 170 Zone 8-inch ductile iron water main in Grove Street from Ash Avenue to Cedar Avenue, replacing existing 8-inch cast iron water main.
- Install new 170 Zone 12-inch ductile iron water main in Grove Street from Cedar Avenue to 67th Avenue NE, replacing existing 8-inch, 10-inch and 12-inch cast iron water main.
- Install new 240 Zone 12-inch ductile iron water main in Grove Street from 67th Avenue NE to just west of Carlson Road (71st Avenue NE), replacing existing 12-inch cast iron water main.

CIP WM6: Replace AC Water Main in Forty Five Road, 23rd Avenue NE, and 140th Street NE

Deficiency: Many sections of the City's water main located in the Forty Five Road, 23rd Avenue NE, and 140th Street NE are constructed of asbestos cement that is over 75 years old. The water main has reached its design life.

Improvement: Install new 240 Zone ductile iron water main in the Forty Five Road, 23rd Avenue NE, and 140th Street NE from 11th Avenue NE to Interstate 5 (I-5), replacing existing 10-inch and 12-inch asbestos cement water main. Design shall be based on a minimum pipe diameter of 12 inches and should evaluate providing additional capacity by upsizing the water main to a maximum diameter of 18 inches.

CIP WM7: Replace CI Water Main in 100th Street NE

Deficiency: Several sections of the City's water main located in 100th Street NE are constructed of cast iron that is over 50 years old. The water main has reached its design life.

Improvement: Replace the existing 240 Zone 10-inch and 12-inch cast iron water main with new 12-inch ductile iron water main in 100th Street NE from 55th Avenue NE to 67th Avenue NE.

CIP WM8: Replace CI Water Main in 55th Avenue NE

Deficiency: Many sections of the City's water main located in 55th Avenue NE are constructed of cast iron that is over 50 years old. The water main has reached its design life. Some of this water main also needs to be upsized to meet fire flow requirements.

Improvement: Replace the existing water main with new water main as follows.

- Install new 240 Zone 12-inch ductile iron water main in 55th Avenue NE from 100th Street NE to 95th Place NE, and approximately 60 feet up 99th Place NE, replacing existing 8-inch cast iron and 8-inch ductile iron water main.
- Install new 240 Zone 8-inch ductile iron water main in 55th Avenue NE from 95th Place NE to 92nd Place NE, replacing existing 8-inch cast iron water main.

- Install new 170 Zone 8-inch ductile iron water main in 55th Avenue NE from 92nd Place NE to 84th Street NE, replacing existing 6-inch and 8-inch cast iron water main.

CIP WM9: Replace CI Water Main in 71st Avenue NE

Deficiency: Many sections of the City's water main located in 71st Avenue NE are constructed of cast iron that is over 50 years old. The water main has reached its design life. Some of this water main also needs to be upsized to meet fire flow requirements.

Improvement: Replace the existing 10-inch cast iron and 10-inch ductile iron 240 Zone water main in 71st Avenue NE with new 12-inch ductile iron water main from south of Grove Street to just north of 67th Street NE. Replace the existing 8-inch ductile iron and 10-inch cast iron 360 Zone water main in 71st Avenue NE with new 12-inch ductile iron water main from just north of 67th Street NE to 52nd Street NE.

CIP WM10: Replace CI Water Main in Marine Drive NE and Quil Ceda Creek Casino Area

Deficiency: Much of the existing water main in Marine Drive NE and the Quil Ceda Creek Casino area is constructed of cast iron that is nearly 50 years old. The water main has reached its design life.

Improvement: Replace the existing 12-inch cast iron 170 Zone water main with new 12-inch ductile iron water main in Marine Drive NE and the Quil Ceda Creek Casino area from 21st Drive NE to I-5.

CIP WM11: Replace CI Water Main in 61st Street NE and Sunnyside Boulevard

Deficiency: Some of the existing water main in 61st Street NE and Sunnyside Boulevard is constructed of cast iron that is nearly 50 years old. The water main has reached its design life.

Improvement: Replace the existing 8-inch cast iron 170 Zone and 240 Zone water main with new 8-inch ductile iron water main in 61st Street NE and Sunnyside Boulevard from Liberty Street to just east of 59th Drive NE.

CIP WM12: Replace CI Water Main in 67th Avenue NE, 52nd Street NE, and between 52nd Street NE and Sunnyside Reservoir

Deficiency: Much of the existing water main in 67th Avenue NE, 52nd Street NE, and between 52nd Street NE and the Sunnyside Reservoir is constructed of cast iron that is nearly 50 years old. The water main is approaching or has reached its design life.

Improvement: Replace the existing water main with new water main as follows.

- Install new 240 Zone 12-inch ductile iron water main in 67th Avenue NE from 61st Street NE to 52nd Street NE, replacing existing 10-inch cast iron and 10-inch ductile iron water main.
- Install new 240 Zone 12-inch ductile iron water main in 52nd Street NE from 67th Avenue NE to 69th Avenue NE, replacing existing 10-inch cast iron water main.
- Install new 360 Zone 12-inch ductile iron water main in 52nd Street NE from 69th Avenue NE to 71st Avenue NE, replacing existing 10-inch cast iron water main.
- Install new 360 Zone 16-inch ductile iron water main in 52nd Street NE from 71st Avenue NE to 73rd Avenue NE, replacing existing 14-inch cast iron water main.

- Install new 510 Zone 16-inch ductile iron water main in 52nd Street NE from 73rd Drive NE to 74th Avenue NE, replacing existing 8-inch and 14-inch cast iron water main.
- Install new 510 Zone 8-inch ductile iron water main in 52nd Street NE from 74th Avenue NE to 75th Avenue NE, replacing existing 8-inch cast iron water main.
- Install new 360 Zone 16-inch ductile iron water main on easement from 52nd Street NE to Line Road, replacing existing 14-inch and 18-inch cast iron water main.

CIP WM13: Loop Water Main to Improve Fire Flow at Cedarcrest Golf Course

Deficiency: The existing water main at the Cedarcrest Golf Course does not provide sufficient fire flow.

Improvement: Connect the south service road water main to the existing 240 Zone 12-inch-diameter water main in Grove Street with new 12-inch ductile iron water main. Connect the service road dead-end water main to the existing 240 Zone 12-inch-diameter water main in 67th Avenue NE with 8-inch-diameter water main.

CIP WM14: Loop Water Main to Improve Fire Flow in Glenwood Mobile Estates

Deficiency: The existing water main in Glenwood Mobile Estates does not provide sufficient fire flow.

Improvement: Install new 240 Zone 12-inch ductile iron water main connecting the private dead-end Glenwood Mobile Estates water main to the existing 240 Zone 10-inch water main in 64th Street NE upstream of the 6502 64th Street NE pressure reducing valve (PRV), creating a loop.

CIP WM15: Connect Water Main in Smokey Point Boulevard to Improve Fire Flow

Deficiency: The existing water main in Smokey Point Boulevard does not provide sufficient fire flow.

Improvement: At Johnson Tracts Road, install new 16-inch ductile iron water main connecting the existing 16-inch and 8-inch water mains in Smokey Point Boulevard.

CIP WM16: Loop Water Main to Improve Fire Flow in the 48th Drive NE/Liberty Street (47th Avenue NE) Area

Deficiency: The existing water main in the 48th Drive NE/Liberty Street area does not provide sufficient fire flow.

Improvement: Install new 12-inch ductile iron water main connecting the existing dead-end water main in 48th Drive NE with the existing water main in Liberty Street, creating a loop.

Future Water Main Extensions and Replacements

All new water main extensions and replacements shall be installed in accordance with the City's Water System Standards, which are included in **Appendix I**. All new water mains shall be sized by hydraulic analysis to ensure that all pressure, flow, and velocity requirements stated in **Chapter 5** are met. In general, new water mains that will carry fire flow in residential areas shall be a minimum of 8 inches in diameter and looped for multi-family residential developments. New water mains in

commercial, business park, industrial, and school areas shall be a minimum of 12 inches in diameter and looped.

PRESSURE ZONE IMPROVEMENTS

The following pressure zone improvements will improve various low and high pressure problem areas throughout the water system. A brief description of the existing deficiency and the improvement itself is provided in the following sections.

CIP PZ1: North 240 Zone Conversion to 327 Zone

Deficiency: Areas in the North 240 Zone along the Forty Five Road have low pressures, in some cases less than the DOH minimum pressure requirement of 30 pounds per square inch (psi) under peak hour demand conditions.

Improvement: Install approximately 5,300 feet of new 8-inch ductile iron water main and 200 feet of new 12-inch ductile iron water main. Open and close valves as necessary to convert low pressure areas from the 240 Zone to the 327 Zone.

CIP PZ2: Convert to 360 Zone from 510 Zone

Deficiency: Areas west of the intersection of 81st Place NE and 77th Avenue NE in the 510 Zone have high pressures, in some cases exceeding 100 psi.

Improvement: Convert the water main in 81st Place NE between 73rd Drive NE and 77th Avenue NE to the 360 Zone from the 510 Zone by closing a valve in 81st Place NE, west of 77th Avenue NE and opening the existing closed zone valve near 73rd Drive NE.

CIP PZ3: Convert to 360 Zone from 440 Zone

Deficiency: Areas in the southwest corner of the 440 Zone have high pressures, in some cases exceeding 100 psi.

Improvement: Convert the water main in this area to the 360 Zone from the 440 Zone by opening the existing closed zone valve in 74th Drive NE, north of 67th Street NE, and closing a valve in 70th Street NE, west of 76th Drive NE.

CIP PZ4: Convert to 360 Zone from 240 Zone

Deficiency: Areas in the vicinity of the intersection of 64th Street NE and 67th Avenue NE in the 240 Zone have low pressures, in some cases less than the DOH minimum pressure requirement of 30 psi under peak hour demand conditions.

Improvement: Install approximately 600 linear feet (LF) of new 12-inch ductile iron water main in the 360 Zone to parallel the existing 240 Zone water main in 67th Avenue NE from 64th Street NE to 66th Street NE. Disconnect the water main in 66th Street NE and 64th Place NE from the existing 240 Zone water main in 67th Avenue NE and connect it to the new 360 Zone 12-inch water main. Relocate the 7000 64th Street NE PRV to the intersection of 64th Street NE and 67th Avenue NE. Remove the control valves and unnecessary piping in the existing 7000 64th Street NE PRV vault, connect water main through the existing vault, and abandon the vault.

CIP PZ5: Convert to 360 Zone from 510 Zone

Deficiency: Areas in the vicinity of the intersection of 59th Street NE and 74th Avenue NE have high pressures, in some cases exceeding 100 psi.

Improvement: Convert the area to the 360 Zone from the 510 Zone by opening the existing closed zone valves at the intersection of 74th Avenue NE and 60th Place NE, and at the intersection of 58th Street NE and 73rd Avenue NE. Close valves in 58th Place NE, southeast of 59th Street NE, and in 59th Street NE, east of 74th Avenue NE.

CIP PZ6: Convert to 285 Zone from 415 Zone

Deficiency: Areas in the vicinity of the intersection of 49th Place NE and 67th Avenue NE have high pressures, in some cases exceeding 100 psi.

Improvement: Remove the 6513 52nd Street NE PRV and install a new PRV south of the intersection of 49th Place NE and 67th Avenue NE. Remove the control valves and unnecessary piping in the existing 6513 52nd St NE PRV vault, connect water main through the existing vault, and abandon the vault.

CIP PZ7: Convert to 360 Zone from 415 Zone

Deficiency: Areas of the 415 Zone in the extreme south of the system have high pressures, in some cases exceeding 100 psi.

Improvement: Create a new isolated 360 Zone by converting the high pressure area from the 415 Zone. Add two new PRVs near the intersection of Soper Hill Road and 77th Avenue NE, and south of the intersection of 71st Avenue NE and 35th Street NE. Evaluate (and replace if necessary) a 20 LF section of 8-inch-diameter water main on 71st Avenue NE near approximately 31st Street NE that is constructed of unknown material.

CIP PZ8: Convert to 560 Zone from 510 Zone

Deficiency: Areas of the 510 Zone on the eastern edge of the system have low pressures.

Improvement: After the construction of the proposed 560 Booster Pump Station (BPS) (CIP F1), install approximately 4,300 LF of new 560 Zone 12-inch ductile iron water main to parallel the existing 510 Zone water main in 64th Street NE from just west of the Highway 9 Reservoir to 83rd Avenue NE, and in 83rd Avenue NE from 64th Street NE to Grove Street and from 71st Street NE to 75th Street NE. Convert low pressure areas to the 560 Zone from the 510 Zone by closing valves at the following locations: Grove Street/83rd Avenue NE; 70th Street NE/83rd Avenue NE; 71st Street NE/83rd Avenue NE; and 75th Street NE/83rd Avenue NE.

CIP PZ9: Convert to 510 Zone from 360 Zone

Deficiency: Areas of the 360 Zone in the vicinity of the intersection of 73rd Avenue NE and 52nd Street NE have low pressures, in some cases less than the DOH minimum pressure requirement of 30 psi under peak hour demand conditions.

Improvement: Add approximately 20 LF of new 510 Zone 12-inch ductile iron water main in the intersection of 73rd Avenue NE and 53rd Street NE to connect to existing 360 Zone water main in 53rd Street NE. Close valves and disconnect the water main in 53rd Street NE from the 360 Zone main to convert low pressure areas to the 510 Zone from the 360 Zone.

CIP PZ10: Convert to 510 Zone from 360 Zone

Deficiency: Areas of the 360 Zone in the vicinity of the intersection of 76th Avenue NE and 85th Place NE have low pressures of around 30 psi, which is the DOH minimum pressure requirement under peak hour demand conditions.

Improvement: Convert low pressure areas of the 360 Zone to the 510 Zone by installing approximately 500 LF of new 510 Zone 8-inch ductile iron water main to parallel the existing 360 Zone water main in 76th Avenue NE from 84th Street NE to 85th Street NE. Disconnect the water main in 85th Street NE from the existing 360 Zone water main in 76th Avenue NE and connect it to the new 510 Zone 8-inch water main.

CIP PZ11: Convert to 360 Zone from 415 Zone

Deficiency: Areas of the 415 Zone along 49th Street NE, west of 71st Drive NE, have high pressures in excess of 90 psi.

Improvement: Convert high pressure areas of the 415 Zone to the 360 Zone by opening the existing closed zone valve in 49th Street NE, west of 71st Drive NE, and closing a valve in 49th Street NE west of 68th Drive NE.

FACILITY IMPROVEMENTS

The following water system facility improvements were identified from the results of the water system analyses that are discussed in **Chapter 7**. The improvements are primarily necessary to resolve existing system deficiencies, but have also been sized to accommodate projected growth.

CIP F1: 560 Zone BPS and Pressure Zone Conversion

Deficiency: Areas of the 510 Zone on the east side of the water system, particularly the area in the immediate vicinity of the Highway 9 Reservoir, have low pressures that do not meet the DOH minimum pressure requirement of 30 psi under peak hour demand conditions. The Highway 9 Reservoir also has a significant amount of dead storage due to these 510 Zone high elevation services.

Improvement: Create a new 560 Pressure Zone by installing a 560 Zone BPS on the Highway 9 Reservoir site. Additionally, extend 560 Zone water service to existing low pressure customers in the vicinity of the Highway 9 Reservoir by installing approximately 500 LF of new 560 Zone 12-inch diameter water main in 64th Street NE to parallel the existing 510 Zone Highway 9 Reservoir transmission main. This project must be completed prior to or in conjunction with CIP PZ8, which will convert additional areas of the 510 Zone to the 560 Zone.

The proposed 560 Zone BPS will have a maximum capacity to satisfy the planning-level fire flow requirement and the peak hour water demand of the new 560 Zone, estimated at approximately 2,700 gallons per minute (gpm). Since the new 560 Pressure Zone will be a closed zone without water storage, the pumps should be equipped with variable frequency drives (VFDs), and a stationary emergency generator with an automatic transfer switch should be installed to maintain service in the event of a power outage. The number of pumps, their capacities, and configuration should be determined during the preliminary design phase of the project. Planning for CIP PZ8 and the extents of the new 560 Pressure Zone should also be confirmed during the preliminary design phase of this project.

CIP F2: Future Water Service Area Planning

Deficiency: Before the existing water system can be expanded into the future water service area, planning must be conducted to determine the facilities and water transmission mains that will be necessary to provide service throughout the area, which lies east of the existing water service area, generally north of 100th Street NE and east of 67th Avenue NE.

Improvement: Prepare a detailed planning study within the future water service area to determine boundaries of pressure zones, required additional source capacity, required storage, required transmission main, and approximate locations for facilities and other improvements to support development in the future water service area.

This study should be conducted concurrently with CIP F13 (Highway 9 Well Evaluation Study) and must be completed prior to CIP F3 and F5.

CIP F3: Future Water Service Area 510 Zone Reservoir

Deficiency: Development in the future water service area will increase storage requirements in Operating Area D.

Improvement: Based on the recommendations of the CIP F2 study, acquire a suitable property, and design and construct a storage tank in the 510 Zone. For planning purposes, it is assumed that the capacity of the reservoir will be 1.0 million gallons (MG). The capacity and configuration of the new reservoir should be confirmed during the predesign effort for the project.

CIP F4: Soper Hill 415 Zone Reservoir and Water Main

Deficiency: Operating Area D currently has insufficient available storage to meet the operational, equalizing, standby, and fire flow storage requirements of the pressure zones.

Improvement: Construct a 415 Zone reservoir at the recently purchased Soper Hill Reservoir site. Additionally, install approximately 2,000 LF of new 12-inch ductile iron water main to connect the reservoir to the existing 415 Zone water main in 79th Avenue NE. The minimum useful storage capacity of the reservoir should be 0.42 MG to meet the projected needs of the system through the 20-year planning period. The capacity and configuration of the new reservoir should be confirmed during the predesign effort for the project.

CIP F5: Future Water Service Area 510 Zone BPS

Deficiency: Development in the higher elevations of the future water service area will require additional pumping capacity to meet level of service requirements of the system.

Improvement: Based on the recommendations of the CIP F2 study, construct a 510 Zone BPS at the Getchell Reservoir site or another location to be determined. If located at the Getchell Reservoir site, the proposed 510 Zone BPS would allow water stored in the reservoir to be pumped to customers in the future water service area.

For planning purposes, it is assumed that the capacity of the BPS will be 2,000 gpm. The number of pumps, their capacities, and configuration should be determined during the preliminary design phase of the project.

CIP F6: Sunnyside 510 Zone BPS and Water Main

Deficiency: Operating Area D does not currently have a redundant supply source. All water is supplied to the 510 Zone, and indirectly to other pressure zones in the operating area, from the Cedarcrest BPS. If the Cedarcrest BPS was out of service, customers in Operating Area D could not be served. The 2,000 gpm that will be produced by the Sunnyside Wells and the water stored in the 3.0 MG Sunnyside Reservoir cannot be directly pumped to Operating Area D.

Improvement: Construct a 510 Zone BPS at the Sunnyside Reservoir site to provide a redundant source of supply to the 510 Zone and allow water produced by the Sunnyside Wells and stored in the Sunnyside Reservoir to be more directly used in the 510 Zone and the remainder of Operating Area D. Additionally, install approximately 4,500 LF of new 510 Zone 12-inch ductile iron water main from the proposed Sunnyside 510 Zone BPS along Line Road to the existing 510 Zone water main in 83rd Avenue NE.

The proposed Sunnyside 510 Zone BPS should be sized to provide full redundancy to the Cedarcrest BPS, which has a capacity of 2,400 gpm. The number of pumps, their capacities, and configuration should be determined during the preliminary design phase of the project.

CIP F7: Replace Lake Goodwin Standpipe

Deficiency: The Lake Goodwin Standpipe is in poor structural condition and needs to be replaced. The standpipe also has limited storage for water produced from the Lake Goodwin Well. Further, there are low pressures in the 460 Zone due to the typical operating range of the existing standpipe.

Improvement: Replace the existing Lake Goodwin Standpipe with a new reservoir. The minimum storage capacity of the reservoir should be 0.2 MG to provide additional storage for water produced by the Lake Goodwin Well and reduce the excessive well pump cycling currently experienced. The reservoir should operate at suitable hydraulic grades to resolve pressure deficiencies in the 460 Zone. The capacity and configuration of the new reservoir should be confirmed during the predesign effort for the project and consider the transfer of water to the 240 Zone from the Lake Goodwin Well via the 327 Zone with the completion of the proposed CIP F15 PRV.

CIP F8: Pilot Study/Predesign for Manganese Treatment Plant at Lake Goodwin Well

Deficiency: The Lake Goodwin Well has elevated concentrations of manganese that could lead to aesthetic customer complaints if not mitigated. Manganese is a secondary contaminant that can stain fixtures and laundry. The well screen has a history of clogging when the well is operated at the full water right capacity of 500 gpm.

Improvement: Perform a manganese treatment pilot study to determine the necessary manganese treatment process for the Lake Goodwin Well. Evaluate well rehabilitation or other improvements to enable production of 500 gpm from the well. Develop a Project Report and obtain project approval from DOH.

CIP F9: Construction of Manganese Treatment Plant at Lake Goodwin Well

Deficiency: The Lake Goodwin Well has elevated concentrations of manganese that could lead to aesthetic customer complaints if not mitigated. Manganese is a secondary contaminant that can stain fixtures and laundry. The well screen has a history of clogging when the well is operated at the full water right capacity of 500 gpm.

Improvement: Based on the recommendations of the pilot study completed under CIP F8, develop final bid documents, construct the new treatment facility, and obtain project approval from DOH for commissioning a new manganese treatment facility and other capacity improvements for the Lake Goodwin Well.

CIP F10: Pilot Study/Predesign for Arsenic Treatment Plant and Capacity Improvements at Edward Springs

Deficiency: Edward Springs consists of one spring source and three groundwater wells. There is concern of arsenic in this source, which is a chronic primary contaminant. Sources should be treated to ensure arsenic concentrations are below the maximum contaminant level of 10 parts per billion. The source water is currently below the 10 ppb MCL (average concentration is 5-6 ppb), but could be above a future limit if the standards are changed. The Edward Springs and associated wells do not have sufficient capacity to deliver their full water right amount.

Improvement: Perform an arsenic treatment pilot study for Edward Springs to determine the necessary treatment process. Evaluate improvements to the spring collector system and the wells to increase the source capacity to fully utilize the water right amount. Develop a Project Report and obtain project approval from DOH.

CIP F11: Construction of Arsenic Treatment Plant and Capacity Improvements at Edward Springs

Deficiency: Edward Springs consists of one spring source and three groundwater wells. There is concern of arsenic in this source, which is a chronic primary contaminant. Sources should be treated to ensure arsenic concentrations are below the maximum contaminant level of 10 parts per billion. The source water is currently below the 10 ppb MCL (average concentration is 5-6 ppb), but could be above a future limit if the standards are changed. The Edward Springs and associated wells do not have sufficient capacity to deliver their full water right amount.

Improvement: Based on the recommendations of the pilot study completed under CIP F10, develop final bid documents, construct the new treatment facility and other source capacity improvements, and obtain project approval from DOH for commissioning the new arsenic treatment facility for Edward Springs.

CIP F12: Reservoir Cathodic Protection

Deficiency: Divers have observed corrosion in several of the City's steel reservoirs.

Improvement: Implement cathodic protection on the City's steel reservoirs to minimize future corrosion.

CIP F13: Highway 9 Well Evaluation Study

Deficiency: The Highway 9 Well is offline due to concerns of high levels of iron, manganese arsenic, as well as a recent positive bacteriological sample and potential influence to the water levels in nearby private wells. Iron and manganese are secondary contaminants that can stain fixtures and laundry and may lead to aesthetic customer complaints if not mitigated. The well is now required to meet a CT of 6 due to the positive bacteriological sample.

Improvement: Evaluate the current condition and production potential of the Highway 9 Well and perform an iron and manganese treatment pilot study (if necessary to supplement previous pilot studies) to determine the necessary treatment process for the Highway 9 Well. Determine the

feasibility of producing water cost effectively at the Highway 9 Well to the maximum capacity of the water right.

This study should be conducted concurrently with CIP F2 (Future Water Service Area Planning).

CIP F14: Highway 9 Well Improvements

Deficiency: The Highway 9 Well is offline due to concerns of high levels of iron, manganese arsenic, as well as a recent positive bacteriological sample and potential influence to the water levels in nearby private wells. Iron and manganese are secondary contaminants that can stain fixtures and laundry and may lead to aesthetic customer complaints if not mitigated. The well is now required to meet a CT of 6 due to the positive bacteriological sample.

Improvement: If the Highway 9 Well Evaluation Study (CIP F13) identifies that water can be produced cost-effectively at the Highway 9 Well, develop a Project Report and obtain project approval from DOH for the well improvements and treatment facility. Construct improvements necessary to bring the Highway 9 Well online.

CIP F15: 327 Zone to 240 Zone PRV

Deficiency: The production capacity of the Lake Goodwin Well may be maximized by transferring water produced by the well to the 240 Zone.

Improvement: Construct a 327 Zone to 240 Zone PRV at the Edward Springs site to transfer excess supply capacity produced by the Lake Goodwin Well to lower pressure zones.

MISCELLANEOUS IMPROVEMENTS

The following improvements are planning efforts and program elements that are required to comply with various State of Washington water regulations or other miscellaneous improvements that have been identified as necessary for continued safe and reliable operation of the water system.

CIP M1: Fire Hydrant Replacement Program

Deficiency: Some of the City's fire hydrants are nearing or have reached the end of their design life and need to be replaced.

Improvement: Replace hydrants as necessary.

CIP M2: Water System Plan Update

Deficiency: WAC 246-290-100 requires that the City's WSP be updated every 6 years and submitted to the DOH for review and approval. Proposed changes to the WAC may extend the update requirement to 10 years.

Improvement: The City will update and submit its WSP every 6 years to comply with state requirements, or 10 years if the state standard is modified.

CIP M3: Water Use Efficiency Program

Deficiency: The existing water system most likely has leaks, although the calculated distribution system leakage (DSL) has consistently been negative. Several water use efficiency measures must be carried out on an ongoing basis to comply with state requirements.

Improvement: The City will continue its water main replacement program to reduce the amount of older and potentially leaking water mains. The City will also implement a comprehensive leak detection/water main repair program to further reduce the amount of DSL. A detailed program to establish standard methods for tracking non-revenue authorized consumption will be implemented. The City will perform other ongoing water use efficiency measures, including public education programs, as outlined in the Water Use Efficiency Program included in **Appendix G**. This program is not funded through the City's CIP, and is therefore not included in the CIP schedule.

CIP M4: Cross-connection Control Program

Deficiency: The City's Cross-connection Control Plan is an on-going program that needs additional development to continue to protect the water system from backflow contamination.

Improvement: The City will strive to be 100-percent compliant for high hazard backflow devices and will contact residential customers to determine if additional backflow devices are necessary. High-hazard commercial and industrial customers will also continue to be contacted to perform cross-connection evaluations. The City will carry out other cross-connection control program requirements as outlined in **Appendix H**. This program is not funded through the City's CIP, and is therefore not included in the CIP schedule.

CIP M5: Watershed Control and Wellhead Protection Program

Deficiency: The Watershed Control and Wellhead Protection Programs require periodic updates.

Improvement: The City will update the Watershed Control and the Wellhead Protection Programs in accordance with state requirements. In addition, the City will carry out other watershed control program requirements as outlined in the Watershed Control Program included in **Appendix L** and the Wellhead Protection Program included in **Appendix M**. This program is not funded through the City's CIP, and is therefore not included in the CIP schedule.

ESTIMATING COSTS OF IMPROVEMENTS

Project costs for the proposed improvements were estimated based on costs of similar, recently constructed water projects in the City and around the Puget Sound area, and are presented in 2016 dollars. The total cost estimates include the estimated construction cost of the improvement, as well as indirect costs estimated at 35 percent of the construction cost for engineering preliminary design, final design, and construction management services, permitting, legal, and administrative services. The construction cost estimates include a 10-percent contingency and sales tax of 9.1 percent.

Construction cost estimates for water main projects were determined from the water main unit costs (i.e., cost per foot length) shown in **Table 9-2** and the proposed diameter and approximate length of each improvement.

Table 9-2
Water Main Unit Costs

Water Main Diameter (inches)	Construction Cost Per Foot Length (2016 $/LF)
8	$190
12	$210
16	$230
18	$250

The unit costs for each water main size are based on estimates of all construction-related improvements, such as materials and labor for the water main installation, water services, fire hydrants, fittings, valves, connections to the existing system, trench restoration, asphalt surface restoration, other work necessary for a complete installation, contingency, and sales tax. Additional costs were added to some water main improvements to cover anticipated, increased costs related to the project location and degree of difficulty. Indirect costs are estimated at 35 percent of the water main construction cost, utilizing the construction cost per foot and the additional project related costs, and are included in the total cost for each water main project.

PRIORITIZING IMPROVEMENTS

The water system improvements were prioritized from established criteria to formulate a schedule that identifies projects with the most deficiencies and greatest need for improvement to be completed prior to projects with fewer deficiencies. A description of the criteria and method for prioritizing each category of improvements is provided in the following sections.

WATER MAIN IMPROVEMENTS

Table 9-3 lists criteria that were established for prioritizing the water main improvements. The criteria are based on the underlying deficiencies of the existing water main that will be replaced by the proposed water main improvements. The criteria are arranged in five different categories with a weight factor assigned to each category. The criteria given the most weight are the Existing Water Main Fire Flow Capability and the Existing Water Main Maintenance/Breaks categories.

The Existing Water Main Fire Flow Capability category ranks the water main improvements based on the ability of the existing water mains to provide the required fire flow, as determined from the results of the hydraulic analyses in **Chapter 7**. The Existing Water Main Maintenance/Breaks category ranks the water main improvements based on the number of reported leaks or breaks that the City currently has on record. The Existing Water Main Year of Installation category ranks the water main improvements based on the age of the existing water mains. The Existing Water Main Material category ranks the water main improvements based on the material of the existing water main. The Existing Water Main Benefit Area category ranks the water main improvements based on the size of the area that will benefit from the replacement.

Table 9-3
Water Main Improvements Priority Ranking Criteria

Points	Category	Weight Factor	Weighted Points
	Existing Water Main Maintenance/Breaks		
3	High Maintenance Requirements/High Frequency of Breaks	4	12
2	Annual Maintenance/Low Frequency of Breaks	4	8
1	No Maintenance and No History of Problems	4	4
	Existing Water Main Fire Flow Capability		
3	Available Fire Flow is 69% or Less of Required Fire Flow	4	12
2	Available Fire Flow is 70-89% of Required Fire Flow	4	8
1	Available Fire Flow is 90-100% or More of Required Fire Flow	4	4
	Existing Water Main Year of Installation		
3	Unknown or Before 1965	3	9
2	1965 - 1980	3	6
1	After 1980	3	3
	Existing Water Main Material		
3	Asbestos Cement or Unknown	2	6
2	Galvanized Iron, Steel, or Cast Iron	2	4
1	Ductile Iron or PVC	2	2
	Existing Water Main Benefit Area		
3	Large Benefit Area (i.e. transmission main)	1	3
2	Medium Benefit Area	1	2
1	Small Benefit Area (i.e. localized area)	1	1

The water main priority ranking criteria were applied to the annual water main replacement projects, which are grouped under CIP WM1. CIP 1 through 544, as shown in **Figure 9-1A** and **9-1B**, are presented in **Table 9-4** with their priority ranking.

Table 9-4
Annual Water Main Replacement Projects

No.	Priority Rank	Priority Points	Estimated Cost	Size Length (ft)	Size Diam (in) Existing	Size Diam (in) Proposed	Description In	Description From	Description To
1	M	28	$77,000	280	6	12	Lakewood HS	Loop	Loop
			$103,000	400	8	8			
			$2,003,000	7,070	8	12			
2	M	22	$68,000	240	8	12	Ryan's Rd	Gregory's Landing Ln	Dead-end
3	M	22	$124,000	440	8	12	Marjorie's Landing Ln	Ryan's Rd	Reynolds Dr
4	M	22	$47,000	170	8	12	Ryan's Rd	Gregory's Landing Ln	Dead-end
5	M	22	$45,000	160	8	12	Virginia's Ln	Gregory's Landing Ln	Dead-end
6	M	22	$49,000	180	8	12	Robert's Ln	Gregory's Landing Ln	Dead-end
7	M	28	$19,000	80	6	8	174th St NE	Spring Ln Ave, 172nd St NE	Parking Lot
			$386,000	1,370	8	12			
			$282,000	1,000	12	12			
8	M	22	$5,000	20	4	8	Spring Ln Ave	176th St NE	N of 176th St NE
9	M	22	$1,000	10	4	8	Spring Ln Ave	Spring Ln Ave	Spring Ln Ave
10	M	27	$293,000	1,040	6	12	Smokey Pt Dr, Parking Lot	SR 531	Smokey Pt Blvd
			$159,000	620	8	8			
			$764,000	2,700	8	12			
11	L	19	$452,000	1,760	6	8	180th St NE, 31st Dr NE	Smokey Pt Blvd	Smokey Pt RV Park
			$376,000	1,470	8	8			
12	L	19	$121,000	470	4	8	176th Pl NE, 179th St NE, 33rd Ave NE, 177th Pl NE	Smokey Pt Blvd	31st Dr NE
			$888,000	3,460	6	8			
			$83,000	330	8	8			
13	M	23	$75,000	290	4	8	174th Pl NE, 38th Dr NE, 175th Pl NE	Smokey Pt Blvd	Smokey Pt Blvd
			$589,000	2,300	6	8			
14	M	22	$39,000	150	6	8	179th Pl NE	39th Dr NE	Dead-end
15	L	18	$42,000	170	6	8	178th Pl NE	37th Dr NE	Dead-end
16	M	27	$1,000	10	4	8	178th Pl NE	178th Ct NE	43rd Ave NE
			$209,000	820	6	8			
17	L	19	$31,000	120	4	8	39th Dr NE	N of 175th Pl NE	Dead-end
			$115,000	450	6	8			
18	L	19	$77,000	300	4	8	176th Pl NE, 36th Dr NE, 177th Pl NE, 38th Dr NE, Totem Park Ln	Smokey Pt Blvd	178th Pl NE
			$904,000	3,530	6	8			
19	M	22	$389,000	1,380	8	12	Parking Lot	SR 531	Smokey Pt Blvd
20	M	28	$87,000	310	8	12	Private Property	Smokey Pt Blvd	Dead-end
21	M	22	$185,000	660	8	12	Private Property	SR 531	Dead-end
22	M	22	$63,000	230	8	12	Private Property	SR 531	Dead-end
23	M	22	$6,000	20	6	12	LDS Church	43rd Ave NE	Dead-end
			$143,000	510	8	12			
24	M	22	$215,000	760	8	12	Private Property	SR 531	Loop
25	M	22	$347,000	1,230	8	12	Shopping Center	Private Property	Private Property
			$1,000	10	10	12			
26	M	22	$96,000	340	4	12	Self Storage	Private Property	Private Property
			$47,000	170	8	12			
27	M	22	$76,000	270	8	12	Private Property	Private Property	Private Property
28	M	25	$149,000	530	8	12	Parking Lot	Twin Lakes Ave	Loop
29	M	22	$57,000	200	8	12	Parking Lot	169th Pl NE	Dead-end

* Priority: H = High, M = Medium, L = Low

Table 9-4
Annual Water Main Replacement Projects (continued)

No.	Priority Rank	Priority Points	Estimated Cost	Size Length (ft)	Size Diam (in) Existing	Size Diam (in) Proposed	Description In	Description From	Description To
30	M	27	$1,302,000	4,590	6	12	169th Pl NE, 25th Ave NE, Trailer Park	27th Ave NE	Trailer Park
			$114,000	400	8	12			
31	M	27	$237,000	840	12	12	27th Ave NE	SR 531	169th Pl NE
32	M	25	$1,352,000	4,770	8	12	Commercial Area	169th Pl NE	Twin Lakes Ave
33	M	23	$440,000	1,550	8	12	Twin Lakes Ave	169th Pl NE	South of Johnson Tracts Rd
34	M	27	$15,000	60	8	8	169th Pl NE	27th Ave NE	Smokey Pt Blvd
			$737,000	2,600	12	12			
35	M	24	$847,000	2,730	12	16	Twin Lakes Ave	South of Johnson Tracts Rd	156th St NE
36	M	29	$12,000	40	6	12	168th St NE	Smokey Pt Blvd	40th Ave NE
			$456,000	1,610	8	12			
37	M	22	$96,000	340	6	12	Private Property	168th St NE	Dead-end
38	M	22	$93,000	330	8	12	Private Property	168th St NE	Dead-end
39	M	21	$458,000	1,620	8	12	Private Property	166th Pl NE	168th Pl NE
40	M	21	$574,000	2,030	8	12	Private Property	166th Pl NE	168th Pl NE
41	L	18	$33,000	120	6	12	166th Pl NE	Smokey Pt Blvd	40th Ave NE
			$448,000	1,580	8	12			
42	M	22	$77,000	270	8	12	Private Property	166th Pl NE	Dead-end
43	M	22	$69,000	250	8	12	Private Property	166th Pl NE	Dead-end
44	L	18	$284,000	1,010	8	12	Private Property	166th Pl NE	Loop
45	M	22	$121,000	430	8	12	Private Property	Smokey Pt Blvd	Loop
			$148,000	520	10	12			
46	M	22	$41,000	150	8	12	Private Property	Smokey Pt Blvd	Dead-end
			$97,000	350	10	12			
47	M	22	$24,000	90	8	12	Private Property	Smokey Pt Blvd	Dead-end
			$217,000	770	10	12			
48	M	22	$25,000	90	8	12	Private Property	Smokey Pt Blvd	Dead-end
49	M	24	$84,000	300	8	12	Private Property	Smokey Pt Blvd	Dead-end
50	M	22	$450,000	1,590	8	12	Johnson Tracts Rd	Smokey Pt Blvd	Dead-end
51	M	22	$94,000	340	6	12	Private Property	Smokey Pt Blvd	Dead-end
52	M	22	$40,000	140	8	12	Private Property	156th St NE	Dead-end
53	M	27	$6,000	20	6	12	Private Property	Private Property	Dead-end
			$192,000	680	8	12			
			$1,000	10	12	12			
54	M	27	$24,000	90	6	12	Private Property	Smokey Pt Blvd	Dead-end
			$1,000	10	12	12			
55	M	22	$29,000	110	6	12	Cycle Barn	Smokey Pt Blvd	Dead-end
			$226,000	800	8	12			
56	M	22	$69,000	250	6	12	Private Property	Smokey Pt Blvd	Dead-end
57	M	22	$420,000	1,480	6	12	Private Property	152nd St NE	39th Ave NE
58	M	22	$335,000	1,180	8	12	39th Ave NE	152nd St NE	Dead-end
59	M	22	$134,000	480	8	12	Private Property	39th Ave NE	Parking Lot
60	M	22	$7,000	30	6	12	Private Property	152nd St NE	Parking Lot
			$72,000	260	8	12			
61	M	27	$131,000	460	6	12	150th Pl NE	Smokey Pt Blvd	Dead-end
62	M	22	$6,000	20	6	12	Private Property	Smokey Pt Blvd	Dead-end
			$71,000	250	8	12			
63	M	28	$16,000	60	8	12	Private Property	Smokey Pt Blvd	Dead-end

* Priority: H = High, M = Medium, L = Low

Table 9-4
Annual Water Main Replacement Projects (continued)

No.	Priority Rank	Priority Points	Estimated Cost	Size Length (ft)	Size Diam (in) Existing	Size Diam (in) Proposed	Description In	Description From	Description To
64	M	27	$6,000	20	6	12	Private Property	Smokey Pt Blvd	Dead-end
			$16,000	60	8	12			
65	M	22	$65,000	230	8	12	Private Property	Smokey Pt Blvd	Dead-end
66	M	27	$70,000	250	6	12	Private Property	Smokey Pt Blvd	Dead-end
67	M	22	$16,000	60	6	12	Private Property	152nd St NE	40th Ave NE
			$538,000	1,900	8	12			
68	M	22	$21,000	80	8	12	Private Property	40th Ave NE	Dead-end
69	H	30	$1,000	10	6	12	Private Property	40th Ave NE	Dead-end
			$145,000	510	8	12			
70	M	21	$363,000	1,280	10	12	40th Ave NE	Approx 148th St NE	Dead-end
71	L	18	$435,000	1,540	8	12	44th Ave NE/148th St NE	152nd St NE	45th Ave NE
72	L	18	$484,000	1,710	8	12	43rd Dr NE/151st Pl NE/149th St NE	44th Ave NE	44th Ave NE
73	L	18	$248,000	880	8	12	151st St NE	43rd Dr NE	45th Ave NE
74	L	18	$135,000	480	8	12	150th St NE	43rd Dr NE	44th Ave NE
75	L	18	$246,000	870	8	12	149th Pl NE	43rd Dr NE	45th Ave NE
76	L	14	$113,000	400	8	12	149th St NE	44th Ave NE	45th Ave NE
77	L	18	$172,000	610	8	12	44th Dr NE	151st St NE	149th St NE
78	L	14	$649,000	2,290	8	12	45th Ave NE/45th Dr	151st Pl NE	148th St NE
79	M	23	$968,000	3,420	6	12	Emerald Hills Estates	43rd Ave NE	144th Ave NE
			$1,112,000	3,930	8	12			
80	L	14	$362,000	1,280	8	12	49th Dr NE	144th Ave NE	148th St NE
81	M	22	$164,000	580	8	12	146th St NE	51st Ave NE	49th Dr NE
82	L	18	$336,000	1,190	8	12	50th Ave NE/146th Pl NE/50th Dr NE	146th St NE	148th St NE
83	L	18	$347,000	1,230	8	12	148th St NE	46th Ave NE	50th Dr NE
84	L	18	$338,000	1,200	8	12	46th Ave NE/46th Dr NE	148th St NE	144th Pl NE
85	M	22	$1,000	10	6	12	47th Ave NE	148th St NE	145th Pl NE
			$200,000	710	8	12			
86	M	22	$1,000	10	6	12	147th Pl NE	47th Ave NE	49th Dr NE
			$158,000	560	8	12			
87	L	18	$158,000	560	8	12	146th Pl NE	47th Ave NE	49th Dr NE
88	L	14	$203,000	720	8	12	145th Pl NE	46th Dr NE	49th Dr NE
89	M	22	$1,000	10	6	12	145th St NE	46th Dr NE	49th Dr NE
			$217,000	770	8	12			
90	M	22	$157,000	560	8	12	144th Pl NE/48th Dr NE	46th Dr NE	145th St NE
91	L	19	$130,000	510	6	8	11th Ave NW	SR 531	Dead-end
92	L	19	$94,000	370	6	8	176th Pl NE	SR 531	Dead-end
93	L	19	$154,000	600	4	8	140th Pl NE	141st Pl NE	Dead-end
			$53,000	210	6	8			
94	M	21	$64,000	250	4	8	141st Pl NE, 21st Ave NE, 142nd Pl NE, 20th Dr NE, 143rd Pl NE	23rd Ave NE	23rd Ave NE
			$431,000	1,680	6	8			
			$141,000	550	8	8			
95	L	19	$202,000	790	6	8	140th St NE	23rd Ave NE	West of 23rd Ave NE
96	M	22	$1,000	10	4	8	142nd Pl NE/26th Dr NE	26th Dr NE	Cul-de-Sac
			$97,000	380	6	8			
97	M	22	$729,000	210	4	8	29th Ave NE/140th Pl NE	140th St NE	Cul-de-Sac
			$696,000	80	6	8			

* Priority: H = High, M = Medium, L = Low

Table 9-4
Annual Water Main Replacement Projects (continued)

No.	Priority Rank	Priority Points	Estimated Cost	Size Length (ft)	Size Diam (in) Existing	Size Diam (in) Proposed	Description In	Description From	Description To
98	M	27	$11,000	40	6	12	140th St NE	Smokey Pt Blvd	Dead-end
			$279,000	990	10	12			
			$3,000	10	12	12			
99	M	27	$31,000	120	8	8	Smokey Pt Blvd	140th St NE	North of 136th St NE
			$323,000	1,140	8	12			
100	M	22	$150,000	530	8	12	Storage Facility	Smokey Pt Blvd	Dead-end
			$329,000	1,160	10	12			
101	M	22	$23,000	80	8	12	Private Property	45th Ave NE	Dead-end
102	M	22	$128,000	450	8	12	Private Property	45th Ave NE	Dead-end
103	M	22	$696,000	80	6	12	Private Property	45th Ave NE	136th St NE
			$227,000	800	8	12			
104	L	20	$598,000	1,280	8	8	136th St NE	Smokey Pt Blvd	47th Dr NE
			$1,381,000	2,490	8	12			
105	M	22	$46,000	160	8	12	Private Property	136th St NE	Dead-end
106	M	25	$14,000	50	6	12	39th Ave NE/134th St NE/45th Ave NE	136th St NE	136th St NE
			$1,042,000	3,680	8	12			
107	M	21	$219,000	780	8	12	134th St NE	Smokey Pt Blvd	39th Ave NE
108	M	25	$198,000	700	8	12	38th Ave NE	134th St NE	132nd Pl NE
109	M	22	$365,000	1,290	8	12	132nd Pl NE	Smokey Pt Blvd	Dead-end
110	M	22	$297,000	100	12	12	Smokey Pt Blvd	Smokey Pt Blvd	Smokey Pt Blvd
111	M	25	$266,000	940	8	12	36th Dr NE	132nd Pl NE	Private Property
112	M	22	$963,000	3,400	8	12	41st Ave NE/Private Property	134th St NE	Smokey Pt Blvd
113	M	27	$449,000	700	6	8	128th St NE	State Ave	43rd Ave NE
			$194,000	690	6	12			
			$17,000	60	8	12			
114	M	22	$18,000	60	6	12	State Ave	State Ave	Dead-end
115	M	22	$540,000	1,910	8	12	Zodiac Aerospace/Private Property	Private Property	Private Property
			$291,000	1,030	10	12			
116	M	23	$34,000	140	4	8	54th Dr NE	Timberbrook Dr	Cul-de-Sac
			$83,000	330	6	8			
117	M	23	$27,000	110	4	8	145th St NE	Timberbrook Dr	Cul-de-Sac
			$69,000	270	6	8			
118	M	23	$111,000	430	4	8	144th Pl NE	Timberbrook Dr	Cul-de-Sac
			$94,000	370	6	8			
119	M	23	$49,000	190	4	8	54th Dr NE	Timberbrook Dr	Cul-de-Sac
			$48,000	190	6	8			
			$1,000	10	8	8			
120	M	23	$1,844,000	1,930	8	8	Timberbrook Dr	143rd Pl NE	146th St NE
121	M	23	$38,000	150	4	8	55th Ave NE	Timberbrook Dr	147th Pl NE
			$121,000	470	6	8			
122	M	23	$50,000	200	4	8	Cul-de-Sac	Timberbrook Dr	Cul-de-Sac
123	M	23	$115,000	450	4	8	55th Dr NE/145th St NE/58th Dr NE/146th St NE	Timberbrook Dr	Timberbrook Dr
			$509,000	1,990	6	8			
124	L	19	$488,000	1,900	6	8	142nd Pl NE/58th Dr NE/143rd Pl NE	57th Ave NE	57th Ave NE
125	L	20	$1,631,000	3,730	6	8	142nd Pl NE/51st Dr NE/143rd Pl NE/55th Ave NE/57th Ave NE	51st Ave NE	141st Pl NE
126	L	18	$54,000	210	6	8	140th Pl NE	57th Ave NE	Cul-de-Sac
127	M	21	$95,000	370	6	8	139th Pl NE	49th Dr NE	Cul-de-Sac
128	L	19	$352,000	1,380	6	8	138th St NE	51st Ave NE	West of 56th Ave NE

* Priority: H = High, M = Medium, L = Low

Table 9-4
Annual Water Main Replacement Projects (continued)

No.	Priority Rank	Priority Points	Estimated Cost	Size Length (ft)	Size Diam (in) Existing	Size Diam (in) Proposed	Description In	Description From	Description To
129	L	18	$21,000	80	6	8	138th St NE	48th Dr NE	West of 48th Dr NE
130	M	21	$8,000	40	6	8	138th St NE	49th Dr NE	East of 138th St NE
131	L	18	$113,000	440	6	8	49th Dr NE/136th Pl NE	49th Dr NE	Cul-de-Sac
132	L	19	$188,000	740	6	8	47th Ave NE	136th St NE	Cul-de-Sac
133	L	19	$25,000	100	6	8	Cul-de-Sac	132nd Pl NE	Dead-end
134	L	19	$40,000	160	6	8	Cul-de-Sac	132nd Pl NE	Dead-end
135	L	19	$639,000	2,500	6	8	132nd Pl NE, 45th Ave NE, 133rd Pl NE	47th Dr NE	131st Pl NE
136	L	19	$83,000	330	2	8	46th Dr NE, 131st Pl NE, 130th Pl NE	131st Pl NE	129th Pl NE
			$860,000	3,350	6	8			
137	L	19	$96,000	380	4	8	43rd Ave NE, 129th Pl NE, 46th Dr NE, 128th Pl NE	129th Pl NE	Approx 127th St NE
			$798,000	3,110	6	8			
138	L	19	$1,041,000	1,430	6	8	47th Dr NE	136th St NE	Cul-de-Sac
139	L	19	$858,000	3,350	6	8	132nd Pl NE, 48th Ave NE, 130th Pl NE, 49th Ave NE, 50th Ave NE	51st Ave NE	51st Ave NE
140	M	24	$619,000	2,410	6	8	134th Pl NE, 133rd Pl NE, 54th Dr NE	51st Ave NE	Dead-end
			$56,000	220	8	8			
141	L	19	$279,000	1,090	6	8	135th Pl NE	47th Dr NE	51st Ave NE
142	L	19	$560,000	2,190	6	8	134th Pl NE, 133rd Pl NE	47th Dr NE	51st Ave NE
143	L	19	$52,000	200	4	8	Private Property	132nd St NE	Dead-end
			$32,000	130	6	8			
144	L	19	$154,000	600	4	8	Quil Scenic Dr, 135th Pl NE, 56th Dr NE, 55th Dr NE, 133rd Pl NE	Otter Rd	Loop
			$715,000	2,790	6	8			
145	M	23	$24,000	100	4	8	58th Dr NE, 60th Dr NE, 134th Pl NE,	Otter Rd	Loop
			$1,010,000	3,940	6	8			
146	L	18	$14,000	60	6	8	57th Ave NE	Otter Rd	Cul-de-Sac
147	L	19	$420,000	1,640	6	8	54th Dr NE/130th Pl	Otter Rd	Cul-de-Sac
148	M	23	$40,000	160	6	8	130th Pl NE	51st Ave NE	Cul-de-Sac
149	L	18	$25,000	100	6	8	Private Property	51st Ave NE	Dead-end
150	M	21	$75,000	300	6	8	47th Dr NE	48th Ave NE	Cul-de-Sac
151	M	21	$243,000	950	6	8	48th Dr NE	129th Pl NE	Cul-de-Sac
152	M	27	$89,000	350	4	8	48th Ave NE, 127th St NE	N of 127th St NE	126th Pl NE
			$256,000	1,000	6	8			
			$40,000	160	8	8			
153	L	19	$972,000	3,790	6	8	126th Pl NE, 48th Dr NE, 126th St NE, 46th Dr NE, 124th Pl NE,	126th Pl NE	123rd Pl Ne
			$48,000	190	8	8			
154	L	19	$33,000	130	4	8	Private Property	51st Ave NE	Cul-de-Sac
			$13,000	50	6	8			
155	L	19	$296,000	1,160	4	8	128th Pl NE, 54th Ave NE, 126th Pl NE, 52nd Dr NE	51st Ave NE	51st Ave NE
			$935,000	3,650	6	8			
156	L	19	$105,000	410	6	8	42nd Ave NE	128th St NE	Dead-end
157	M	21	$51,000	200	6	8	44th Ave NE	127th Pl NE	Cul-de-Sac
158	M	21	$75,000	300	6	8	126th Pl NE	43rd Ave NE	Cul-de-Sac
159	L	18	$92,000	360	6	8	125th Pl NE	43rd Ave NE	Cul-de-Sac
160	L	19	$706,000	2,760	6	8	43rd Ave NE, 125th Pl NE, 42nd Ave NE, 125th St NE, 124th Pl NE	N of 125th Pl NE	123rd Pl NE
			$55,000	220	8	8			
161	L	18	$94,000	370	6	8	125th St NE	43rd Ave NE	Cul-de-Sac
162	M	23	$11,000	40	6	8	124th Pl NE	51st Ave NE	Cul-de-Sac
163	L	18	$70,000	280	6	8	123rd Pl NE	51st Ave NE	Cul-de-Sac

* Priority: H = High, M = Medium, L = Low

Table 9-4
Annual Water Main Replacement Projects (continued)

No.	Priority Rank	Priority Points	Estimated Cost	Size Length (ft)	Size Diam (in) Existing	Size Diam (in) Proposed	Description In	Description From	Description To
164	L	19	$110,000	430	6	8	121st Pl NE	122nd Pl NE	Cul-de-Sac
165	L	20	$61,000	240	4	8	123rd Pl NE, 122nd Pl NE	43rd Dr NE	51st Ave NE
			$493,000	1,920	6	8			
			$898,000	870	8	8			
166	L	19	$393,000	1,530	6	8	123rd Pl NE, 48th Dr NE	122nd Pl NE	122nd Pl NE
167	L	19	$28,000	110	2	8	43rd Dr NE, 122nd Pl NE, 45th Ave NE, 121st Pl NE	123rd Pl NE	47th Dr NE
			$30,000	120	4	8			
			$568,000	2,220	6	8			
168	L	20	$113,000	440	4	8	47th Dr NE, 117th St NE, 116th St NE	121st Pl NE	46th Ave NE
			$780,000	3,040	6	8			
169	L	19	$282,000	1,100	6	8	121st St Ne, 52nd Ave NE	51st Ave NE	Cul-de-Sac
170	L	20	$143,000	560	8	8	58th Dr NE/121st Pl NE	120th Pl NE	Cul-de-Sac
171	L	17	$35,000	140	6	8	119th Pl NE	51st Ave NE	East of 51st Ave NE
172	M	21	$87,000	340	6	8	52nd Dr NE	119th Pl NE	Dead-end
173	L	19	$149,000	580	6	8	117th Pl NE	51st Ave NE	Cul-de-Sac
			$4,000	20	12	12			
174	L	19	$223,000	870	8	8	113th Pl NE	East of 51st Ave NE	55th Ave NE
			$31,000	110	10	12			
175	M	25	$142,000	500	8	12	124th St NE	State Ave	Dead-end
			$597,000	1,160	10	12			
176	M	26	$618,000	1,360	6	8	122nd St NE	State Ave	Approx 36th Dr NE
177	H	30	$100,000	390	6	8	120th St NE/36th Dr NE	122nd St NE	Shopping Center
			$184,000	650	6	12			
			$249,000	880	8	12			
178	H	30	$57,000	230	4	8	121st St NE	38th Ave NE	Dead-end
			$96,000	380	6	8			
179	H	30	$31,000	120	2	8	120th Pl NE, 39th Dr NE, 119th Pl NE, 40th Ave NE, 118th Pl NE	38th Ave NE	38th Ave NE
			$73,000	290	4	8			
			$541,000	2,110	6	8			
180	H	30	$357,000	1,390	6	8	38th Ave NE	Shopping Center	122nd St NE
			$15,000	60	8	12			
181	L	18	$16,000	60	8	12	Parking Lot (Winco Foods)	Parking Lot	Parking Lot
182	M	22	$99,000	350	8	12	Parking Lot	Parking Lot	Parking Lot
183	M	29	$991,000	1,760	6	8	116th St NE	Smokey Pt Blvd	Mobile Manor
			$248,000	880	8	12			
184	M	22	$10,000	40	8	12	Parking Lot	116th St NE	Parking Lot
185	M	22	$74,000	260	8	12	Private Property	Private Property	Private Property
186	M	22	$11,000	40	6	12	Private Property (Loop)	Smokey Pt Blvd	116th St NE
			$389,000	1,370	8	12			
187	L	18	$3,000	10	6	8	120th St NE	120th St NE	Cul-de-Sac
188	L	17	$89,000	320	8	12	116th St NE	Smokey Pt Blvd	Approx 44th Dr NE
189	M	23	$164,000	640	6	8	47th St NE	116th St NE	Dead-end
190	L	19	$535,000	2,090	6	8	46th Ave NE/46th Dr NE	Approx 117th St NE	54th Dr
191	L	18	$13,000	50	6	8	Cul-de-Sac	51st Ave NE	Cul-de-Sac
192	M	22	$22,000	80	6	12	Private Property (Loop)	Smokey Pt Blvd	116th St NE
			$232,000	820	8	12			

* Priority: H = High, M = Medium, L = Low

Table 9-4
Annual Water Main Replacement Projects (continued)

No.	Priority Rank	Priority Points	Estimated Cost	Size Length (ft)	Size Diam (in) Existing	Size Diam (in) Proposed	Description In	Description From	Description To
193	M	27	$36,000	140	6	8	Private Property	116th St NE	Dead-end
			$25,000	90	6	12			
194	M	27	$191,000	750	6	8	113th Pl NE	Smokey Pt Blvd	46th Ave NE
			$38,000	140	6	12			
			$155,000	550	8	12			
195	L	18	$121,000	470	6	8	44th Dr NE	113th Pl NE	Dead-end
196	L	19	$363,000	1,420	6	8	47th Ave NE	113th St NE	108th Pl NE
197	L	19	$44,000	170	4	8	47th Ave NE, 115th Pl NE, 48th Dr NE, 113th St NE	113th Pl NE	Loop
			$524,000	2,040	6	8			
198	L	19	$348,000	1,360	6	8	54th Dr/Private Property	47th Ave NE	State Ave
199	L	19	$353,000	1,380	6	8	109th Pl NE	47th Ave NE	State Ave
200	L	18	$64,000	250	6	8	54th Dr	51st Ave NE	Cul-de-Sac
201	L	18	$47,000	190	6	8	110th St NE	51st Ave NE	Cul-de-Sac
202	L	18	$99,000	390	6	8	109th St NE	51st Ave NE	Cul-de-Sac
203	L	19	$56,000	220	4	8	54th Dr	51st Ave NE	Dead-end
			$280,000	1,090	6	8			
204	M	21	$101,000	400	6	8	54th Dr NE	108th St NE	Cul-de-Sac
205	M	24	$94,000	370	8	8	108th St NE	Approx 56th Ave NE	57th Dr NE
206	M	21	$45,000	180	6	8	52nd Ave NE	107th St NE	Cul-de-Sac
207	M	21	$82,000	320	6	8	107th St NE	54th Ave NE	Cul-de-Sac
208	M	21	$69,000	270	6	8	55th Ave NE	105th St NE	Cul-de-Sac
209	M	24	$226,000	880	8	8	67th Ave NE	105th St NE	N of 101st Pl NE
210	L	18	$16,000	60	6	8	102nd St NE	51st Ave NE	Dead-end
211	M	23	$46,000	180	6	8	Shoultes Rd	103rd Pl NE	51st Ave NE
			$229,000	810	8	12			
212	L	19	$272,000	1,060	6	8	103rd Pl NE	Shoultes Rd	51st Ave NE
213	L	19	$22,000	90	4	8	49th Dr NE, 102nd Pl NE	103rd Pl NE	51st Ave NE
			$246,000	960	6	8			
214	L	18	$58,000	230	6	8	106th St NE	Shoultes Rd	Cul-de-Sac
215	L	18	$2,000	10	8	12	106th St NE	48th Dr NE	48th Dr NE
216	L	18	$137,000	490	8	12	104th Pl NE	48th Dr NE	106th St NE
217	L	17	$26,000	110	6	8	108th Pl NE	Smokey Pt Blvd	East of Smokey Pt
218	M	22	$270,000	1,060	6	8	106th Pl NE	Smokey Pt Blvd	Cul-de-Sac
219	M	22	$575,000	2,240	6	8	105th Pl NE, 104th Pl NE	State Ave	State Ave
220	M	21	$151,000	590	6	8	107th Pl NE	39th Dr NE	Cul-de-Sac
221	M	21	$120,000	470	6	8	38th Dr NE	38th Ave NE	Cul-de-Sac
222	M	21	$37,000	150	6	8	38th Ave NE	104th St NE	West of 104th St NE
223	M	23	$96,000	380	4	8	39th Dr NE, 105th Pl NE	104th St NE	North of 105th Pl NE
			$334,000	1,300	6	8			
224	M	23	$4,000	20	6	12	104th St NE/42nd Ave NE	Smokey Pt Blvd	103rd St NE, 39th Dr NE
			$390,000	430	8	12			
			$962,000	1,020	10	12			
225	L	18	$128,000	500	6	8	103rd Pl NE	Smokey Pt Blvd	Cul-de-Sac
226	L	16	$116,000	460	8	8	Shoultes Rd	100th St NE	101st Pl NE
			$56,000	200	8	12			
227	M	22	$465,000	1,810	6	8	101st Pl NE	Shoultes Rd	51st Ave NE

* Priority: H = High, M = Medium, L = Low

Table 9-4
Annual Water Main Replacement Projects (continued)

No.	Priority Rank	Priority Points	Estimated Cost	Size Length (ft)	Size Diam (in) Existing	Size Diam (in) Proposed	Description In	Description From	Description To
228	H	30	$526,000	2,050	6	8	100th St NE	Smokey Pt Blvd	51st Ave NE
			$135,000	480	6	12			
			$31,000	110	8	12			
229	M	22	$158,000	620	6	8	49th Dr NE, 98th Pl NE	100th St NE	West of 51st Ave NE
230	M	22	$50,000	180	6	12	Fred Meyer	Parking Lot	Parking Lot
			$19,000	70	10	12			
231	M	25	$112,000	400	6	12	Kmart/Cinema	Smokey Pt Blvd	Parking Lot
			$860,000	3,040	8	12			
			$10,000	40	10	12			
232	M	22	$114,000	410	8	12	Private Property	Smokey Pt Blvd	Parking Lot
233	H	32	$47,000	170	6	12	Private Property	Smokey Pt Blvd	Parking Lot
234	H	32	$33,000	120	6	12	Private Property	Smokey Pt Blvd	Parking Lot
235	L	18	$310,000	1,100	8	12	Self Storage	State Ave	95th St NE
236	H	30	$436,000	1,700	6	8	94th Pl NE	State Ave	96th St NE
			$27,000	100	6	12			
237	L	19	$473,000	1,850	6	8	47th Dr NE, 96th St NE	96th St NE	Approx 89th Pl NE
238	M	22	$465,000	1,640	8	12	Private Property	State Ave	92nd St NE
239	M	22	$152,000	540	6	12	92nd St NE	State Ave	East of State Ave
240	M	28	$1,000	10	6	12	Private Property	92nd St NE	South of 92nd St NE
			$135,000	480	8	12			
241	M	22	$474,000	1,850	6	8	46th Dr NE	88th St NE	Cul-de-Sac
242	L	19	$133,000	520	6	8	90th Pl NE	46th Dr NE	Dead-end
243	M	23	$145,000	570	6	8	50th Ave NE	Approx 95th St NE	Approx 97th St NE
244	L	18	$101,000	400	6	8	51st Ave NE/Private Property	97th St NE	South of 97th St NE
245	L	19	$1,000	10	6	8	51st Ave NE	51st Ave NE	51st Ave NE
246	L	18	$1,000	10	6	8	100th St NE	100th St NE	100th St NE
			$44,000	160	8	12			
247	L	19	$481,000	1,880	4	8	99th Pl NE, 99th St NE, 98th St NE, 97th St NE	59th Dr NE	62nd Dr NE
			$347,000	1,360	6	8			
248	L	19	$809,000	3,160	6	8	59th Dr NE, 96th St NE, 62nd Dr NE	100th St NE	100th St NE
			$38,000	150	8	8			
249	L	19	$45,000	180	4	8	64th Dr NE, 98th Pl NE, 63rd Dr NE	100th St NE	Dead-end
			$234,000	910	6	8			
250	L	14	$7,000	30	10	12	100th St NE	65th Dr NE	65th Dr NE
251	L	16	$183,000	650	12	12	67th Ave NE	100th St NE	South of 100th St NE
252	M	24	$9,000	40	6	8	100th St NE	100th St NE	100th St NE
253	M	21	$75,000	300	6	8	66th Dr NE	95th Pl NE	Cul-de-Sac
254	M	21	$112,000	440	6	8	95th Pl NE	64th Dr NE	Cul-de-Sac
255	M	21	$68,000	270	6	8	67th Ave NE/95th St NE	South of 95th St NE	66th Dr NE
256	L	19	$118,000	460	6	8	95th St NE	64th Dr NE	61st Dr NE
257	L	19	$59,000	230	4	8	62nd Dr NE	N of 95th St NE	91st St NE
			$298,000	1,160	6	8			
258	L	19	$239,000	930	6	8	61st Dr NE	95th St NE	Approx 91st St NE
259	M	28	$1,541,000	3,380	6	8	60th Dr NE	93rd Pl NE	82nd Pl NE
260	L	19	$149,000	580	6	8	83rd Pl NE	60th Dr NE	62nd Dr NE
261	L	20	$1,197,000	2,040	8	8	88th St NE	60th Dr NE	67th Ave NE
262	M	21	$23,000	90	6	8	58th Dr NE	95th St NE	Cul-de-Sac

* Priority: H = High, M = Medium, L = Low

Table 9-4
Annual Water Main Replacement Projects (continued)

No.	Priority Rank	Priority Points	Estimated Cost	Size Length (ft)	Size Diam (in) Existing	Size Diam (in) Proposed	Description In	Description From	Description To
263	M	21	$75,000	300	6	8	57th Dr NE	95th St NE	Dead-end
264	M	21	$22,000	90	6	8	55th Dr NE	95th St NE	Cul-de-Sac
265	M	21	$187,000	730	6	8	93rd Pl NE	55th Ave NE	Cul-de-Sac
266	L	19	$144,000	560	6	8	92nd St NE	55th Ave NE	Dead-end
267	M	22	$604,000	2,360	6	8	91st St NE, 52nd Dr NE, 91st Pl NE, 90th Pl NE	51st Ave NE	55th Ave NE
268	M	22	$609,000	2,380	6	8	90th St NE, 89th St NE, 52nd Dr NE	55th Ave NE	88th St NE
269	M	23	$86,000	340	4	8	91st Pl NE	55th Ave NE	57th Ave NE
			$189,000	740	6	8			
270	L	18	$94,000	370	6	8	49th Dr NE	92nd St NE	Cul-de-Sac
271	L	19	$321,000	1,250	6	8	92nd St NE	46th Dr NE	51st Ave NE
272	M	22	$202,000	790	6	8	89th Pl NE	51st Ave NE	48th Dr NE
273	M	22	$66,000	260	6	8	48th Dr NE	92nd St NE	86th Pl NE
			$384,000	1,500	8	8			
274	M	22	$111,000	430	6	8	49th Dr NE	88th St NE	86th Pl NE
275	L	18	$41,000	160	6	8	Private Property	88th St NE	North of 88th St NE
276	L	18	$7,000	30	6	8	88th St NE	88th St NE	Private Property
277	M	22	$109,000	430	6	8	52nd Ave NE	88th St NE	86th Pl NE
278	M	23	$51,000	200	4	8	45th Dr NE	84th St NE	Cul-de-Sac
			$433,000	1,690	6	8			
279	M	23	$181,000	710	6	8	44th Dr NE	88th St NE	Private Property
280	H	32	$287,000	60	6	12	State Ave	State Ave	Private Property
281	M	22	$182,000	640	8	12	Private Property	State Ave	Private Property
282	M	22	$535,000	1,890	8	12	Haggen Parking Lot	36th Ave NE	Parking Lot
283	M	22	$37,000	130	8	12	Holiday Inn Parking	Private Property	Private Property
284	L	18	$5,000	20	6	8	Grannis Ave	88th St NE	Approx 86th Pl NE
			$2,000	10	6	12			
			$172,000	560	12	16			
285	L	18	$10,000	40	6	8	88th St NE	88th St NE	88th St NE
286	M	23	$775,000	3,020	6	8	92nd Pl NE, 59th Dr NE, 93rd Pl NE	55th Ave NE	61st Dr NE
287	M	28	$107,000	380	6	12	Private Property	State Ave	Private Property
			$131,000	470	8	12			
288	H	31	$619,000	1,230	6	12	88th St NE	State Ave	51st Ave NE
			$913,000	3,560	6	8			
289	M	22	$747,000	2,910	6	8	46th Dr NE, 86th Pl NE	88th St NE	55th Ave NE
290	M	28	$41,000	150	6	12	Private Property	88th St NE	Dead-end
			$101,000	360	8	12			
291	M	28	$101,000	360	8	12	Private Property	88th St NE	Dead-end
292	M	23	$205,000	800	6	8	44th Dr NE	88th St NE	Cul-de-Sac
293	M	22	$1,000	10	6	12	Les Schwab	84th St NE	Les Schwab
			$89,000	320	8	12			
294	L	18	$188,000	670	8	12	41st Dr NE/42nd Dr NE	84th St NE	84th St NE
295	M	25	$123,000	440	6	12	Private Property	84th St NE	Dead-end
296	L	18	$93,000	360	6	8	46th Dr NE	84th St NE	85th Pl NE
			$1,000	10	8	12			
297	M	26	$9,000	40	4	8	47th Dr NE	86th Pl NE	84th St NE
			$217,000	850	8	8			
298	M	22	$275,000	1,080	6	8	85th Pl NE	47th Dr NE	51st Ave NE

* Priority: H = High, M = Medium, L = Low

Table 9-4
Annual Water Main Replacement Projects (continued)

No.	Priority Rank	Priority Points	Estimated Cost	Size Length (ft)	Size Diam (in) Existing	Size Diam (in) Proposed	Description In	Description From	Description To
299	H	30	$214,000	840	6	8	84th St NE	State Ave	55th Ave NE
			$391,000	1,380	6	12			
			$699,000	2,730	8	8			
			$2,000	10	8	12			
300	M	24	$111,000	440	6	8	52nd Dr NE	84th St NE	80th St NE
			$85,000	330	8	8			
301	M	22	$135,000	530	6	8	53rd Dr NE	84th St NE	80th St NE
			$198,000	780	8	8			
302	M	26	$60,000	240	4	8	81st St NE, 55th Ave NE	80th St NE	53rd Dr NE
			$81,000	320	6	8			
			$169,000	660	8	8			
303	M	22	$160,000	620	6	8	54th Dr NE	84th St NE	Dead-end
304	M	26	$567,000	1,160	6	8	83rd Pl NE, 55th Ave NE, 55th Dr NE	55th Ave NE	Loop
305	M	22	$574,000	1,080	8	12	Self Storage	State Ave	Self Storage
306	H	30	$258,000	1,010	6	8	81st Pl NE	State Ave	Dead-end
			$308,000	140	6	12			
307	M	22	$200,000	780	6	8	Private Property	84th St NE	80th St NE
			$269,000	950	6	12			
308	M	22	$180,000	640	8	12	Private Property	47th Ave NE	Dead-end
309	L	18	$6,000	20	6	8	47th Ave NE	47th Ave NE	Dead-end
310	M	22	$74,000	260	6	12	Private Property	47th Ave NE	Cul-de-Sac
311	M	22	$65,000	230	8	12	Private Property	80th St NE	Dead-end
312	M	22	$13,000	50	6	12	Private Property	80th St NE	Dead-end
			$113,000	400	8	12			
313	H	31	$7,000	30	4	12	80th St NE	Cedar Ave	57th Dr NE
			$1,417,000	2,900	6	8			
			$475,000	730	6	12			
			$72,000	280	8	8			
			$670,000	2,370	8	12			
314	L	19	$316,000	1,230	6	8	52nd Dr NE, 79th Pl NE	80th St NE	80th St NE
315	L	19	$81,000	320	6	8	38th Dr NE	80th St NE	Dead-end
316	H	31	$160,000	630	6	8	Westwood Crossing Apartments, Short St	80th St NE	Beach Ave
			$386,000	1,360	6	12			
317	H	33	$390,000	1,520	6	8	Cedar Ave	80th St NE	1st St
			$1,185,000	4,180	6	12			
			$362,000	1,410	8	8			
			$6,000	20	8	12			
318	H	31	$59,000	230	6	8	Beach Ave	Dead End	1st St
			$986,000	3,480	6	12			
			$587,000	2,290	8	8			
			$114,000	410	8	12			
319	H	32	$2,000	10	6	12	Private Property	Cedar Ave	Dead-end
			$81,000	290	8	12			
320	M	22	$63,000	220	6	12	Private Property	Cedar Ave	Dead-end
321	M	27	$29,000	120	6	8	Wildwood St/Woodgate Ave	Cedar Ave	Dead-end
			$137,000	490	6	12			
322	M	22	$68,000	240	6	12	Private Property	Cedar Ave	Dead-end
323	M	22	$73,000	260	8	12	Private Property	Cedar Ave	Dead-end

* Priority: H = High, M = Medium, L = Low

Table 9-4
Annual Water Main Replacement Projects (continued)

No.	Priority Rank	Priority Points	Estimated Cost	Size Length (ft)	Size Diam (in) Existing	Size Diam (in) Proposed	Description In	Description From	Description To
324	M	28	$325,000	1,270	6	8	Ash Ave	Dead End	5th St
			$100,000	350	6	12			
			$799,000	2,820	8	12			
325	L	20	$141,000	500	8	12	Private Property	Ash Ave	Beach Ave
326	M	27	$103,000	370	6	12	Businesses West of I-5	Ash Ave	West of I-5
			$333,000	1,180	8	12			
327	M	24	$44,000	160	8	12	Private Property	Beach Ave	Dead-end
328	H	30	$113,000	440	6	8	10th St	Ash Ave	Beach Ave
			$2,000	10	6	12			
329	H	30	$108,000	430	6	8	Steele St	Ash Ave	State Ave
			$4,000	20	6	12			
			$582,000	1,220	8	8			
330	H	30	$111,000	430	6	8	8th St	Ash Ave	Cedar Ave
			$2,000	10	6	12			
			$98,000	380	8	8			
			$10,000	40	8	12			
331	H	30	$93,000	360	6	8	6th St	Ash Ave	Cedar Ave
			$124,000	440	6	12			
332	H	31	$289,000	70	4	12	5th St	Ash Ave	Alder Ave
			$412,000	1,610	6	8			
			$222,000	790	6	12			
333	L	17	$135,000	530	6	8	20th Dr NE	Marine Dr NE	65th St NE
334	L	19	$662,000	2,580	6	8	21st Dr NE	Marine Dr NE	Dead-end
335	L	19	$672,000	2,620	6	8	22nd Dr NE, Sturgeon Dr	Marine Dr NE	21st Dr NE
336	L	19	$99,000	390	6	8	67th Pl NE	22nd Dr NE	21st Dr NE
337	L	19	$103,000	400	4	8	19th Dr NE, 71st St NE	20th Dr NE	21st Dr NE
			$168,000	660	6	8			
			$330,000	1,290	8	8			
338	M	21	$70,000	250	6	12	Marine Dr NE	33rd Ave NE	64th St NE
			$216,000	770	8	12			
339	M	22	$60,000	210	6	12	Private Property	33rd Ave NE	Parking Lot
			$67,000	240	8	12			
340	M	22	$91,000	320	8	12	Roy Robinson	66th St NE	Parking Lot
341	M	22	$228,000	810	8	12	66th St NE/35th Ave NE	33rd Ave NE	Approx 10th St
342	M	22	$353,000	1,250	6	12	Private Property	Marine Dr NE	Marine Dr NE
343	L	18	$326,000	1,150	10	12	B/E Aerospace	Marine Dr NE	Parking Lot
344	M	22	$189,000	670	8	12	31st Ave NE	Marine Dr NE	60th Pl NE
			$391,000	1,380	10	12			
345	M	22	$38,000	140	6	12	62nd Pl NE/29th Dr NE	31st Ave NE	Dead-end
			$95,000	340	8	12			
			$213,000	750	10	12			
346	H	30	$89,000	350	6	8	3rd St	Cedar Ave	Ash Ave
			$67,000	240	6	12			
347	L	19	$90,000	350	6	8	Ash Ave	3rd St	1st St
			$99,000	350	6	12			

* Priority: H = High, M = Medium, L = Low

Table 9-4
Annual Water Main Replacement Projects (continued)

No.	Priority Rank	Priority Points	Estimated Cost	Size Length (ft)	Size Diam (in) Existing	Size Diam (in) Proposed	Description In	Description From	Description To
348	H	30	$27,000	110	4	8	2nd St	Ash Ave	RR Tracks
			$138,000	540	6	8			
			$18,000	60	6	12			
			$8,000	30	6	16			
349	M	22	$378,000	420	8	8	1st St	Ash Ave	RR Tracks
			$59,000	210	8	12			
350	H	31	$387,000	1,370	6	12	Marysville Town Center	4th St	1st St
			$871,000	1,170	8	12			
			$97,000	340	12	12			
351	M	27	$190,000	740	8	8	1st St	RR tracks	Alder Ave
			$254,000	900	8	12			
352	L	19	$424,000	1,500	12	12	State Ave	1st St	S side of bridge
353	M	27	$15,000	50	6	12	Ebey Waterfront Park	1st St	Ebey Waterfront Park
			$197,000	700	8	12			
			$27,000	100	10	12			
354	M	24	$232,000	820	6	12	78th Pl NE	State Ave	Dead-end
355	M	23	$177,000	690	8	8	Private Property	State Ave	76th St NE
			$136,000	480	8	12			
356	M	22	$21,000	80	6	12	Private Property	80th St NE	78th Pl NE
			$120,000	430	8	12			
357	L	19	$466,000	1,650	8	12	44th Ave NE	76th St NE	80th St NE
358	M	25	$94,000	330	8	12	Private Property	76th St NE	Dead-end
359	M	22	$54,000	190	8	12	Private Property	State Ave	Parking Lot
360	M	22	$54,000	190	8	12	Private Property	State Ave	Parking Lot
361	H	30	$49,000	180	6	12	Shopping Center	State Ave	Parking Lot
			$36,000	130	8	12			
362	M	24	$297,000	1,050	8	12	Shopping Center	State Ave	43rd Ave NE
			$12,000	50	10	12			
363	H	30	$65,000	230	6	12	Shopping Center	Grove St	Parking Lot
364	H	32	$54,000	190	6	12	Shopping Center	43rd Ave NE	Parking Lot
365	M	27	$13,000	50	4	12	43rd Ave NE/Alder Ave	76th St NE	8th St
			$531,000	2,070	6	8			
			$91,000	320	6	12			
			$283,000	1,000	8	12			
366	H	33	$430,000	1,680	8	8	76th St NE	State Ave	47th Ave NE
			$164,000	580	8	12			
			$5,000	20	8	16			
367	H	31	$55,000	200	6	12	44th Ave NE	76th St NE	Grove St
			$104,000	340	6	16			
			$381,000	1,350	8	12			
368	M	22	$47,000	170	8	12	Private Property	80th St NE	Private Property
369	H	39	$400,000	1,410	6	12	47th Ave NE	84th St NE	Grove St
			$540,000	2,110	8	8			
			$143,000	510	8	12			
370	H	31	$239,000	930	6	8	50th Dr NE/49th Dr NE	80th St NE	75th Pl NE
			$168,000	600	6	12			
371	L	18	$5,000	20	6	8	51st Ave NE	51st Ave NE	Private Property

* Priority: H = High, M = Medium, L = Low

Table 9-4
Annual Water Main Replacement Projects (continued)

No.	Priority Rank	Priority Points	Estimated Cost	Size Length (ft)	Size Diam (in) Existing	Size Diam (in) Proposed	Description In	Description From	Description To
372	M	26	$4,000	20	6	8	51st Ave NE	51st Ave NE	Private Property
			$1,000	10	8	8			
373	M	27	$53,000	210	6	8	76th St NE Loop	75th Pl NE	76th St NE
			$601,000	2,120	6	12			
			$9,000	40	8	8			
			$4,000	20	8	12			
374	M	26	$6,000	30	4	8	75th Pl NE	48th Dr NE	51st Ave NE
			$219,000	860	6	8			
375	M	24	$1,000	10	6	12	Private Property	47th Ave NE	76th St NE
			$35,000	120	8	12			
376	M	28	$63,000	220	8	12	Private Property	47th Ave NE	Private Property
377	M	28	$41,000	150	8	12	Private Property	47th Ave NE	Private Property
378	L	18	$154,000	600	6	8	77th Pl NE	51st Ave NE	Dead-end
379	H	30	$631,000	2,460	6	8	74th Pl NE, 75th St NE	55th Dr	Dead-end
			$211,000	750	6	12			
380	H	30	$288,000	1,120	6	8	73rd Pl NE	51st Ave NE	Dead-end
			$111,000	400	6	12			
381	M	22	$221,000	860	6	8	72nd Pl NE	48th Dr NE	51st Ave NE
			$1,000	10	6	12			
382	M	22	$83,000	290	8	12	Private Property	Grove St	Parking Lot
383	M	22	$80,000	280	8	12	Private Property	Grove St	Parking Lot
384	H	31	$102,000	400	6	8	Kimberly Ln/Liberty Ln	Alder Ave	Liberty St
			$456,000	1,610	6	12			
385	M	22	$107,000	380	8	12	Liberty St	North of Liberty Ln	South of Liberty Ln
386	H	31	$156,000	610	6	8	Columbia Ave	Grove St	9th St
			$237,000	840	6	12			
			$98,000	350	8	12			
387	M	22	$54,000	190	6	12	Private Property	State Ave	Parking Lot
			$10,000	40	8	12			
388	M	22	$133,000	470	8	12	Private Property	State Ave	Parking Lot
389	M	22	$85,000	300	8	12	Private Property	State Ave	Parking Lot
390	M	22	$61,000	220	8	12	Private Property	State Ave	Parking Lot
391	H	30	$559,000	2,180	6	8	10th St	Liberty St	State Ave
			$31,000	110	8	12			
392	M	22	$167,000	650	6	8	Quinn Ave	10th St	9th St
393	M	22	$168,000	660	6	8	Union Ave	10th St	9th St
394	H	31	$560,000	2,190	6	8	9th St	Liberty St	State Ave
			$8,000	30	6	12			
			$30,000	110	8	12			
395	H	39	$73,000	290	6	8	Delta Ave	Steele St	4th St
			$32,000	120	6	12			
			$264,000	940	12	12			
			$99,000	320	12	16			
396	H	31	$648,000	2,530	6	8	8th St	State Ave	Liberty St
			$2,000	10	6	12			
			$41,000	150	8	12			
397	M	23	$568,000	2,220	6	8	7th St	State Ave	Liberty St

* Priority: H = High, M = Medium, L = Low

Table 9-4
Annual Water Main Replacement Projects (continued)

No.	Priority Rank	Priority Points	Estimated Cost	Size Length (ft)	Size Diam (in) Existing	Size Diam (in) Proposed	Description In	Description From	Description To
398	M	22	$250,000	980	6	8	Alder Ave	7th St	4th St
399	M	25	$86,000	340	4	8	Quinn Ave	8th St	4th St
			$250,000	980	6	8			
400	M	22	$90,000	350	8	8	Liberty St	7th St	6th St
401	M	22	$210,000	820	6	8	6th St	Quinn Ave	Liberty St
			$11,000	50	8	8			
402	M	22	$224,000	870	6	8	5th St	Quinn Ave	Liberty St
403	H	30	$122,000	480	6	8	6th St	Delta Ave	Alder Ave
			$114,000	400	6	12			
			$20,000	70	8	12			
			$100,000	360	12	12			
404	M	22	$54,000	190	6	12	Private Property	Grove St	Dead-end
405	H	31	$171,000	670	6	8	Marysville Middle School	Grove St	Liberty St
			$480,000	1,700	6	12			
406	L	14	$35,000	130	8	12	Liberty St	North of 10th St	South of 10th St
407	L	18	$41,000	160	6	8	Private Property	Grove St	Private Property
408	M	21	$69,000	270	6	8	Jennings Barn Parking	51st Ave NE	Parking Lot
409	M	22	$42,000	150	6	12	Parking Lot	51st Ave NE	Private Property
410	H	30	$306,000	1,080	6	12	67th St NE	Liberty St	Armar Rd
			$137,000	490	8	12			
411	L	19	$288,000	1,130	6	8	50th Dr NE, 65th St NE, 49th Dr NE	Armar Rd	Dead End
412	L	14	$45,000	160	8	12	Liberty St	North of 67th St NE	67th St NE
413	M	22	$55,000	200	6	12	Private Property	Liberty St	Private Property
414	M	21	$31,000	120	6	8	Private Property	49th Dr NE	Private Property
415	M	22	$94,000	330	8	12	Private Property	Liberty St	Private Property
416	H	31	$129,000	510	6	8	4th St	State Ave	Liberty St
			$525,000	1,850	6	12			
417	L	18	$3,000	10	8	12	4th St	Liberty St	Liberty St
418	H	31	$458,000	1,790	6	8	3rd St	State Ave	Liberty St
			$148,000	520	6	12			
419	H	31	$211,000	750	6	12	2nd St	State Ave	Liberty St
			$82,000	320	8	8			
			$333,000	1,180	8	12			
420	L	19	$49,000	200	6	8	Quinn Ave	2nd St	1st St
421	H	30	$48,000	190	6	8	Union Ave	2nd St	1st St
			$1,000	10	6	12			
422	L	14	$270,000	950	8	12	1st St	Quinn Ave	Liberty St
423	M	25	$78,000	280	8	12	Quinn Ave	1st St	Dead-end
424	H	30	$266,000	940	8	12	56th Pl NE/48th Dr NE/Private Property	Liberty St	Liberty St
425	H	31	$1,148,000	4,050	8	12	Columbia Ave	1st St	South of River
426	M	26	$49,000	200	8	8	Alder Ave/Public Works	2nd St	Columbia Ave
			$298,000	1,050	8	12			
427	M	22	$111,000	430	4	8	85th Pl NE	West of 55th Ave NE	East of 55th Ave NE
			$211,000	820	6	8			
428	L	18	$7,000	30	6	8	Dead-end	88th St NE	Dead-end
429	M	22	$64,000	250	6	8	84th Pl NE	55th Ave NE	Cul-de-Sac
430	M	21	$149,000	580	6	8	55th Ave NE	84th St NE	Dead-end

* Priority: H = High, M = Medium, L = Low

Table 9-4
Annual Water Main Replacement Projects (continued)

No.	Priority Rank	Priority Points	Estimated Cost	Size Length (ft)	Size Diam (in) Existing	Size Diam (in) Proposed	Description In	Description From	Description To
431	M	26	$382,000	1,490	6	8	57th Dr NE, 59th Ave NE	80th St NE	Approx 80th St NE
432	L	19	$245,000	960	6	8	59th Dr NE, 85th St NE	60th Dr NE	59th Dr NE
433	M	23	$215,000	840	6	8	86th St NE	60th Dr NE	Dead-end
434	M	23	$45,000	180	4	8	87th St NE	86th St NE	Dead-end
			$161,000	630	6	8			
435	M	23	$33,000	130	2	8	61st Dr NE	86th St NE	84th Pl NE
			$80,000	310	4	8			
			$120,000	470	6	8			
436	L	18	$81,000	320	6	8	Driveway	88th St NE	88th Pl NE
437	L	19	$26,000	100	4	8	88th Pl NE, 69th Dr NE, 89th Pl NE	67th Ave NE	Loop
			$1,991,000	2,500	6	8			
438	M	27	$101,000	360	12	12	67th Ave NE	N of 88th Pl NE	S of 88th Pl NE
439	L	14	$15,000	50	8	12	Cedarcrest Middle School	88th St NE	Cedarcrest Middle School
			$14,000	50	10	12			
440	M	22	$4,000	20	6	12	Cedarcrest Landing Apartments	88th St NE	67th Ave NE
			$328,000	1,160	8	12			
441	L	18	$147,000	480	12	16	67th Ave NE	84th St NE	Approx 86th St NE
442	M	28	$41,000	150	8	12	Cedarcrest Golf	84th St NE	Parking Lot
443	L	18	$37,000	150	6	8	82nd Pl NE	60th Dr NE	Cul-de-Sac
444	L	18	$115,000	450	6	8	81st Pl NE	60th Dr NE	Cul-de-Sac
445	L	18	$56,000	220	6	8	60th Dr NE	60th Dr NE	Cul-de-Sac
446	M	22	$2,000	10	6	8	79th Pl NE	60th Dr NE	Dead-end
447	M	22	$203,000	800	6	8	80th St NE	60th Dr NE	Greenbelt
448	L	19	$103,000	400	6	8	76th St NE	55th Dr	Dead-end
449	L	19	$261,000	1,020	6	8	76th Pl NE	East of 51st Ave NE	55th Dr
450	M	22	$506,000	1,980	6	8	55th Dr, 74th St NE	76th Pl	S of 73rd St NE
451	L	19	$165,000	640	6	8	73rd St NE	53rd Ave NE	Dead-end
452	M	22	$66,000	260	6	8	57th Dr NE	75th Pl NE	Dead-end
453	H	31	$725,000	2,830	6	8	59th Ave NE, 75th Pl NE, 57th Dr NE, 56th Dr NE	Grove St	80th St NE
			$0	0	6	12			
454	M	22	$272,000	1,060	6	8	57th Dr NE, 78th Pl NE	56th Dr NE	59th Ave NE
455	M	24	$160,000	630	8	8	59th Ave NE	S of 78th Pl NE	75th Pl NE
456	M	22	$11,000	40	8	12	59th Dr NE	Grove St	Dead-end
457	M	22	$7,000	30	8	12	Driveway	Grove St	Dead-end
458	H	30	$305,000	1,190	6	8	60th Dr NE	Grove St	N of 80th St NE
			$47,000	170	6	12			
			$1,000	10	8	12			
459	H	30	$2,000	10	4	12	74th St NE/Library	Grove St	Grove St
			$266,000	1,040	6	8			
			$290,000	1,030	6	12			
460	M	23	$5,000	20	6	8	Grove St	Grove St	Grove St
461	L	18	$27,000	110	6	8	Grove Elementary	64th Ave NE	Grove Elementary
462	L	18	$8,000	40	6	8	Dead-end	73rd Pl NE	Dead-end
463	M	23	$70,000	280	4	8	57th Dr NE, 58th Dr NE, Parkside Dr	S of 70th St NE	Cul-de-Sac
			$1,063,000	1,510	6	8			
			$31,000	120	8	8			

* Priority: H = High, M = Medium, L = Low

Table 9-4
Annual Water Main Replacement Projects (continued)

No.	Priority Rank	Priority Points	Estimated Cost	Size Length (ft)	Size Diam (in) Existing	Size Diam (in) Proposed	Description In	Description From	Description To
464	L	20	$1,346,000	2,620	6	8	55th Ave NE, 70th St NE, 58th Dr NE	Grove St	59th Dr NE
465	L	18	$121,000	470	6	8	59th Dr NE	70th St NE	Cul-de-Sac
466	L	18	$139,000	540	6	8	59th Dr NE	70th St NE	Cul-de-Sac
467	L	18	$156,000	610	6	8	61st Dr NE	70th St NE	Cul-de-Sac
468	L	18	$136,000	530	6	8	62nd Dr NE	70th St NE	Cul-de-Sac
469	L	18	$80,000	310	6	8	62nd Dr NE	70th St NE	Cul-de-Sac
470	M	22	$33,000	130	4	8	70th Pl NE	64th Ave NE	Cul-de-Sac
471	M	23	$197,000	770	6	8	67th Ave NE	76th St NE	73rd St NE
472	M	26	$442,000	1,720	6	8	77th Pl NE, 63rd Dr NE	67th Ave NE	Grove St
473	M	28	$396,000	1,550	6	8	73rd St NE	67th Ave NE	71st Ave NE
474	L	14	$1,000	10	6	8	66th Ave NE	73rd St NE	73rd St NE
475	M	23	$318,000	1,240	6	8	68th Ave NE	76th St NE	73rd St NE
476	L	19	$320,000	1,250	6	8	69th Ave NE	76th St NE	73rd St NE
477	M	22	$14,000	60	4	8	72nd Dr NE	Grove St	Cul-de-Sac
478	M	22	$131,000	470	10	12	Private Property	Grove St	71st Ave NE
479	L	18	$202,000	790	6	8	69th St NE	67th Ave NE	64th Dr NE
480	L	18	$108,000	420	6	8	64th Dr NE/68th Dr NE	67th Pl NE	Cul-de-Sac
481	L	18	$103,000	400	6	8	67th Dr NE	72nd St NE	Cul-de-Sac
482	L	18	$48,000	190	6	8	70th Ave NE	71st St NE	Cul-de-Sac
483	M	22	$20,000	80	4	8	67th Pl NE	West of 69th Dr NE	East of 69th Dr NE
484	L	18	$13,000	50	6	8	69th Pl NE	71st Ave NE	Cul-de-Sac
485	M	22	$20,000	80	4	8	67th St NE	72nd Dr NE	West of 72nd Dr NE
486 [1]	H	16	$366,000	1,180	12	16	Grove St/Cedarcrest Res Site	69th St NE	Cedarcrest Reservoir
487	M	22	$1,000	10	4	8	77th Dr NE	73rd Pl NE	Cul-de-Sac
488	L	18	$20,000	80	6	8	69th St NE	W of 83rd Ave NE	Cul-de-Sac
489	L	18	$434,000	1,690	6	8	85th Ave NE/82nd St NE/86th Ave NE	82nd St NE	Loop
490	L	18	$1,000	10	4	8	80th Ave NE	80th Ave NE	80th Ave NE
491	L	20	$54,000	210	6	8	56th Dr NE/Marysville United Methodist Church	64th St NE	Marysville United Methodist Church
492	M	21	$30,000	120	6	8	57th Dr NE	57th Ave NE	Cul-de-Sac
493	L	14	$1,000	10	6	8	60th Dr NE	Allen Creek	Allen Creek
494	M	23	$1,000	10	6	12	64th St NE	67th Ave NE	Glenwood Mobile Estates
			$636,000	2,250	8	12			
495	M	26	$504,000	1,780	8	12	Private Property	67th Ave NE	64th St NE
496	L	17	$14,000	50	10	12	64th St NE	67th Ave NE	E of 64th St NE
497	M	22	$151,000	540	10	12	67th Ave NE	N of 62nd Pl NE	61st St NE
498	M	22	$85,000	280	8	16	Cul-de-Sac	67th Ave NE	Cul-de-Sac
499	M	21	$231,000	900	6	8	61st St NE	67th Ave NE	Cul-de-Sac
500	L	18	$12,000	50	6	8	61st Pl NE	67th Ave NE	East of 67th Ave NE
501	M	22	$170,000	670	8	8	Sunnyside Blvd	West of 60th Dr NE	56th Pl NE
502	M	23	$1,145,000	1,840	8	8	56th Pl NE	Sunnyside Blvd	67th Ave NE
503	L	16	$1,000	10	8	8	55th Pl NE	64th Ave NE	64th Ave NE
504	M	26	$1,326,000	2,540	6	8	60th Dr NE/60th Pl NE	Sunnyside Blvd	67th Ave NE
505	M	23	$27,000	110	4	8	60th Dr NE/56th Pl NE/66th Ave NE	60th Dr NE	60th Pl NE
			$1,457,000	3,050	6	8			
506	M	23	$345,000	1,350	6	8	59th St NE	56th Pl NE	63rd Ave NE
507	M	27	$55,000	220	6	8	58th St NE	63rd Ave NE	Cul-de-Sac
508	L	19	$264,000	1,030	6	8	63rd Ave NE	60th Pl NE	56th Pl NE

* Priority: H = High, M = Medium, L = Low
1 = This CIP project was manually assigned a high priority due to consistent high velocities.

Table 9-4
Annual Water Main Replacement Projects (continued)

No.	Priority Rank	Priority Points	Estimated Cost	Size Length (ft)	Size Diam (in) Existing	Size Diam (in) Proposed	Description In	Description From	Description To
509	M	23	$301,000	1,180	6	8	64th Ave NE	60th Pl NE	56th Pl NE
510	M	23	$72,000	280	4	8	58th St NE, 65th Dr NE	64th Ave NE	66th Ave NE
			$227,000	890	6	8			
511	M	27	$118,000	460	6	8	57th Pl NE	64th Ave NE	Cul-de-Sac
512	L	18	$249,000	970	6	8	62nd Pl NE	67th Ave NE	Dead-end
513	L	14	$67,000	240	10	12	64th St NE	71st Ave NE	West of 71st Ave NE
514	M	23	$336,000	1,310	6	8	61st Pl NE	67th Ave NE	71st Dr NE
515	M	22	$10,000	40	4	8	74th Dr NE	58th Pl NE	Cul-de-Sac
516	M	24	$734,000	230	4	8	73rd Dr NE	57th St NE	Cul-de-Sac
517	L	18	$70,000	280	6	8	Church of the Nazarene	Church of the Nazarene	Church of the Nazarene
518	L	16	$400,000	1,290	12	16	83rd Ave NE	64th St NE	60th St NE
519	M	22	$83,000	330	4	8	50th St NE	50th St NE	Cul-de-Sac
520	M	22	$60,000	240	4	8	36th Pl NE	Cul-de-Sac	Cul-de-Sac
521	H	33	$429,000	1,680	4	8	40th St NE	Sunnyside Blvd	West of 68th Dr NE
			$22,000	90	8	8			
522	M	22	$37,000	150	4	8	67th Dr NE	49th St NE	Cul-de-Sac
523	M	28	$4,000	20	8	8	49th St NE	67th Ave NE	67th Ave NE
524	M	29	$166,000	650	6	8	Line Rd	67th Ave NE	East of 67th Ave NE
			$28,000	110	8	8			
525	L	18	$220,000	860	6	8	70th Ave NE/46th St NE	44th St NE	71st Dr NE
526	L	19	$339,000	1,330	6	8	73rd Dr NE	52nd St NE	Dead-end
527	H	38	$1,422,000	2,640	6	12	Sunnyside Blvd	50th Dr NE	42nd St NE
528	H	30	$158,000	560	6	12	Sunnyside Blvd	Approx 41st St NE	North of 38th Pl NE
529	H	34	$109,000	390	6	12	Sunnyside Blvd	South of 38th Pl NE	36th Pl NE
530	L	20	$1,114,000	3,930	8	12	Line Rd	83rd Ave NE	71st Ave NE
531	H	30	$1,666,000	5,880	8	12	83rd Ave NE	N of E Sunnyside School Rd	Soper Hill Rd
			$135,000	440	8	16			
532	M	22	$18,000	70	4	8	82nd Dr NE	32nd Pl NE	Cul-de-Sac
533	M	28	$139,000	490	8	12	30th Pl NE	83rd Ave NE	Dead-end
534	H	30	$1,983,000	7,000	8	12	E Sunnyside School Rd/87th Ave NE/Soper	83rd Ave NE	83rd Ave NE
			$367,000	1,300	12	12			
535	L	18	$159,000	620	6	8	79th Ave NE	Soper Hill Rd	N of 29th Pl NE
536	L	20	$925,000	880	8	12	Sunnyside Blvd	68th Dr NE	71st Ave NE
537	L	18	$14,000	60	6	8	71st Ave NE	Approx 33rd Pl NE	Approx 33rd Pl NE
538	L	19	$233,000	820	8	12	29th Pl NE/Private Property	Sunnyside Blvd	Sunnyside Blvd
539	M	29	$163,000	640	6	8	Sunnyside Blvd	29th Pl NE	S of 29th Pl NE
540	L	20	$198,000	780	6	8	72nd Dr NE	52nd St NE	49th Pl NE
			$10,000	40	8	8			
541	L	19	$77,000	300	6	8	49th Pl NE	West of 72nd Dr NE	East of 73rd Dr NE
542	L	19	$142,000	560	8	8	75th Ave NE	52nd St NE	50th Pl NE
543	M	27	$500,000	1,950	6	8	79th Ave NE	38th St NE	Approx 34th St NE
544	M	25	$27,000	110	6	8	52nd St NE	65th Dr NE	66th Ave NE
Total			**$179,249,000**						

* Priority: H = High, M = Medium, L = Low

A number of water main projects are higher priority than others. The water main replacement projects that were listed with an "H" (High) ranking in **Table 9-4** are listed in **Table 9-5**, starting with the highest priority.

Table 9-5

High Priority Annual Water Main Replacement Projects

No.	Priority Rank	Priority Points	Estimated Cost	Size Length (ft)	Size Diam (in) Existing	Size Diam (in) Proposed	Description In	Description From	Description To
69	H	30	$1,000	10	6	12	Private Property	40th Ave NE	Dead-end
			$145,000	510	8	12			
177	H	30	$100,000	390	6	8	120th St NE/36th Dr NE	122nd St NE	Shopping Center
			$184,000	650	6	12			
			$249,000	880	8	12			
178	H	30	$57,000	230	4	8	121st St NE	38th Ave NE	Dead-end
			$96,000	380	6	8			
179	H	30	$31,000	120	2	8	120th Pl NE, 39th Dr NE, 119th Pl NE, 40th Ave NE, 118th Pl NE	38th Ave NE	38th Ave NE
			$73,000	290	4	8			
			$541,000	2,110	6	8			
180	H	30	$357,000	1,390	6	8	38th Ave NE	Shopping Center	122nd St NE
			$15,000	60	8	12			
228	H	30	$526,000	2,050	6	8	100th St NE	Smokey Pt Blvd	51st Ave NE
			$135,000	480	6	12			
			$31,000	110	8	12			
233	H	32	$47,000	170	6	12	Private Property	Smokey Pt Blvd	Parking Lot
234	H	32	$33,000	120	6	12	Private Property	Smokey Pt Blvd	Parking Lot
236	H	30	$436,000	1,700	6	8	94th Pl NE	State Ave	96th St NE
			$27,000	100	6	12			
280	H	32	$287,000	60	6	12	State Ave	State Ave	Private Property
288	H	31	$619,000	1,230	6	12	88th St NE	State Ave	51st Ave NE
			$913,000	3,560	6	8			
299	H	30	$214,000	840	6	8	84th St NE	State Ave	55th Ave NE
			$391,000	1,380	6	12			
			$699,000	2,730	8	8			
			$2,000	10	8	12			
306	H	30	$258,000	1,010	6	8	81st Pl NE	State Ave	Dead-end
			$308,000	140	6	12			
313	H	31	$7,000	30	4	12	80th St NE	Cedar Ave	57th Dr NE
			$1,417,000	2,900	6	8			
			$475,000	730	6	12			
			$72,000	280	8	8			
			$670,000	2,370	8	12			
316	H	31	$160,000	630	6	8	Westwood Crossing Apartments, Short St	80th St NE	Beach Ave
			$386,000	1,360	6	12			
317	H	33	$390,000	1,520	6	8	Cedar Ave	80th St NE	1st St
			$1,185,000	4,180	6	12			
			$362,000	1,410	8	8			
			$6,000	20	8	12			
318	H	31	$59,000	230	6	8	Beach Ave	Dead End	1st St
			$986,000	3,480	6	12			
			$587,000	2,290	8	8			
			$114,000	410	8	12			
319	H	32	$2,000	10	6	12	Private Property	Cedar Ave	Dead-end
			$81,000	290	8	12			
328	H	30	$113,000	440	6	8	10th St	Ash Ave	Beach Ave
			$2,000	10	6	12			

Table 9-5 (continued)
High Priority Annual Water Main Replacement Projects

No.	Priority Rank	Priority Points	Estimated Cost	Size Length (ft)	Size Diam (in) Existing	Size Diam (in) Proposed	Description In	Description From	Description To
329	H	30	$108,000	430	6	8	Steele St	Ash Ave	State Ave
			$4,000	20	6	12			
			$582,000	1,220	8	8			
330	H	30	$111,000	430	6	8	8th St	Ash Ave	Cedar Ave
			$2,000	10	6	12			
			$98,000	380	8	8			
			$10,000	40	8	12			
331	H	30	$93,000	360	6	8	6th St	Ash Ave	Cedar Ave
			$124,000	440	6	12			
332	H	31	$289,000	70	4	12	5th St	Ash Ave	Alder Ave
			$412,000	1,610	6	8			
			$222,000	790	6	12			
346	H	30	$89,000	350	6	8	3rd St	Cedar Ave	Ash Ave
			$67,000	240	6	12			
348	H	30	$27,000	110	4	8	2nd St	Ash Ave	RR Tracks
			$138,000	540	6	8			
			$18,000	60	6	12			
			$8,000	30	6	16			
350	H	31	$387,000	1,370	6	12	Marysville Town Center	4th St	1st St
			$871,000	1,170	8	12			
			$97,000	340	12	12			
361	H	30	$49,000	180	6	12	Shopping Center	State Ave	Parking Lot
			$36,000	130	8	12			
363	H	30	$65,000	230	6	12	Shopping Center	Grove St	Parking Lot
364	H	32	$54,000	190	6	12	Shopping Center	43rd Ave NE	Parking Lot
366	H	33	$430,000	1,680	8	8	76th St NE	State Ave	47th Ave NE
			$164,000	580	8	12			
			$5,000	20	8	16			
367	H	31	$55,000	200	6	12	44th Ave NE	76th St NE	Grove St
			$104,000	340	6	16			
			$381,000	1,350	8	12			
369	H	39	$400,000	1,410	6	12	47th Ave NE	84th St NE	Grove St
			$540,000	2,110	8	8			
			$143,000	510	8	12			
370	H	31	$239,000	930	6	8	50th Dr NE/49th Dr NE	80th St NE	75th Pl NE
			$168,000	600	6	12			
379	H	30	$631,000	2,460	6	8	74th Pl NE, 75th St NE	55th Dr	Dead-end
			$211,000	750	6	12			
380	H	30	$288,000	1,120	6	8	73rd Pl NE	51st Ave NE	Dead-end
			$111,000	400	6	12			
384	H	31	$102,000	400	6	8	Kimberly Ln/Liberty Ln	Alder Ave	Liberty St
			$456,000	1,610	6	12			
386	H	31	$156,000	610	6	8	Columbia Ave	Grove St	9th St
			$237,000	840	6	12			
			$98,000	350	8	12			
391	H	30	$559,000	2,180	6	8	10th St	Liberty St	State Ave
			$31,000	110	8	12			

Table 9-5 (continued)
High Priority Annual Water Main Replacement Projects

No.	Priority Rank	Priority Points	Estimated Cost	Size Length (ft)	Size Diam (in) Existing	Size Diam (in) Proposed	Description In	Description From	Description To
394	H	31	$560,000	2,190	6	8	9th St	Liberty St	State Ave
			$8,000	30	6	12			
			$30,000	110	8	12			
395	H	39	$73,000	290	6	8	Delta Ave	Steele St	4th St
			$32,000	120	6	12			
			$264,000	940	12	12			
			$99,000	320	12	16			
396	H	31	$648,000	2,530	6	8	8th St	State Ave	Liberty St
			$2,000	10	6	12			
			$41,000	150	8	12			
403	H	30	$122,000	480	6	8	6th St	Delta Ave	Alder Ave
			$114,000	400	6	12			
			$20,000	70	8	12			
			$100,000	360	12	12			
405	H	31	$171,000	670	6	8	Marysville Middle School	Grove St	Liberty St
			$480,000	1,700	6	12			
410	H	30	$306,000	1,080	6	12	67th St NE	Liberty St	Armar Rd
			$137,000	490	8	12			
416	H	31	$129,000	510	6	8	4th St	State Ave	Liberty St
			$525,000	1,850	6	12			
418	H	31	$458,000	1,790	6	8	3rd St	State Ave	Liberty St
			$148,000	520	6	12			
419	H	31	$211,000	750	6	12	2nd St	State Ave	Liberty St
			$82,000	320	8	8			
			$333,000	1,180	8	12			
421	H	30	$48,000	190	6	8	Union Ave	2nd St	1st St
			$1,000	10	6	12			
424	H	30	$266,000	940	8	12	56th Pl NE/48th Dr NE/Private Property	Liberty St	Liberty St
425	H	31	$1,148,000	4,050	8	12	Columbia Ave	1st St	South of River
453	H	31	$725,000	2,830	6	8	59th Ave NE, 75th Pl NE, 57th Dr NE, 56th Dr NE	Grove St	80th St NE
			$0	0	6	12			
458	H	30	$305,000	1,190	6	8	60th Dr NE	Grove St	N of 80th St NE
			$47,000	170	6	12			
			$1,000	10	8	12			
459	H	30	$2,000	10	4	12	74th St NE/Library	Grove St	Grove St
			$266,000	1,040	6	8			
			$290,000	1,030	6	12			
486 [1]	H	16	$366,000	1,180	12	16	Grove St/Cedarcrest Res Site	69th St NE	Cedarcrest Reservoir
521	H	33	$429,000	1,680	4	8	40th St NE	Sunnyside Blvd	West of 68th Dr NE
			$22,000	90	8	8			
527	H	38	$1,422,000	2,640	6	12	Sunnyside Blvd	50th Dr NE	42nd St NE
528	H	30	$158,000	560	6	12	Sunnyside Blvd	Approx 41st St NE	North of 38th Pl NE
529	H	34	$109,000	390	6	12	Sunnyside Blvd	South of 38th Pl NE	36th Pl NE
531	H	30	$1,666,000	5,880	8	12	83rd Ave NE	N of E Sunnyside School Rd	Soper Hill Rd
			$135,000	440	8	16			
534	H	30	$1,983,000	7,000	8	12	E Sunnyside School Rd/87th Ave NE/Soper	83rd Ave NE	83rd Ave NE
			$367,000	1,300	12	12			
Total			**$38,168,000**						

1 = This CIP project was manually assigned a high priority due to consistent high velocities.

OTHER IMPROVEMENTS

The additional water main, pressure zone, and facility improvements were prioritized based on existing deficiencies, safety concerns, and maintenance and capacity requirements. The miscellaneous improvements were prioritized based on regulatory requirements, funding availability, and an assessment of other water system needs. The priority order of these improvements is reflected in the schedule of improvements presented in the next section.

SCHEDULE OF IMPROVEMENTS

The improvement prioritization results were used to assist in establishing an implementation schedule that can be used by the City for preparing its 6-year CIP and annual water budget. The implementation schedule for the proposed improvements is shown in **Table 9-6.** An allowance of approximately $165,000 per year has been established for the annual replacement of water mains. The City will identify and schedule the replacement of these smaller water mains during its annual budget process. This provides the City with the flexibility to coordinate these projects with road or other projects in the same areas.

FUTURE PROJECT COST ADJUSTMENTS

All cost estimates shown in the tables are presented in year 2016 dollars. It is recommended that future costs be adjusted to account for the effects of inflation and changing construction market conditions at the actual time of project implementation. Future costs can be estimated using the Engineering News Record (ENR) Construction Cost Index for the Seattle area or by applying an estimated rate of inflation that reflects the current and anticipated future market conditions.

Table 9-6
Proposed Improvements Implementation Schedule

No.	Description	Estimated Cost (2016 $)	20-Year Schedule of Improvements Planned Year of Project and Estimated Cost in 2016 $											
			2017	2018	2019	2020	2021	2022	2023	2024	2025	2026	2027-2036	2037+
	Water Main Improvements													
WM1	Annual Water Main Replacement Program	$179,249,000	$165K	$165K	$165K	$165K	$165K	$165K	$165K	$165K	$165K	$165K	$1,650K	$175,949K
WM2	Replace CI Water Main in SR 531 with DI	$9,570,000					$1,914K	$4,307K	$3,350K					
WM3	Replace CI and AC Water Main in Smokey Pt Blvd with DI	$9,490,000		$759K	$2,088K	$2,847K	$3,796K							
WM4	Replace CI WM in 51st Ave NE, Armar Rd, and Liberty St with DI	$12,330,000								$5,549K	$5,549K	$1,233K		
WM5	Replace CI WM in Grove St with DI	$5,110,000										$4,344K	$767K	
WM6	Replace AC WM in Forty Five Rd, 23rd Ave NE, and 140th St NE	$5,130,000	$3,488K	$1,642K										
WM7	Replace CI WM in 100th St NE	$1,220,000											$1,220K	
WM8	Replace CI WM in 55th Ave NE	$1,360,000											$1,360K	
WM9	Replace CI WM in 71st Ave NE	$2,650,000											$2,650K	
WM10	Replace CI WM in Marine Dr NE and Quil Ceda Creek Casino Area	$2,650,000											$2,650K	
WM11	Replace CI WM in 61st St NE and Sunnyside Blvd	$1,700,000											$1,700K	
WM12	Replace CI WM in 67th Ave NE, 52nd St NE, and between 52nd St NE and Sunnyside Reservoir	$2,820,000											$2,820K	
WM13	Loop Water Main to Improve FF at Cedarcrest Golf Course	$240,000	$240K											
WM14	Loop Water Main to Improve FF in Glenwood Mobile Estates	$440,000	$440K											
WM15	Connect Water Main in Smokey Pt Blvd to Improve FF	$30,000	$30K											
WM16	Loop Water Main to Improve FF in 48th Dr NE/Liberty St Area	$150,000	$150K											
	Pressure Zone Improvements													
PZ1	North 240 Zone Conversion to 327 Zone	$1,410,000	$470K	$940K										
PZ2	Convert to 360 Zone from 510 Zone	$10,000	$10K											
PZ3	Convert to 360 Zone from 440 Zone	$10,000	$10K											
PZ4	Convert to 360 Zone from 240 Zone	$310,000		$310K										
PZ5	Convert to 360 Zone from 510 Zone	$10,000	$10K											
PZ6	Convert to 285 Zone from 415 Zone	$150,000			$150K									
PZ7	Convert to 360 Zone from 415 Zone	$280,000				$280K								
PZ8	Convert to 560 Zone from 510 Zone	$1,710,000											$1,710K	
PZ9	Convert to 510 Zone from 360 Zone	$10,000	$10K											
PZ10	Convert to 510 Zone from 360 Zone	$120,000											$120K	
PZ11	Convert to 360 Zone from 415 Zone	$10,000											$10K	
	Facility Improvements													
F1	560 Zone BPS and Pressure Zone Conversion	$2,900,000			$967K	$1,933K								
F2	Future Water Service Area Planning	$100,000	$100K											
F3	Future Water Service Area 510 Zone Reservoir	$2,800,000											$2,800K	
F4	Soper Hill 415 Zone Reservoir and Water Main	$3,300,000						$1,100K	$2,200K					
F5	Future Water Service Area 510 Zone BPS	$3,200,000											$3,200K	
F6	Sunnyside 510 Zone BPS and Water Main	$4,100,000		$1,435K	$2,460K	$205K								
F7	Replace Lake Goodwin Standpipe	$960,000	$320K	$640K										
F8	Pilot Study/Predesign for Manganese Treatment Plant at Lake Goodwin Well	$150,000				$150K								
F9	Construction of Manganese Treatment Plant at Lake Goodwin Well	$2,400,000											$2,400K	
F10	Pilot Study/Predesign for Arsenic Treatment Plant and Capacity Improvements at Edward Springs	$300,000				$300K								
F11	Construction of Arsenic Treatment Plant and Capacity Improvements at Edward Springs	$11,500,000											$11,500K	
F12	Reservoir Cathodic Protection	$250,000	$250K											
F13	Highway 9 Well Evaluation Study	$200,000	$200K											
F14	Highway 9 Well Improvements	$4,500,000											$4,500K	
F15	327 Zone to 240 Zone PRV	$140,000				$140K								
	Miscellaneous Improvements													
M1	Fire Hydrant Replacement Program	$1,500,000	$75K	$75K	$75K	$75K	$75K	$75K	$75K	$75K	$75K	$75K	$750K	
M2	Water System Plan Update	$500,000											$250K	$250K
Total Estimated Costs of City Funded Impr.		**$276,969,000**	**$5,968K**	**$5,966K**	**$5,904K**	**$6,095K**	**$5,950K**	**$5,647K**	**$5,790K**	**$5,789K**	**$5,789K**	**$5,817K**	**$42,057K**	**$176,199K**

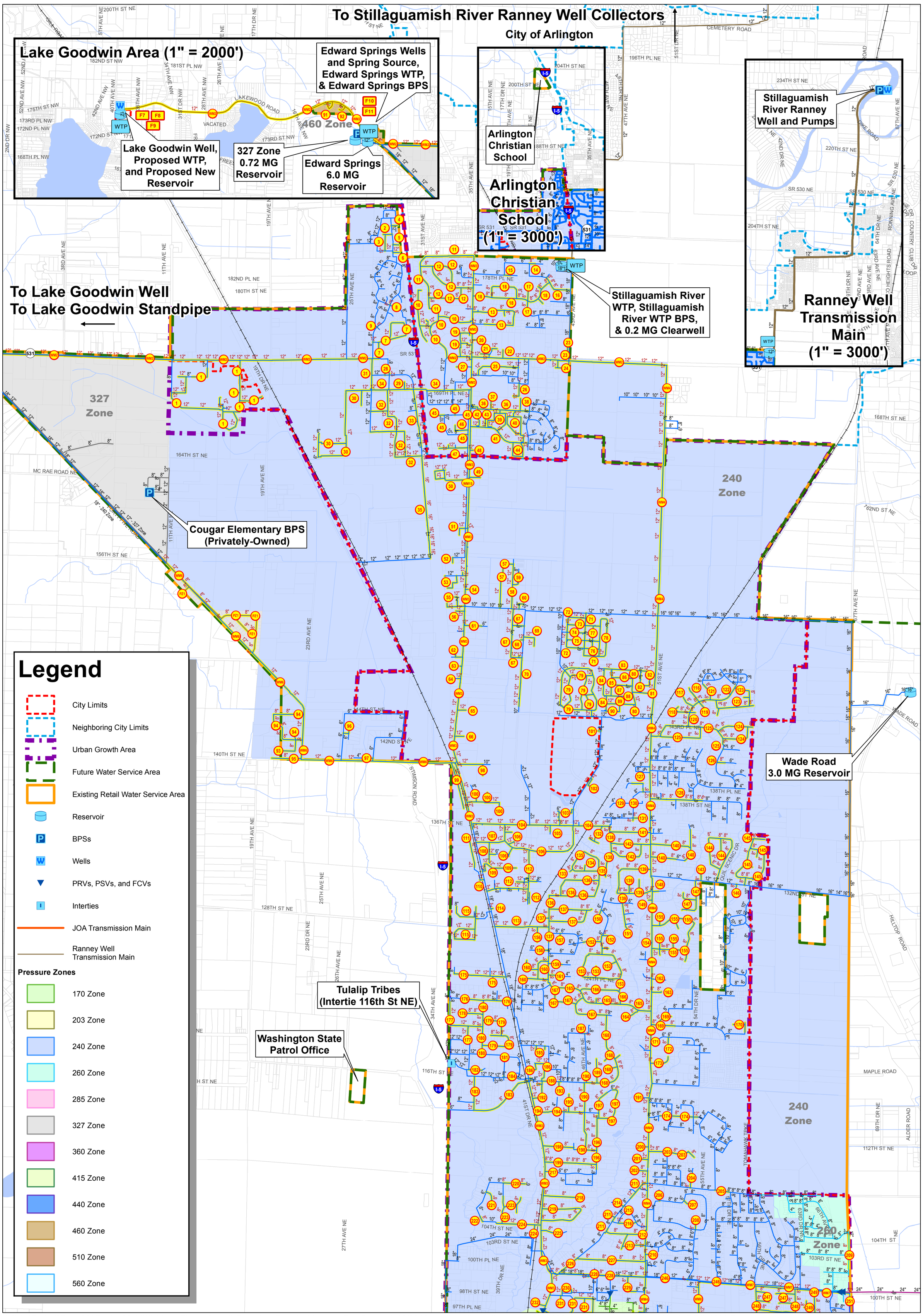

\\rh2\dfs\Bothell\Data\MAR\114-084\GIS\Maps\Figure 9-1a CIP.mxd By:gdavidson Plot Date: 10/18/2016 Coordinate System: NAD 1983 StatePlane Washington North FIPS 4601 Feet

NORTH

RH2 ENGINEERS PLANNERS SCIENTISTS

1 inch = 1,200 feet

0 600 1,200 2,400 Feet

DRAWING IS FULL SCALE WHEN BAR MEASURES 2"

CITY OF Marysville WASHINGTON

Figure 9-1A
Capital Improvement Projects - North
City of Marysville
2016 Water System Plan

Vicinity Map

Esri, HERE, DeLorme, MapmyIndia, © OpenStreetMap contributors, and the GIS user community

This map is a graphic representation derived from the City of Marysville Geographic Information System. It was designed and intended for City of Marysville staff use only; it is not guaranteed to survey accuracy. This map is based on the best information available on the date shown on this map.

Any reproduction or sale of this map, or portions thereof, is prohibited without express written authorization by the City of Marysville.

This material is owned and copyrighted by the City of Marysville.

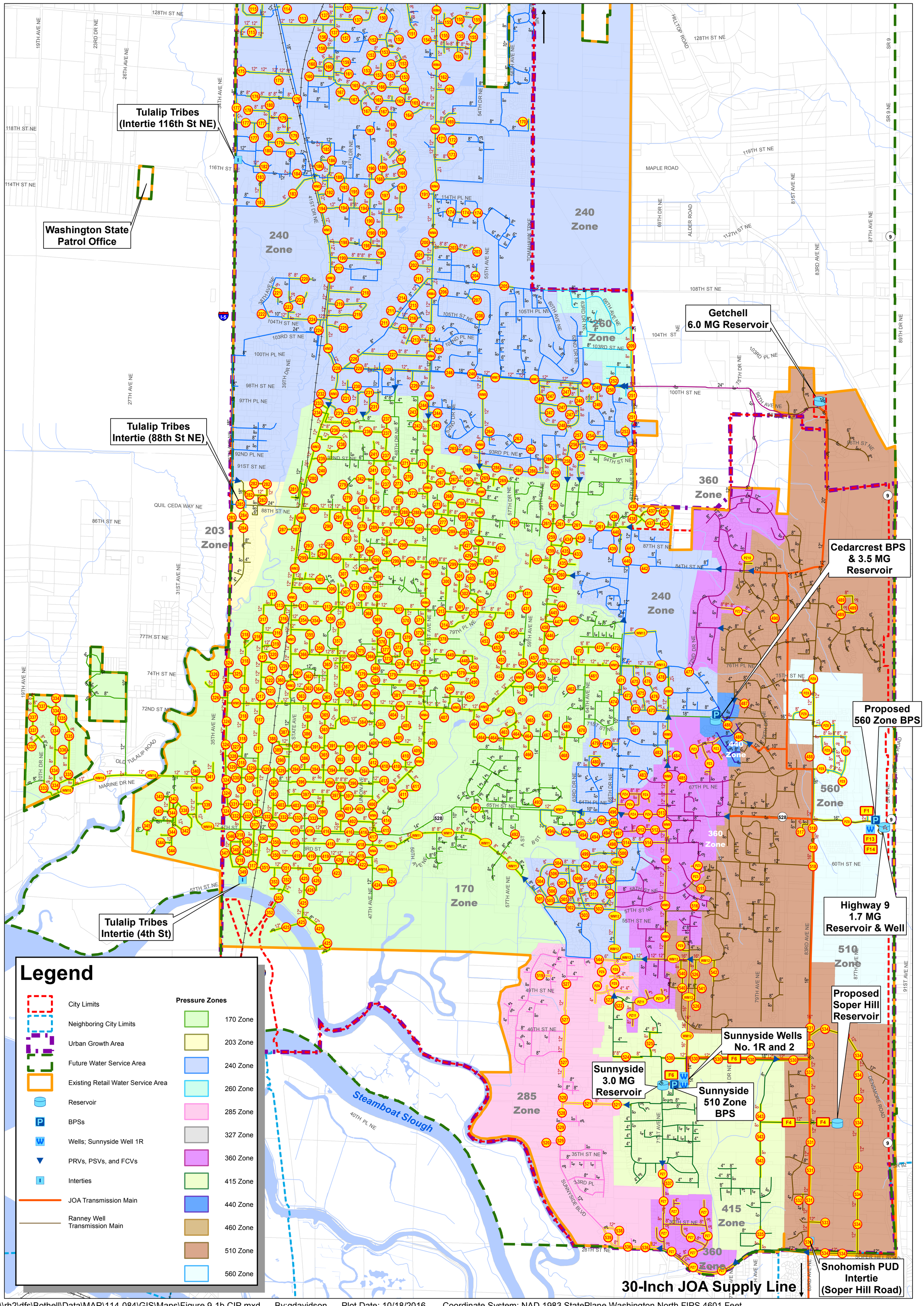

\\rh2\dfs\Bothell\Data\MAR\114-084\GIS\Maps\Figure 9-1b CIP.mxd By:gdavidson Plot Date: 10/18/2016 Coordinate System: NAD 1983 StatePlane Washington North FIPS 4601 Feet

NORTH

1 inch = 1,200 feet

0 600 1,200 2,400 Feet

DRAWING IS FULL SCALE WHEN BAR MEASURES 2"

CITY OF Marysville WASHINGTON

Figure 9-1B
Capital Improvement Projects - South
City of Marysville
2016 Water System Plan

Vicinity Map

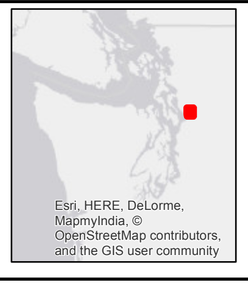

This map is a graphic representation derived from the City of Marysville Geographic Information System. It was designed and intended for City of Marysville staff use only; it is not guaranteed to survey accuracy. This map is based on the best information available on the date shown on this map.

Any reproduction or sale of this map, or portions thereof, is prohibited without express written authorization by the City of Marysville.

This material is owned and copyrighted by the City of Marysville.

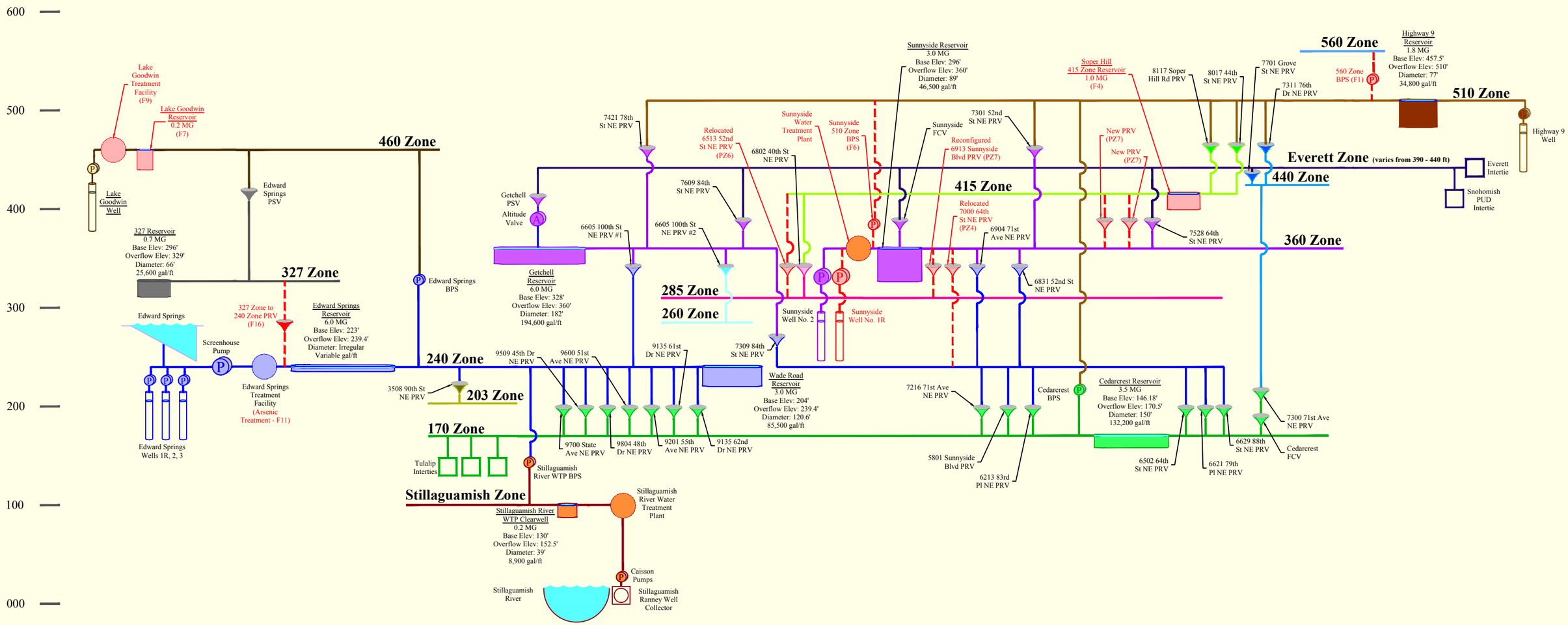

Legend

170 Zone	327 Zone	560 Zone	Altitude Valve
203 Zone	360 Zone	Everett Zone	Intertie
240 Zone	415 Zone	Well Pump	Improvements
260 Zone	440 Zone	Booster Pump Station	
285 Zone	460 Zone	Pressure Reducing, Sustaining, or Flow Control Station	
Stillaguamish Zone	510 Zone		

City of Marysville
Water System Plan

Figure 9-2
Proposed Improvements
Hydraulic Profile

Date: MAY 25, 2016 File: MAR\114-084\CAD\FIG 9-2.DWG

10 | FINANCIAL ANALYSIS

INTRODUCTION

The effective implementation of a Water System Plan (WSP) is dependent upon accurately developing a plan that can be financially supported by the utility; will meet state and local regulatory requirements; and can provide the flexibility to deal with unforeseen changes.

This chapter presents a financial plan that reviews the revenues and expenses for the City of Marysville's (City) water system. The financial plan includes projected operating and capital costs of the system for the 6-year time horizon of 2016 to 2021. The revenues and expenses used in the financial plan were obtained from the City's 2014 *Audited Comprehensive Annual Financial Report* (CAFR). Revenues and expenses were updated to reflect the 2016 budget. The City completed a comprehensive rate study in November of 2015. The capital costs contained within the financial plan utilize the Capital Improvement Plan (CIP) in **Chapter 9** of this Water System Plan. The results of the financial plan outline the annual operating and capital needs of the water system and determine if the current water utility revenues are sufficient to cover operating and capital costs. This analysis is not intended to provide a detailed review of cost of service or various alternative rate designs.

PAST FINANCIAL HISTORY

The past 2 years of financial information for the water utility were evaluated to gain an understanding of the past performance of the utility, and at the same time, gain perspective of the current financial status of the water utility.

Table 10-1 is a summary of a 2-year financial history (2013 and 2014) for the City's water utility, as reported in the City's annual audited financial statements for 2013 and 2014.

Table 10-1
Water System Financial History

	2013	2014
Total Revenue	$9,972,432	$10,561,673
Expenses		
O&M	$7,585,495	$6,805,429
Debt Service	$1,362,120	$1,996,380
Total	$8,947,615	$8,801,809
Balance in Capital Funding	$1,024,817	$1,759,864

Overall, the utility has adequate revenue for operations and capital. In 2016, the City issued a $44 million revenue bond for capital improvements. Some capital improvements are also funded through low interest loans and revenue bonds, resulting in debt service payments. Target levels for funding capital improvements for future years are discussed later in this chapter. Historically, the City has managed its financial resources in a prudent manner to meet the operating, capital, and regulatory needs of the utility.

DEVELOPMENT OF THE FINANCIAL PLAN

A financial projection was developed to determine the utility's ability to meet its capital improvement and operating needs over the 6-year time period being reviewed. Fund balance and reserve levels were also analyzed in developing the financial projection. The financial plan was developed to review the projected revenues and expenses of the water system for 2016 to 2021. This time period is consistent with the 6-year planning period contained within the other WSP chapters. The City's adopted 2016 budget was used as a base. Future years were escalated by applying factors for inflation and growth, which are described below.

REVENUE

The first component of the financial plan is to review the sources of revenue of the water system. The different revenues received from operations are:

- Rate revenues – water sales to customer accounts; and
- Other revenues – interest income, water connections, treated water, and other miscellaneous sources.

Projections for future year rate revenues were developed by applying a projected growth rate to the 2016 budgeted rate revenue (**Table 10-2**). The 2016 budget assumes a 4-percent growth from 2015, which was 7 percent above 2014. The average 2-year growth is 5.7 percent. The revenue growth rate assumption for projections from 2016 is 2 percent. This assumption is very conservative when compared to the current average growth of 5.7 percent.

Other miscellaneous revenues, including investment interest, water connections, and other sources, are also projected to increase by an average of 2 percent per year through 2021.

Rate revenues are projected to be approximately $9.4 million in 2016. The rate revenues of the utility come from water sales to the residential, commercial, and irrigation customers, as well as schools. The rate revenue is estimated to increase to $10.3 million by 2021, applying the above-mentioned growth each year.

Other revenues for 2016 total approximately $829,000; a majority of the revenue stems from miscellaneous service revenue. The total amount of other revenue increases over the next 6 years, reaching approximately $1.2 million by 2021.

Table 10-2
Projected Six-Year Revenues ($000s)

Sources of Funds	Budget 2016	Projected 2017	2018	2019	2020	2021
Rate Revenue	$ 9,394	$ 9,571	$ 9,752	$ 9,937	$ 10,125	$ 10,317
Miscellaneous Revenue	$ 829	$ 510	$ 1,144	$ 1,160	$ 1,175	$ 1,191
Total	$ 10,223	$ 10,081	$ 10,896	$ 11,097	$ 11,300	$ 11,508

The total revenue available to offset the operating and capital requirements of the water system totals $10.22 million in 2016, and is projected to increase to $11.5 million by 2021.

EXPENSES

The second part of the financial plan is to review the applications of funds, or expenses. The projection of future operating expenses is based on 2016 budget levels. These expenses are projected for future years by applying the escalation factors pertinent to the type of expense being reviewed. The escalation factors range from 1.5 percent to 8 percent.

Four main cost components were reviewed in developing the financial forecast:

- Operations and Maintenance (O&M);
- Taxes Expenses;
- Debt Service; and
- Capital Improvements Funded from Rates.

Operation and Maintenance Expenses

Using the 2016 budget as a starting point, expenses were escalated by factors representing assumed inflationary rates to obtain projected costs. Escalation factors include labor (escalated by 4 percent per year), benefits (average 7.7 percent), materials and supplies (2.5 percent), and miscellaneous (2.5 percent).

Some O&M expenses are shared by the City's water, sewer, and stormwater utilities. The costs were prorated by 33 percent in these cases to represent only the water utility's share of the expense.

Some program cost increases and decreases were seen in the 2016 budget. These were noted and reviewed with City staff to determine the appropriate cost level to escalate into future years. O&M expenses are projected to be $8.8 million in 2016 and increase to $10.4 million in 2021. These costs include the utility's taxes and transfer expenses.

Taxes and Transfer Payments

The Water Utility pays the state public utility tax (5.29 percent), for which the City is eligible for reductions and exemptions for irrigation and wheeling revenue. There is also a local excise tax of

8.5 percent, and an additional "in lieu of tax" based on $3.375 per thousand dollars of plant value. The taxes are contained in the overall Utility Administration section budget, which also applies to wastewater and stormwater. An allocation of 33 percent was determined for the Water Utility. Taxes total $1.5 million in 2016, and increase to $1.8 million by 2021.

Debt Service

According to City financial records, there is a 2005 Water/Sewer Revenue bond and a Drinking Water Revolving Fund loan that relate to the water utility. The Drinking Water Revolving Fund loan is specifically for Stillaguamish water system improvements. The 2005 Revenue bond was refunded in 2014. The combined debt service on the existing debt averages approximately $1.6 million for the 2016 to 2021 time period. The financial plan assumes no new debt.

Meeting debt service coverage (DSC) requirements is an important financial indicator for well-managed utilities. DSC is a financial measurement of an entity's ability to repay debt. A DSC ratio is a comparison of net income before debt service payments to the total debt service on revenue bonds, or on all outstanding debt service. A DSC ratio of 1.25 or 1.30 is generally considered the legally acceptable minimum for revenue bonds. A DSC ratio of 1.5 is considered a financially stronger target. Bond rating agencies look at a utility's DSC ratio to determine the utility's rating, which affects interest rates for future bond issues. The higher the DSC ratio, the better the rating, and the lower future interest rates and debt payments. The City is projected to meet the DSC ratio requirement in the years 2016 to 2021. The City's Water Utility has a DSC of 1.68 in 2016, which is projected to be 2.31 in 2021, as current revenues are projected to fully fund projected operating costs.

Capital Improvements Funded from Rates

Capital improvements are related to the infrastructure of a utility. The modeling of this WSP identified a number of projects for infrastructure improvements. The CIP also contains a number of renewal, replacement, and growth-related projects. Renewal and replacements projects replace existing and worn out (depreciated) facilities. Some renewal and replacement projects are major maintenance projects, such as water main replacements. Some projects are also due to regulatory requirements (e.g., Safe Drinking Water Act). Growth-related projects are related to system expansion and new customers. Many of the utility capital projects contain all three elements. That is, they address a regulatory issue, they will replace an existing facility, and they will be designed and built to provide service for growth. Funding sources are determined, in part, by what type of improvements the project provides.

The City capitalizes some staff time and benefits for those staff working on capital projects. The financial analysis conducted for this WSP has incorporated the capital projects outlined in **Chapter 9**. These projects have been assigned in the year they are expected to be completed, along with any known or anticipated funding sources. Identified capital improvement project totals range from approximately $110,000 to $6.1 million from 2016 to 2021, and total approximately $27.5 million over the projected 6-year period. **Table 10-3** presents a summary of the capital improvement projects and funding sources of the utility.

Table 10-3
Projected Capital Improvement Needs ($000s)

	2016	2017	2018	2019	2020	2021
Water Supply Improvements						
Water Supply and Treatment	$ 6,100	$ -	$ -	$ -	$ -	$ -
Water Storage	$ -	$ -	$ -	$ 2,423	$ -	$ -
Water Pump Stations	$ -	$ -	$ -	$ -	$ -	$ -
Water Transmission and Distribution System	$ 110	$ 113	$ 116	$ 3,424	$ 5,089	$ 3,547
Water Maintenance and Operations	$ -	$ 3,213	$ 173	$ 178	$ 182	$ -
Transfer to Capital Reserves	$ -		$ 2,485	$ -	$ -	$ 164
Transfer to Operations	$ -	$ 217		$ -	$ -	$ -
Total	$ 6,210	$ 3,543	$ 2,774	$ 6,025	$ 5,271	$ 3,711
Oustide Funding Sources						
Capital Improvement Charges	$ 2,228	$ 2,259	$ 2,302	$ 2,359	$ 2,394	$ 2,433
New Revenue Bond Proceeds	$ -	$ -	$ -	$ -	$ -	$ -
New Low Interest Loans	$ -	$ -	$ -	$ -	$ -	$ -
Use of Operating Reserve	$ 1,942	$ 642		$ 1,292	$ 827	
Use of Capital Reserve	$ 1,991	$ 642	$ -	$ 1,833	$ 1,439	$ 557
Total	$ 6,161	$ 3,543	$ 2,302	$ 5,484	$ 4,660	$ 2,990
Net CIP Funded From Rates	$ 49	$ -	$ 472	$ 541	$ 611	$ 721

Capital costs are inclusive of inflation.

It is anticipated that the City will use a large amount of reserve funding to cover its capital improvements. Reserve funds are discussed in more detail later in this chapter.

As a practical matter, and prudent practice, a utility should fund a portion of its capital improvements from rates on an on-going basis. Funding projects from existing and future customers is prudent, as the improvements benefit both.

A general financial guideline to determine proper capital funding levels from rates is an amount equal to or greater than annual depreciation expense. For 2015, the City's depreciation expense is $2 million. The next 6 years of capital improvements would increase the annual depreciation. The City is pursing "no debt" approach to funding capital improvements whenever possible, which translates into reserving rate revenue and grant funding. The last 3 years averaged $2 million from rates towards capital improvement funding.

EXTERNAL SOURCES OF FUNDS FOR CAPITAL PROJECTS

The City has the ability to apply for grant and loan funds available to public entities for water system projects. **Table 10-4** provides a list of contacts for various funding agencies.

Table 10-4
Funding Agency Contacts

Program	Address	Phone	Internet
Centennial Clean Water Fund	Department of Ecology PO Box 47600 Olympia, WA 98504-700	360.407.6000	www.ecy.wa.gov
Drinking Water State Revolving Fund	Department of Health DWSRF PO Box 47822 Olympia, WA 98504-782	360.236.3116	www.doh.wa.gov
Public Works Trust Fund	Public Works Board PO Box 42525 Olympia, WA 98504-2525	360.725.3162	www.pwb.wa.gov
Infrastructure Database	Infrastructure Assistance Coordinating Council (IACC)		www.infrafunding.wa.gov

These sources rarely provide full funding of a construction project. The City would need to supplement any of these funds with matching funds to meet eligibility criteria and ensure that implementation of the recommended capital improvement projects can occur.

A brief description of these funding sources is provided below.

Centennial Clean Water Fund (CCWF) – Managed by the Washington State Department of Ecology (Ecology), the CCWF is available to local governments and tribes for measures to prevent and control water pollution. Both grants and loans are available on a yearly funding cycle.

CCWF is the largest state grant program for water projects. It provides grants for planning, design, and construction of facilities and other activities related to water quality. The primary focus of the program is pollution prevention, as well as funding projects with a quantifiable water quality benefit. The CCWF funding cycle requires that applications be submitted by mid-October.

Funds are available to protect a source of water supply, as well as funding of water conservation or water reuse projects, if they can be shown to be a cost-effective alternative to solve a water quality problem. Funding from this program is not available to provide excess capacity, but must be used to meet existing customer needs. Funding cannot be used to provide a source of supply. Grants and loans from this program also are available for wellhead protection activities.

Grant funding of 0 to 50 percent of a project's cost is available depending on the type of project.

Drinking Water State Revolving Fund (DWSRF) – The Washington State Department of Health (DOH) manages these funds. In August 1996, Congress reauthorized the Safe Drinking Water Act (SDWA) and appropriated funding for states to develop their DWSRF loan programs. Each state receives annual allocations in the form of a Capitalization Grant. In Washington State, the DWSRF is jointly managed by the DOH, Division of Drinking Water, and the Public Works Trust Fund Board (Board), along with its partner, the Department of Community, Trade, and Economic Development.

DWSRF loans are available to all community public water systems and non-profit, non-community public water systems, except federally owned systems. The loans may be used to address SDWA health standard violations, replace infrastructure for SDWA compliance, or consolidate supplies and acquire property if needed for SDWA compliance.

The terms of the loan are generally 1 to 1.5-percent interest, and the life of the loan can extend for the life of the facility, up to a 20-year maximum. In addition, eligible systems must demonstrate "adequate operational, technical, and financial capability to maintain compliance," have an approved WSP to ensure the applicant's project is included in the WSP Capital Improvement Program, and meet other eligibility criteria.

Public Works Trust Fund – The Public Works Trust Fund (PWTF) loan program is a loan set up by the Legislature to assist cities, towns, counties, or special districts with funding for different types of public works projects. The projects can include streets, roads, bridges, drainage systems, water systems, and sanitary sewer systems. The emphasis of allocating funds is for replacement and/or repair of existing systems. No funds are allocated to install a new system. Rather, loans are provided to rehabilitate or replace an existing system serving an existing population.

The loans are issued at up to a 1-percent interest rate for a maximum term of 20 years for applications requesting 95-percent funding of the project. The interest rate decreases to 0.5 percent when the local government provides 15 percent of the project funding. A debt service coverage requirement is not imposed on the PWTF loan.

Infrastructure Database – One key resource in identifying other funding programs is the Infrastructure Assistance Coordinating Council (Council). The Council is comprised of state and local organizations whose function is to provide funding for infrastructure repair and development. This is an important resource, as the Council will be aware of any new funding opportunities that may arise.

Revenue Bonds – Revenue bonds are an external source of funding for capital projects. The sale of revenue bonds is the most common source of funds for construction of major utility improvements. Water rates and charges are the main source of funds for debt service (principal and interest) payments. A key benefit of revenue bonds is the exemption of interest paid on them from federal income taxes. A determination of the utility's ability to repay debt is an important consideration. A debt service coverage ratio (total revenue, less O&M and tax expenses, divided by debt requiring a coverage ratio) is calculated and the utility's finances are reviewed to verify payments are feasible. Coverage ratios of 1.25 (25 percent more than the debt payment) are typical, but coverage of 1.5 is a more prudent financial target.

Similar to revenue bonds, other bond financing approaches include utility local improvement districts (ULIDs), special assessment districts (SADs), and other funding for projects that serve and benefit a limited service area within the City's total service area. The costs of these improvements are shared only by those customers benefiting from those improvements.

Utility Local Improvement Districts (ULID) – Projects benefiting a specific area of adjacent properties can be funded through ULIDs. After a ULID is formed, the cost of the project can be assessed against the benefited properties in proportion to their share of the total benefits. The amount of the assessment cannot exceed the increase in the value of the property resulting from the project.

A ULID combines property assessments and revenue funding from water rates. The additional security of the bonds tends to bring lower interest rates. There is also added flexibility and equity as

the City can accommodate the cost of special construction problems or of upsizing the distribution system.

While the above list of possible grant, loan, and other funding opportunities for the City is not exhaustive, it does highlight the most probable outside funding sources available to the City for its capital improvements.

Developer Extensions – Developer extensions are one way to manage growth of the system to meet new customer needs. Under a developer extension, the owner of a development requests water service. Filing fees usually cover administration costs only. The developer pays all costs of the extension and turns the facility over to the City for operation and maintenance.

INTERNAL SOURCES OF FUNDING FOR CAPITAL PROJECTS

Internal funding sources available to offset capital costs include contributions received from new water customers for their capacity impact on the system. The City charges Capital Improvement Charges to new developments to help fund capital improvements related to growth. These fees are important to bring equity between new and existing customers. Funding from these charges is projected to be $2.2 million in 2016, up from actual revenue in 2015 of over $1.8 million. This revenue source has declined with the economy in recent years. It is anticipated to remain relatively flat through 2021. The 2016 charge for a 5/8 inch by 3/4 inch meter (connection) is $4,750. The charges are based on the customer classification (i.e., residential, commercial, etc.). These charges should be adjusted annually to keep up with the construction cost index. A commonly used measure for these annual updates is the Engineering News Record. A comprehensive update of these fees should be evaluated every 3 to 5 years, or as new major capacity-related projects are undertaken. As of the writing of this chapter, the City is in the process of reviewing and updating this fee.

As noted earlier, the City also uses reserves for capital projects as available.

SUMMARY OF THE FINANCIAL PROJECTIONS

A summary of the financial plan and resulting financial status of the water system is provided in **Table 10-5**. This is an abbreviated summary of the detailed financial plan and analysis, which is provided in **Appendix 10-1**.

Table 10-5
Projected Six-Year Financial Plan ($000s)

	Budget	Projected				
	2016	2017	2018	2019	2020	2021
Sources of Funds						
Water Sales	$ 9,394	$ 9,571	$ 9,752	$ 9,937	$ 10,125	$ 10,317
Other Sources	$ 829	$ 510	$ 1,144	$ 1,160	$ 1,175	$ 1,191
Total	$ 10,223	$ 10,081	$ 10,896	$ 11,097	$ 11,300	$ 11,508
Applications of Funds						
O&M and Taxes	$ 8,754	$ 9,070	$ 9,399	$ 9,744	$ 10,104	$ 10,442
CIP Funded From Rates	$ 49	$ -	$ 472	$ 541	$ 611	$ 722
Debt Service (P+I)	$ 1,597	$ 1,594	$ 1,590	$ 1,588	$ 1,584	$ 1,579
Total	$ 10,400	$ 10,664	$ 11,461	$ 11,873	$ 12,299	$ 12,743
Balance/Deficiency of Funds	$ (177)	$ (583)	$ (565)	$ (776)	$ (999)	$ (1,235)
Plus: Additional Taxes	$ (9)	$ (29)	$ (28)	$ (39)	$ (50)	$ (62)
Total Bal/(Def) of Funds	$ (186)	$ (612)	$ (593)	$ (815)	$ (1,049)	$ (1,297)
Bal/Def as a % of Rates	2.0%	6.4%	6.1%	8.2%	10.4%	12.6%

When interpreting the results of **Table 10-5**, it is important to understand that the "Bal/Def as a % of Rates" is cumulative. That is, any rate adjustments made in previous years would reduce the required adjustment in the following years. If no adjustments were made prior to 2021, a 12.6 percent adjustment would be required. It is also important to keep in mind that the model assumes expenses are completely expended within each year. Typically, utilities receive additional revenue; often, actual expenditures do not total 100 percent of budget appropriations. Therefore, the City has a number of options for deferring the adjustment until the latter part of the planning period. These options would include adjusting capital improvement timing, using more reserves for capital improvements, reducing some other operating expenses, and closely monitoring additional revenue or increased growth beyond the assumed growth rate.

The results of **Table 10-5** represent the rates remaining at the 2016 level through 2021; therefore, without any adjustments the rates are not sufficient throughout the 6-year planning period.

It is important to note that the financial plan presented in this chapter is predicated upon an assumed level of growth, and assumptions related to inflation. Should this growth increase, slow down, or not occur, the level of rate adjustment required will be affected.

Likewise, if costs escalate faster or slower than indicated in this financial plan, the projected rate adjustments shown in **Table 10-5** would also be affected.

RESERVE LEVELS

Another key indicator of a utility's financial health and viability is its reserve levels. Because a portion of the utility's revenue is consumption based, and therefore dependent upon weather conditions and usage patterns, maintaining adequate reserve levels is important for stable fiscal management of the utility. A discussion of the utility's reserves is provided below.

Industry standards (American Water Works Association – AWWA) recommend that utilities maintain working capital reserves at a level adequate to handle unexpected occurrences, including unexpected cash flow fluctuations. A minimal balance for an O&M reserve, or operating reserve, is recommended to be a minimum of 45 days (12 percent of annual) of operations and tax expenses. This is more typical for monthly billing cycles. Some utilities with bimonthly billing cycles will use 60 or 90 days as their minimum target to maintain. A minimum balance of 45 days for the City would equate to approximately $1.05 million in the first half of the planning period, increasing to $1.25 million by 2021.

Suggested financial policies indicate that a capital fund balance equal to an average year's worth of capital projects is a prudent reserve amount. When averaging the 2016 to 2021 projected capital improvements, the result appears high due to some large projects in 2012 through 2014. For the City, this minimum capital fund target would be $4.6 million.

The City currently has a combined fund balance; therefore, considering the suggested fund balance for O&M and capital would result in maintaining a balance of $5.2 million. During the test period, the balance drops below $2.5 million in 2020 and 2021 when funds are used for capital projects. Dropping below the target balance is reasonable for a year or two. Whenever possible, the fund should be replenished, which is estimated to occur in 2022.

The City will continue to watch this reserve level in future years and build to the target level whenever revenue exceeds the capital expenditures of a given year. Between the capital fund balance and the operating reserve, the utility's reserve levels appear adequate.

REVIEW OF THE EXISTING WATER RATES

There are various "generally accepted" water rate structures that can be used to establish rates.

The initial starting point in considering a rate structure is the relationship between fixed costs and variable costs. Fixed costs are generally collected as a fixed charge on a monthly basis (e.g. $5.00 per month/meter). This charge may be called by various names (e.g., customer charge, meter charge, base charge, etc.) but in all cases, it is intended to collect those fixed costs that the utility incurs.

Currently, the City has a base charge for service and a commodity charge based on usage. This charge is related to the variable costs of producing and providing water service. For a residential customer inside the city, the base charge for a 5/8–inch connection is $22.22. The commodity or usage rate is tiered, with the first tier of zero to 6,000 gallons at $1.20 per 1,000 gallons. There are different rate schedules for customers in different parts of the utility service area. Those include inside the City, the Coordinated Water Study Plan Area (CWSP) which has a 50-percent surcharge above the inside City rate, and outside the CWSP, which is twice the inside City rate. For purposes of this overview, the rates in effect as of 2016 are presented in **Table 10-6**.

Table 10-6
2016 Bi-Monthly Retail Water Rates

Meter Size Effective 1/1/16 Bi-Monthly Rates	AWWA Meter Factor	City Rate	Rural Rate	Outside UGA Rate
Tier = factor *base rate				
Multiple Residential Units (Per Unit)	N/A	$22.22	$33.34	$44.44
5/8"	1	$22.22	$33.34	$44.44
3/4"	1.5	$33.34	$49.99	$66.65
1"	2.5	$55.56	$83.33	$111.10
1-1/2"	5	$111.10	$166.65	$222.20
2"	8	$177.75	$266.64	$355.50
3"	16	$355.50	$533.26	$711.02
4"	25	$555.49	$833.24	$1,110.97
6"	50	$1,110.97	$1,666.44	$2,221.91
8"	80	$1,777.53	$2,666.31	$3,555.08
10"	115	$2,555.21	$3,832.82	$5,110.42
12"	200	$4,443.84	$6,665.76	$8,887.68

Table 10-6A

Residential & Multi-Family Effective 1/1/16 Bi-Monthly Rates	City Rate	Rural Rate	Outside UGA Rate
Volume Tiers (1,000 gal)			
0 to 6	$1.20	$1.79	$2.39
7 to 20	$4.18	$6.28	$8.37
21 to 30	$4.78	$7.16	$9.57
31 and higher	$5.38	$8.07	$10.76

Commercial Effective 1/1/16 Bi-Monthly Rates	City Rate	Rural Rate	Outside UGA Rate
Volume Tiers (1,000 gal)			
0 to 6	$1.20	$1.79	$2.39
7 and higher	$2.99	$4.49	$5.97

The utility has separate bimonthly charges for customers with private fire protection, including annual hydrant charges of $42.04 per year. Customers with automatic sprinkler systems are charged an additional bimonthly rate. These charges range from $45.73 every 2 months for a 2-inch meter to $165.19 every 2 months for a 12-inch meter.

There are also separate rate schedules for low-income senior and disabled customers that differ slightly from the rate schedules above. These customers receive a 30-percent discount from the rates of their service area.

The City bills on a bimonthly basis. However, monthly costs are usually evaluated when reviewing the affordability of a utility service cost for the average household. A monthly bill for an average City customer, using 10,000 gallons of water a month, would be $43.97.

The utility's meter charge is based on the size of the customer's meter. This approach is typically used to recognize that larger meter sizes place greater demands and capacity requirements on the system. It is common to base the meter charge rate differential on the AWWA safe operating capacity of the meter. The meter capacity approach is presented in **Table 10-6**.

Meter capacity is an important concept in that a customer with a 2-inch meter is regarded, from a capacity perspective, as the equivalent of eight 5/8 by 3/4 inch customers. Another way of saying this: a customer with a 2-inch meter is the equivalent of 8 single-family homes with 5/8 by 3/4 inch meters. Since a large portion of costs are generally related to meeting capacity requirements, one can see the importance of taking into account capacity in establishing rates for customers. When reviewing the meter charges and the allowance given for each meter size, the charges follow this basic principle.

The conceptual rate review undertaken indicates that the City's water rates capture the cost differential to serve customers with varying facility requirements. The utility also surcharges based on location and usage, and appropriate discounts for impaired customers.

OVERVIEW OF FUTURE WATER RATES

Based upon the results of the financial analysis, the City will require adjustments in rates in future years to meet the on-going operational and capital needs of the water utility system, as identified within this chapter. The City established an annual rate growth of 2 percent in 2009. This steady growth rate has allowed the City to meet the utility needs while providing minimal impact to customers. **Table 10-7** shows the level of rate adjustment at an annual 2 percent for the 6-year projected period to meet operating and capital costs as identified within this plan.

Table 10-7
Projected Six-Year Financial Plan ($000s)
includes 2% annual rate adjustment

	Budget	Projected				
	2016	2017	2018	2019	2020	2021
Sources of Funds						
Water Sales	$ 9,571	$ 9,937	$ 10,317	$ 10,713	$ 11,124	$ 11,552
Other Sources	$ 829	$ 510	$ 1,144	$ 1,160	$ 1,175	$ 1,191
Total	$ 10,400	$ 10,447	$ 11,461	$ 11,873	$ 12,299	$ 12,743
Applications of Funds						
O&M and Taxes	$ 8,754	$ 9,070	$ 9,399	$ 9,744	$ 10,104	$ 10,442
CIP Funded From Rates	$ 49	$ -	$ 472	$ 541	$ 611	$ 722
Debt Service (P+I)	$ 1,597	$ 1,594	$ 1,590	$ 1,588	$ 1,584	$ 1,579
Total	$ 10,400	$ 10,664	$ 11,461	$ 11,873	$ 12,299	$ 12,743
Balance/Deficiency of Funds	$ -	$ (217)	$ -	$ -	$ -	$ -
Plus: Additional Taxes	$ -	$ (11)	$ -	$ -	$ -	$ -
Total Bal/(Def) of Funds	$ -	$ (228)	$ -	$ -	$ -	$ -
Bal/Def as a % of Rates	0.0%	2.3%	0.0%	0.0%	0.0%	0.0%

It is important to remember that these rate adjustments are cumulative. Any increases made in the earlier years reduce the increases needed in the latter years.

SUMMARY

The financial plan results presented in this section indicate that water rates for the 6-year projected time horizon of 2016 to 2021 will require adjustments to fund the projected O&M, capital, and debt service requirements, which has been determined to be at 2 percent per year. The City has demonstrated its commitment to responsible management of the utility by past rate adjustments, its on-going utility rate study, and funding adequate levels of operations, capital, and reserves. Continued prudent fiscal management will enable the water utility to continue to operate on a financially sound basis.

Appendix: Financial Model

City of Marysville
Water Fund
Exhibit 1
Escalation Factors

ESCALATION FACTORS	2016	2017	2018	2019	2020	2021
Revenues:						
Growth	Budget	2.0%	2.0%	2.0%	2.0%	2.0%
Miscellaneous Revenues	Budget	2.0%	2.0%	2.0%	2.0%	2.0%
Interest Income Rate	Budget	0.8%	0.8%	0.8%	0.8%	0.8%
Expenses:						
Labor	Budget	4.0%	4.0%	4.0%	4.0%	4.0%
Benefits	Budget	10.0%	10.0%	10.0%	10.0%	4.0%
Materials & Supplies	Budget	2.5%	2.5%	2.5%	2.5%	2.5%
Miscellaneous	Budget	2.5%	2.5%	2.5%	2.5%	2.5%
Purchased Water	Budget	2.5%	2.5%	2.5%	2.5%	2.5%

City of Marysville						
Water Fund Exhibit 2						
Sources & Application of Funds						
	2016	2017	2018	2019	2020	2021
SOURCES OF FUNDS						
40100362 325000 LONG TERM LEASE	58,000	58,000	58,000	58,000	58,000	58,000
40100366 362000 INTERFUND RENTS	21,400	21,400	21,400	21,400	21,400	21,400
40142343 334010 WATER-CUSTOMER ACCTS	9,047,000	9,412,500	9,792,800	10,188,400	10,600,000	11,028,200
40142343 334011 WATER-CONNECTIONS	428,542	110,000	744,000	759,500	775,000	790,500
40142343 334012 WATER-MISC SERV REV	318,300	318,300	318,300	318,300	318,300	318,300
40142343 334049 WATER-WATCHDOG ADM FEE	2,900	2,900	2,900	2,900	2,900	2,900
40142343 334064 WATER-TREATED FOR RESALE	0	0	0	0	0	0
40142343 334072 OTHER PUBLIC AUTHORITIES	523,500	523,500	523,500	523,500	523,500	523,500
TOTAL OPERATING REVENUE	10,399,642	10,446,600	11,460,900	11,872,000	12,299,100	12,742,800
USE OF FUNDS						
OPERATING EXPENDITURES						
411 UTILITY LOCATING						
40141180 511000 REGULAR PAY	52,800	54,900	57,100	59,400	61,800	64,300
40141180 512000 OVERTIME	300	300	300	400	400	400
40141180 521000 SOCIAL SECURITY	4,000	4,100	4,300	4,400	4,600	4,800
40141180 522000 RETIREMENT	5,300	5,500	5,700	6,000	6,200	6,500
40141180 523000 HEALTH INSURANCE	10,800	11,900	13,100	14,400	15,800	16,500
40141180 524000 WORKMAN'S COMP	1,800	1,900	1,900	2,000	2,000	2,100
40141180 525000 UNEMPLOYMENT COMPENSATION	200	200	200	200	200	200
40141180 531000 OFFICE & OPERATING SUPPLIE	3,100	3,200	3,200	3,300	3,400	3,500
40141180 535000 SMALL TOOLS	500	500	500	600	600	600
40141180 541000 PROFESSIONAL SERVICES	2,600	2,600	2,700	2,800	2,800	2,900
40141180 545000 OPERATING RENTALS & LEASES	0	0	0	0	0	0
40141180 549000 MISCELLANEOUS	300	300	300	300	300	300
SUBTOTAL 411 UTILITY LOCATING	81,700	85,400	89,300	93,800	98,100	102,100
412 METER READING						
40141280 511000 REGULAR PAY	9,000	9,400	9,800	10,200	10,600	11,000
40141280 512000 OVERTIME	200	200	200	200	200	300
40141280 521000 SOCIAL SECURITY	700	800	800	800	900	900
40141280 522000 RETIREMENT	900	1,000	1,000	1,100	1,100	1,100
40141280 523000 HEALTH INSURANCE	1,900	2,100	2,300	2,600	2,800	3,000
40141280 524000 WORKMAN'S COMP	300	300	300	300	300	300
40141280 525000 UNEMPLOYMENT COMPENSATION	0	0	0	0	0	0
40141280 531000 OFFICE & OPERATING SUPPLIE	1,900	2,000	2,000	2,100	2,100	2,200
40141280 535000 SMALL TOOLS	500	500	500	600	600	600
40141280 541000 PROFESSIONAL SERVICES	29,000	29,700	30,500	31,200	32,000	32,800
40141280 542000 COMMUNICATION	5,300	5,500	5,600	5,700	5,900	6,000
SUBTOTAL 412 METER READING	49,700	51,500	53,000	54,800	56,500	58,200
430 STANDBY						
40143010 511000 REGULAR PAY	10,400	10,800	11,200	11,700	12,200	12,700
40143010 512000 OVERTIME	26,000	27,000	28,100	29,200	30,400	31,600
40143010 521000 SOCIAL SECURITY	800	900	900	900	1,000	1,000
40143010 522000 RETIREMENT	800	900	900	900	1,000	1,000
40143010 523000 HEALTH INSURANCE	2,000	2,200	2,500	2,700	3,000	3,100
40143010 524000 WORKMAN'S COMP	300	300	300	300	300	300
40143010 525000 UNEMPLOYMENT COMPENSATION	0	0	0	0	0	0
SUBTOTAL 430 STANDBY	40,300	42,100	43,900	45,700	47,900	49,700

	2016	2017	2018	2019	2020	2021
431 UTILITIES ENGR						
40143110 511000 REGULAR PAY	0	0	0	0	0	0
40143110 521000 SOCIAL SECURITY	0	0	0	0	0	0
40143110 522000 RETIREMENT	0	0	0	0	0	0
40143110 523000 HEALTH INSURANCE	0	0	0	0	0	0
40143110 524000 WORKMAN'S COMP	100	100	100	100	100	100
40143110 525000 UNEMPLOYMENT COMPENSATION	0	0	0	0	0	0
40143110 541000 PROFESSIONAL SERVICES	0	0	0	0	0	0
SUBTOTAL 431 UTILITIES ENGR	100	100	100	100	100	100
432 PLANNING						
40143210 511000 REGULAR PAY	182,300	189,600	197,200	205,100	213,300	221,800
40143210 512000 OVERTIME	500	500	600	600	600	600
40143210 521000 SOCIAL SECURITY	12,400	12,900	13,400	13,900	14,500	15,100
40143210 522000 RETIREMENT	16,200	16,900	17,500	18,200	19,000	19,700
40143210 523000 HEALTH INSURANCE	28,200	31,000	34,100	37,500	41,200	42,900
40143210 524000 WORKMEN'S COMPENSATION	2,500	2,500	2,600	2,600	2,700	2,800
40143210 525000 UNEMPLOYMENT COMPENSATION	500	500	500	600	600	600
40143210 531000 OFFICE & OPERATING SUPPLIE	500	500	500	600	600	600
40143210 535000 SMALL TOOLS	200	200	200	200	200	200
40143210 542000 COMMUNICATION	200	200	200	200	200	200
40143210 543000 TRAVEL	200	200	200	200	200	200
40143210 549000 MISCELLANEOUS	0	0	0	0	0	0
SUBTOTAL 432 PLANNING	243,700	255,000	267,000	279,700	293,100	304,700
433 OVERHEAD						
40143310 511000 REGULAR PAY	245,400	255,300	265,500	276,100	287,100	298,600
40143310 512000 OVERTIME	2,400	2,500	2,600	2,700	2,800	2,900
40143310 521000 SOCIAL SECURITY	18,500	19,300	20,000	20,800	21,700	22,500
40143310 522000 RETIREMENT	24,400	25,400	26,400	27,500	28,600	29,700
40143310 523000 HEALTH INSURANCE	61,200	67,300	74,100	81,500	89,600	93,200
40143310 524000 WORKMAN'S COMP	8,100	8,300	8,500	8,700	8,900	9,200
40143310 525000 UNEMPLOYMENT COMPENSATION	800	800	900	900	900	900
SUBTOTAL 433 OVERHEAD	360,800	378,900	398,000	418,200	439,600	457,000

	2016	2017	2018	2019	2020	2021
434 UTIL ADMIN						
New Personnel	0	0	0	0	0	0
New Admin-Executive Consolidated Expense	29,600	30,400	31,100	31,900	32,700	33,500
40143410 511000 REGULAR PAY	344,800	358,600	372,900	387,800	403,300	419,500
40143410 512000 OVERTIME	1,100	1,200	1,200	1,300	1,300	1,400
40143410 521000 SOCIAL SECURITY	25,000	26,000	27,000	28,100	29,200	30,400
40143410 522000 RETIREMENT	34,800	36,200	37,700	39,200	40,800	42,400
40143410 523000 HEALTH INSURANCE	69,000	75,800	83,400	91,800	101,000	105,000
40143410 524000 WORKMAN'S COMP	4,300	4,400	4,500	4,600	4,800	4,900
40143410 525000 UNEMPLOYMENT COMPENSATION	1,100	1,200	1,200	1,200	1,200	1,300
40143410 526000 UNIFORMS & CLOTHINGS	600	600	600	700	700	700
40143410 526100 UNIFORMS-MAINT CREW	2,300	2,300	2,400	2,400	2,500	2,600
40143410 526200 UNIFORMS-CONSTR CREW	2,400	2,400	2,500	2,500	2,600	2,700
40143410 526300 UNIFORMS-WWTP CREW	2,400	2,400	2,500	2,500	2,600	2,700
40143410 531000 OFFICE & OPERATING SUPPLIE	27,100	27,700	28,400	29,100	29,900	30,600
40143410 531200 JANITORIAL SUPPLIES	1,400	1,500	1,500	1,500	1,600	1,600
40143410 534000 INVENTORY SUPPLIES	2,400	2,400	2,500	2,500	2,600	2,700
40143410 535000 SMALL TOOLS	1,500	1,600	1,600	1,700	1,700	1,700
40143410 541000 PROFESSIONAL SERVICES	140,300	143,800	147,400	151,100	154,900	158,800
40143410 542000 COMMUNICATION	10,300	10,500	10,800	11,000	11,300	11,600
40143410 543010 TRAVEL-MGMT & OFFICE	1,400	1,500	1,500	1,500	1,600	1,600
40143410 543020 TRAVEL-MAINT	1,400	1,500	1,500	1,500	1,600	1,600
40143410 543030 TRAVEL-CONSTRUCTION	1,400	1,500	1,500	1,500	1,600	1,600
40143410 543040 TRAVEL-WWTP	1,100	1,200	1,200	1,200	1,200	1,300
40143410 544000 ADVERTISING	500	500	500	600	600	600
40143410 545000 OPERATING RENTALS & LEASES	4,600	4,700	4,800	5,000	5,100	5,200
40143410 546000 INSURANCE	147,500	151,200	155,000	158,800	162,800	166,900
40143410 547000 PUBLIC UTILITY SERVICES	100	100	100	100	100	100
40143410 548000 REPAIRS & MAINTENANCE	4,500	4,600	4,700	4,900	5,000	5,100
40143410 549000 MISCELLANEOUS	48,900	50,100	51,400	52,700	54,000	55,300
40143410 549020 TRAINING-MGMT& OFFICE	2,100	2,100	2,200	2,200	2,300	2,300
40143410 549030 TRAINING-MAINT	3,300	3,400	3,400	3,500	3,600	3,700
40143410 549040 TRAINING-CONSTR	2,100	2,100	2,200	2,200	2,300	2,300
40143410 549050 TRAINING-WWTP	2,300	2,300	2,400	2,400	2,500	2,600
40143410 549060 TRAINING-SAFETY OFFICER	2,200	2,200	2,300	2,300	2,400	2,400
40143410 549070 WATER REBATE	4,700	4,800	5,000	5,100	5,200	5,300
40143410 549071 SEWER REBATE	0	0	0	0	0	0
40143410 549700 DRUG TESTING	2,800	2,800	2,900	3,000	3,100	3,100
40143410 553000 STATE TAXES	501,000	520,000	539,800	560,200	581,500	603,700
40143410 553100 OPERATING PERMITS-WTR	21,500	22,100	22,600	23,200	23,800	24,400
40143410 553200 OPERATING PERMITS-WTR	0	0	0	0	0	0
40143410 553300 CITY TAXES-EXCISE	749,200	778,500	808,900	840,500	873,500	907,700
40143410 554300 CITY TAXES-PROPERTY	270,600	277,400	284,300	291,400	298,700	306,200
40143410 599000 04ACT FIN/ACCT ALLOCATION	257,600	264,000	270,600	277,400	284,300	291,400
40143410 599000 04CC FINANCE - CITY CLERK	24,200	24,800	25,400	26,000	26,700	27,400
40143410 599000 04IT IT ALLOCATION	47,900	49,100	50,300	51,500	52,800	54,200
40143410 599000 04TEL NEXTEL ALLOCATION	0	0	0	0	0	0
40143410 599000 04UB UTILITY BILLING	282,300	289,300	296,600	304,000	311,600	319,400
SUBTOTAL 434 UTIL ADMIN	3,085,600	3,190,800	3,300,300	3,413,600	3,532,600	3,649,500

	2016	2017	2018	2019	2020	2021
437 MAINT OF GENL PLANT						
40143780 511000 REGULAR PAY	23,900	24,900	25,900	26,900	28,000	29,100
40143780 512000 OVERTIME	200	200	200	200	200	300
40143780 521000 SOCIAL SECURITY	1,800	1,800	1,900	2,000	2,100	2,200
40143780 522000 RETIREMENT	2,400	2,500	2,600	2,700	2,800	2,900
40143780 523000 HEALTH INSURANCE	4,000	4,400	4,800	5,300	5,800	6,100
40143780 524000 WORKMAN'S COMP	700	700	800	800	800	800
40143780 525000 UNEMPLOYMENT COMPENSATION	100	100	100	100	100	100
40143780 531000 OFFICE & OPERATING SUPPLIE	4,400	4,500	4,600	4,700	4,900	5,000
40143780 535000 SMALL TOOLS	300	300	300	300	300	300
40143780 541000 PROFESSIONAL SERVICES	5,100	5,300	5,400	5,500	5,700	5,800
40143780 542000 COMMUNICATION	500	500	500	600	600	600
40143780 547000 PUBLIC UTILITY SERVICES	27,700	29,100	30,600	32,100	33,700	35,400
40143780 548000 REPAIRS & MAINTENANCE	31,700	32,500	33,300	34,100	35,000	35,800
40143780 549000 MISCELLANEOUS	3,400	3,500	3,600	3,600	3,700	3,800
40143780 598100 FACILITIES MAINTENANCE	50,900	52,200	53,500	54,900	56,200	57,600
SUBTOTAL 437 MAINT OF GENL PLANT	157,100	162,500	168,100	173,800	179,900	185,800
438 MAINT OF EQUIPMENT						
40143880 532000 FUEL CONSUMED	45,700	46,900	48,000	49,200	50,500	51,700
40143880 598000 INTERFUND REPAIRS & MAINT	126,100	129,200	132,500	135,800	139,200	142,600
40143880 548000 INTERFUND REPAIRS & MAINT	6,800	6,900	7,100	7,300	7,500	7,700
SUBTOTAL 438 MAINT OF EQUIPMENT	178,600	183,000	187,600	192,300	197,200	202,000
439 CAPITAL OUTLAY						
40143900 500000 INTERFUND TRANSFER	32,200	33,000	33,800	34,700	35,500	36,400
40143980 549000 MISCELLANEOUS	0	0	0	0	0	0
40143980 562000 BUILDINGS & STRUCTURES	0	0	0	0	0	0
SUBTOTAL 439 CAPITAL OUTLAY	32,200	33,000	33,800	34,700	35,500	36,400
400 SOURCE OF SUPPLY						
40140080 511000 REGULAR PAY	109,100	113,500	118,000	122,700	127,600	132,700
40140080 512000 OVERTIME	200	200	200	200	200	300
40140080 521000 SOCIAL SECURITY	8,100	8,400	8,800	9,100	9,500	9,900
40140080 522000 RETIREMENT	11,000	11,500	11,900	12,400	12,900	13,400
40140080 523000 HEALTH INSURANCE	30,300	33,300	36,700	40,300	44,400	46,100
40140080 524000 WORKMAN'S COMP	3,600	3,700	3,800	3,900	4,000	4,100
40140080 525000 UNEMPLOYMENT COMPENSATION	300	300	300	300	300	300
40140080 531000 OFFICE & OPERATING SUPPLIE	2,100	2,100	2,200	2,200	2,300	2,300
40140080 533000 PURCHASED WATER	1,974,400	2,023,700	2,074,300	2,126,200	2,179,300	2,233,800
40140080 535000 SMALL TOOLS	500	500	500	600	600	600
40140080 541000 PROFESSIONAL SERVICES	5,100	5,300	5,400	5,500	5,700	5,800
40140080 542000 COMMUNICATION	1,000	1,100	1,100	1,100	1,100	1,200
40140080 547000 PUBLIC UTILITY SERVICES	7,500	8,000	8,600	9,200	9,900	10,600
40140080 548000 REPAIRS & MAINTENANCE	40,900	41,900	43,000	44,000	45,100	46,300
40140080 549000 MISCELLANEOUS	500	500	500	600	600	600
SUBTOTAL 400 SOURCE OF SUPPLY	2,194,600	2,254,000	2,315,300	2,378,300	2,443,500	2,508,000

	2016	2017	2018	2019	2020	2021
401 PUMPING PLANT						
40140180 511000 REGULAR PAY	39,900	41,500	43,200	44,900	46,700	48,600
40140180 512000 OVERTIME	500	500	600	600	600	600
40140180 521000 SOCIAL SECURITY	3,000	3,100	3,300	3,400	3,500	3,700
40140180 522000 RETIREMENT	4,100	4,200	4,400	4,600	4,700	4,900
40140180 523000 HEALTH INSURANCE	12,400	13,700	15,100	16,600	18,200	18,900
40140180 524000 WORKMAN'S COMP	1,300	1,400	1,400	1,400	1,500	1,500
40140180 525000 UNEMPLOYMENT COMPENSATION	100	100	100	100	100	100
40140180 531000 OFFICE & OPERATING SUPPLIE	9,600	9,900	10,100	10,400	10,600	10,900
40140180 535000 SMALL TOOLS	500	500	500	600	600	600
40140180 541000 PROFESSIONAL SERVICES	1,000	1,100	1,100	1,100	1,100	1,200
40140180 542000 COMMUNICATION	200	200	200	200	200	200
40140180 547000 PUBLIC UTILITY SERVICES	73,900	79,100	84,800	90,800	97,200	104,100
40140180 548000 REPAIRS & MAINTENANCE	26,000	27,000	28,100	29,200	30,400	31,600
SUBTOTAL 401 PUMPING PLANT	172,500	182,300	192,900	203,900	215,400	226,900
402 WATER RESERVOIRS						
40140280 511000 REGULAR PAY	74,500	77,400	80,500	83,800	87,100	90,600
40140280 512000 OVERTIME	300	300	300	400	400	400
40140280 521000 SOCIAL SECURITY	5,600	5,800	6,100	6,300	6,600	6,800
40140280 522000 RETIREMENT	7,000	7,200	7,500	7,800	8,200	8,500
40140280 523000 HEALTH INSURANCE	13,300	14,600	16,000	17,600	19,400	20,200
40140280 524000 WORKMAN'S COMP	2,600	2,600	2,700	2,800	2,800	2,900
40140280 525000 UNEMPLOYMENT COMPENSATION	200	200	200	200	200	200
40140280 531000 OFFICE & OPERATING SUPPLIE	7,200	7,400	7,500	7,700	7,900	8,100
40140280 535000 SMALL TOOLS	500	500	500	600	600	600
40140280 541000 PROFESSIONAL SERVICES	6,000	6,200	6,400	6,500	6,700	6,800
40140280 542000 COMMUNICATION	0	0	0	0	0	0
40140280 548000 REPAIRS & MAINTENANCE	24,500	25,100	25,700	26,400	27,000	27,700
40140280 549000 MISCELLANEOUS	8,200	8,400	8,600	8,800	9,100	9,300
SUBTOTAL 402 WATER RESERVOIRS	149,900	155,700	162,000	168,900	176,000	182,100
403 WATER SUPPLY MAINS						
40140380 511000 REGULAR PAY	46,400	48,200	50,200	52,200	54,300	56,400
40140380 512000 OVERTIME	1,400	1,400	1,500	1,500	1,600	1,600
40140380 521000 SOCIAL SECURITY	3,500	3,700	3,800	4,000	4,100	4,300
40140380 522000 RETIREMENT	4,200	4,300	4,500	4,700	4,900	5,100
40140380 523000 HEALTH INSURANCE	8,800	9,600	10,600	11,700	12,800	13,400
40140380 524000 WORKMAN'S COMP	1,400	1,500	1,500	1,500	1,600	1,600
40140380 525000 UNEMPLOYMENT COMPENSATION	200	200	200	200	200	200
40140380 531000 OFFICE & OPERATING SUPPLIE	3,100	3,200	3,200	3,300	3,400	3,500
40140380 541000 PROFESSIONAL SERVICES	2,200	2,200	2,300	2,300	2,400	2,400
40140380 542000 COMMUNICATION	200	200	200	200	200	200
40140380 548000 REPAIRS & MAINTENANCE	5,600	5,800	5,900	6,100	6,200	6,400
40140380 549000 MISCELLANEOUS	100	100	100	100	100	100
SUBTOTAL 403 WATER SUPPLY MAINS	77,100	80,400	84,000	87,800	91,800	95,200
404 WATER DIST MAINS						
40140480 511000 REGULAR PAY	461,300	479,800	499,000	518,900	539,700	561,300
40140480 512000 OVERTIME	4,400	4,500	4,700	4,900	5,100	5,300
40140480 521000 SOCIAL SECURITY	34,600	36,000	37,500	39,000	40,500	42,100
40140480 522000 RETIREMENT	46,400	48,200	50,200	52,200	54,300	56,400
40140480 523000 HEALTH INSURANCE	100,200	110,200	121,200	133,300	146,600	152,500
40140480 524000 WORKMAN'S COMP	15,100	15,400	15,800	16,200	16,600	17,000
40140480 525000 UNEMPLOYMENT COMPENSATION	1,500	1,600	1,600	1,700	1,700	1,700
40140480 531000 OFFICE & OPERATING SUPPLIE	65,700	67,300	69,000	70,800	72,500	74,300
40140480 535000 SMALL TOOLS	1,000	1,100	1,100	1,100	1,100	1,200
40140480 541000 PROFESSIONAL SERVICES	1,000	1,100	1,100	1,100	1,100	1,200
40140480 548000 REPAIRS & MAINTENANCE	5,100	5,300	5,400	5,500	5,700	5,800
40140480 549000 MISCELLANEOUS	500	500	500	600	600	600

	2016	2017	2018	2019	2020	2021
405 WATER SERVICES						
40140580 511000 REGULAR PAY	118,500	123,200	128,100	133,200	138,600	144,100
40140580 512000 OVERTIME	1,600	1,600	1,700	1,800	1,800	1,900
40140580 521000 SOCIAL SECURITY	8,800	9,200	9,600	9,900	10,300	10,800
40140580 522000 RETIREMENT	11,400	11,900	12,400	12,900	13,400	13,900
40140580 523000 HEALTH INSURANCE	26,400	29,100	32,000	35,200	38,700	40,200
40140580 524000 WORKMAN'S COMP	4,100	4,200	4,300	4,400	4,500	4,600
40140580 525000 UNEMPLOYMENT COMPENSATION	400	400	400	400	500	500
40140580 531000 OFFICE & OPERATING SUPPLIE	90,600	92,900	95,200	97,600	100,000	102,500
40140580 535000 SMALL TOOLS	1,500	1,600	1,600	1,700	1,700	1,700
40140580 541000 PROFESSIONAL SERVICES	200	200	200	200	200	200
40140580 548000 REPAIRS & MAINTENANCE	5,100	5,300	5,400	5,500	5,700	5,800
40140580 549000 MISCELLANEOUS	5,100	5,300	5,400	5,500	5,700	5,800
SUBTOTAL 405 WATER SERVICES	273,700	284,900	296,300	308,300	321,100	332,000
406 HYDRANTS						
40140680 511000 REGULAR PAY	58,200	60,600	63,000	65,500	68,100	70,900
40140680 512000 OVERTIME	500	500	600	600	600	600
40140680 521000 SOCIAL SECURITY	4,800	5,000	5,200	5,400	5,600	5,800
40140680 522000 RETIREMENT	5,300	5,500	5,700	6,000	6,200	6,500
40140680 523000 HEALTH INSURANCE	11,200	12,300	13,600	14,900	16,400	17,100
40140680 524000 WORKMAN'S COMP	1,700	1,800	1,800	1,900	1,900	2,000
40140680 525000 UNEMPLOYMENT COMPENSATION	200	200	200	200	200	200
40140680 531000 OFFICE & OPERATING SUPPLIE	8,200	8,400	8,600	8,800	9,100	9,300
SUBTOTAL 406 HYDRANTS	90,100	94,300	98,700	103,300	108,100	112,400
407 WATER QUAL TREATMENT						
40140780 511000 REGULAR PAY	65,300	67,900	70,600	73,500	76,400	79,500
40140780 512000 OVERTIME	500	500	600	600	600	600
40140780 521000 SOCIAL SECURITY	4,900	5,100	5,300	5,500	5,700	5,900
40140780 522000 RETIREMENT	6,600	6,800	7,100	7,400	7,700	8,000
40140780 523000 HEALTH INSURANCE	17,100	18,800	20,700	22,800	25,100	26,100
40140780 524000 WORKMAN'S COMP	2,100	2,100	2,200	2,200	2,300	2,300
40140780 525000 UNEMPLOYMENT COMPENSATION	200	200	200	200	200	200
40140780 531000 OFFICE & OPERATING SUPPLIE	18,500	18,900	19,400	19,900	20,400	20,900
40140780 531001 TREATMENT PLANT CHEMICAL	20,500	21,000	21,500	22,100	22,600	23,200
40140780 535000 SMALL TOOLS	3,100	3,200	3,200	3,300	3,400	3,500
40140780 541000 PROFESSIONAL SERVICES	56,400	57,800	59,200	60,700	62,200	63,800
40140780 548000 REPAIRS & MAINTENANCE	16,200	16,600	17,000	17,400	17,900	18,300
SUBTOTAL 407 WATER QUAL TREATMENT	211,400	218,900	227,000	235,600	244,500	252,300
408 WATER CROSS CNTL						
40140880 511000 REGULAR PAY	68,800	71,600	74,500	77,400	80,500	83,800
40140880 512000 OVERTIME	1,000	1,100	1,100	1,200	1,200	1,300
40140880 521000 SOCIAL SECURITY	5,200	5,400	5,600	5,800	6,100	6,300
40140880 522000 RETIREMENT	7,000	7,200	7,500	7,800	8,200	8,500
40140880 523000 HEALTH INSURANCE	10,100	11,100	12,200	13,400	14,800	15,400
40140880 524000 WORKMAN'S COMP	2,200	2,200	2,300	2,300	2,400	2,400
40140880 525000 UNEMPLOYMENT COMPENSATION	200	200	200	200	200	200
40140880 531000 OFFICE & OPERATING SUPPLIE	13,300	13,700	14,000	14,300	14,700	15,100
40140880 541000 PROFESSIONAL SERVICES	1,000	1,100	1,100	1,100	1,100	1,200
SUBTOTAL 408 WATER CROSS CNTL	108,800	113,600	118,500	123,500	129,200	134,200

	2016	2017	2018	2019	2020	2021
409 WATER SERVICE INSTALL						
40140980 511000 REGULAR PAY	26,300	27,400	28,500	29,600	30,800	32,000
40140980 512000 OVERTIME	500	500	600	600	600	600
40140980 521000 SOCIAL SECURITY	2,400	2,500	2,600	2,700	2,800	2,900
40140980 522000 RETIREMENT	2,100	2,200	2,200	2,300	2,400	2,500
40140980 523000 HEALTH INSURANCE	5,200	5,700	6,300	6,900	7,600	7,900
40140980 524000 WORKMAN'S COMP	600	600	600	700	700	700
40140980 525000 UNEMPLOYMENT COMPENSATION	100	100	100	100	100	100
40140980 531000 OFFICE & OPERATING SUPPLIE	25,600	26,300	26,900	27,600	28,300	29,000
40140980 535000 SMALL TOOLS	500	500	500	600	600	600
40140980 541000 PROFESSIONAL SERVICES	0	0	0	0	0	0
40140980 548000 REPAIRS & MAINTENANCE	1,000	1,100	1,100	1,100	1,100	1,200
SUBTOTAL 409 WATER SERVICE INSTALL	64,300	66,900	69,400	72,200	75,000	77,500
410 HYDRANTS INSTALL						
40141080 511000 REGULAR PAY	22,000	22,900	23,800	24,800	25,800	26,800
40141080 512000 OVERTIME	0	0	0	0	0	0
40141080 521000 SOCIAL SECURITY	1,700	1,700	1,800	1,900	1,900	2,000
40141080 522000 RETIREMENT	2,200	2,300	2,400	2,500	2,600	2,700
40141080 523000 HEALTH INSURANCE	4,900	5,400	5,900	6,500	7,200	7,500
40141080 524000 WORKMAN'S COMP	700	700	800	800	800	800
40141080 525000 UNEMPLOYMENT COMPENSATION	100	100	100	100	100	100
40141080 531000 OFFICE & OPERATING SUPPLIE	15,400	15,800	16,200	16,600	17,000	17,400
40141080 535000 SMALL TOOLS	500	500	500	600	600	600
40141080 548000 REPAIRS & MAINTENANCE	5,100	5,300	5,400	5,500	5,700	5,800
SUBTOTAL 410 HYDRANTS INSTALL	52,600	54,700	56,900	59,300	61,700	63,700
413 WATER MAINS INSTALL						
40141380 511000 REGULAR PAY	32,900	34,200	35,500	37,000	38,400	40,000
40141380 512000 OVERTIME	500	500	600	600	600	600
40141380 521000 SOCIAL SECURITY	2,900	3,000	3,100	3,300	3,400	3,500
40141380 522000 RETIREMENT	2,800	2,900	3,000	3,200	3,300	3,400
40141380 523000 HEALTH INSURANCE	7,700	8,400	9,300	10,200	11,200	11,600
40141380 524000 WORKMAN'S COMP	900	900	1,000	1,000	1,000	1,000
40141380 525000 UNEMPLOYMENT COMPENSATION	100	100	100	100	100	100
40141380 531000 OFFICE & OPERATING SUPPLIE	5,400	5,600	5,700	5,900	6,000	6,100
40141380 548000 REPAIRS & MAINTENANCE	700	700	800	800	800	800
40141380 549000 MISCELLANEOUS	16,500	16,900	17,300	17,800	18,200	18,700
SUBTOTAL 413 WATER MAINS INSTALL	70,400	73,200	76,400	79,900	83,000	85,800
414 WATER OPS SUPERVISOR						
40141480 511000 REGULAR PAY	101,800	105,900	110,100	114,500	119,100	123,900
40141480 521000 SOCIAL SECURITY	7,700	8,000	8,300	8,700	9,000	9,400
40141480 522000 RETIREMENT	10,300	10,700	11,100	11,600	12,000	12,500
40141480 523000 HEALTH INSURANCE	10,400	11,400	12,600	13,800	15,200	15,800
40141480 524000 WORKMAN'S COMP	2,200	2,200	2,300	2,300	2,400	2,400
40141480 525000 UNEMPLOYMENT COMPENSATION	300	300	300	300	300	300
SUBTOTAL 414 WATER OPS SUPERVISOR	132,700	138,500	144,700	151,200	158,000	164,300

	2016	2017	2018	2019	2020	2021
415 WATER FILTRATION PLANT						
40141580 511000 REGULAR PAY	33,000	34,300	35,700	37,100	38,600	40,100
40141580 512000 OVERTIME	500	500	600	600	600	600
40141580 521000 SOCIAL SECURITY	2,500	2,600	2,700	2,800	2,900	3,000
40141580 522000 RETIREMENT	3,300	3,500	3,600	3,700	3,900	4,000
40141580 523000 HEALTH INSURANCE	9,900	10,900	12,000	13,200	14,500	15,100
40141580 524000 WORKMEN'S COMPENSATION	1,000	1,100	1,100	1,100	1,100	1,200
40141580 525000 UNEMPLOYMENT COMPENSATION	100	100	100	100	100	100
40141580 531000 OFFICE & OPERATING SUPPLIE	3,600	3,700	3,800	3,900	4,000	4,100
40141580 531300 MAINT SUPPLIES-WWTP	4,400	4,500	4,600	4,700	4,900	5,000
40141580 531320 CHEMICALS -WWTP	7,600	8,000	8,300	8,700	9,100	9,500
40141580 535000 SMALL TOOLS	1,000	1,100	1,100	1,100	1,100	1,200
40141580 541000 PROFESSIONAL SERVICES	3,500	3,600	3,700	3,800	3,800	3,900
40141580 542000 COMMUNICATION	1,000	1,100	1,100	1,100	1,100	1,200
40141580 547000 PUBLIC UTILITY SERVICE	75,000	80,300	86,000	92,100	98,600	105,600
40141580 548000 REPAIRS & MAINTENANCE	41,400	42,400	43,500	44,600	45,700	46,900
40141580 549000 MISCELLANEOUS	1,000	1,100	1,100	1,100	1,100	1,200
SUBTOTAL 415 WATER FILTRATION PLANT	188,800	198,800	209,000	219,700	231,100	242,700
TOTAL OPERATING EXPENSES	8,753,500	9,069,500	9,399,300	9,743,900	10,104,400	10,442,000
NET INCOME	1,646,142	1,377,100	2,061,600	2,128,100	2,194,700	2,300,800
DEBT PAYMENTS						
STILLAGAUMISH WATER SYSTEM IMP. (DWRF FED.)	249,100	245,800	242,400	238,100	235,700	232,400
WATER REVENUE BONDS	1,347,800	1,348,000	1,347,500	1,348,500	1,348,300	1,346,000
SUBTOTAL DEBT PAYMENTS	1,596,900	1,593,800	1,589,900	1,586,600	1,584,000	1,578,400
NET INCOME LESS DEBT PAYMENTS	49,242	-216,700	471,700	541,500	610,700	722,400

Project	2016	2017	2018	2019	2020	2021
W1302 Sunnyside Well Treatment	5,600,000	0	0	0	0	0
W1504 Edward springs Water Right Util	500,000	0	0	0	0	0
W0903 Highway 9 Reservoir	0	0	0	2,423,000	0	0
W0000 Watermain Oversizing	35,000	35,900	36,800	37,700	38,600	0
W17XX Soper Hill (Whiskey Ridge)	0	0	0	0	0	3,462,100
W17XX Soper Hill (Whiskey Ridge)	0	0	0	1,141,500	0	0
W18XX 45 Road Water main - 140th	0	0	0	0	4,967,100	0
W17XX Soper Hill (Whiskey Ridge)	0	0	0	2,164,500	0	0
W1403 Fire Hydrant Replacement Prgm	75,000	76,900	78,800	80,800	82,800	84,900
W R&R Water Main R&R	0	169,100	173,400	177,700	182,100	0
W17XX State Ave (102nd to 116th)	0	3,044,300	0	0	0	0
TOTAL CAPITAL OUTLAYS	6,210,000	3,326,200	289,000	6,025,200	5,270,600	3,547,000

	Budget	Projected				
	2016	2017	2018	2019	2020	2021
Balance/Deficiency of Funds	$ (1,152,158)	$ (1,605,200)	$ (1,090,600)	$ (1,206,100)	$ (1,330,700)	$ (1,425,600)
Plus: Additional Taxes	$ (57,608)	$ (80,260)	$ (54,530)	$ (60,305)	$ (66,535)	$ (71,280)
Total Bal/(Def) of Funds	$ (1,209,766)	$ (1,685,460)	$ (1,145,130)	$ (1,266,405)	$ (1,397,235)	$ (1,496,880)
Bal/Def as a % of Rates	14.5%	19.8%	13.2%	14.2%	15.4%	16.1%
Proposed Rate Adjustment	2.0%	2.0%	2.0%	2.0%	2.0%	2.0%
Add'l rate revenue from proposed adjustment	$ 1,224,400	$ 1,412,500	$ 1,611,800	$ 1,822,900	$ 2,046,300	$ 2,282,500
Balance /Deficiency after adjustment	$ 14,634	$ (272,960)	$ 466,670	$ 556,495	$ 649,065	$ 785,620
Average Residential Customer Rate (Monthly Cost) (10,000 gallons/month)						
Projected Customer Rate	$ 62.86	$ 64.12	$ 65.40	$ 66.71	$ 68.04	$ 69.40
Rate Difference - Monthly	$ 1.19	$ 1.26	$ 1.28	$ 1.31	$ 1.33	$ 1.36
Debt Service Coverage Ratio (All Debt)						
Before Projected Rate Adjustment	0.92	0.66	1.00	0.95	0.90	0.87
After Projected Rate Adjustment	1.68	1.54	2.02	2.10	2.19	2.31

Reserve Funds	2016	2017	2018	2019	2020	2021
Operating Reserve						
Beginning Balance	2,098,042	2,098,042	2,098,042	2,098,042	2,098,042	2,098,042
Plus: Additions						
+/- Change in Working Capital						
Less Uses of Funds						
Ending Balance	2,098,042	2,098,042	2,098,042	2,098,042	2,098,042	2,098,042
Minimum Target	1,076,363	1,115,199	1,152,715	1,191,896	1,232,815	1,270,714
Capital Reserve						
Beginning Balance	8,516,958	4,583,700	3,300,000	5,784,300	2,658,600	392,700
Plus: Additions	2,227,500	2,259,200	2,301,600	2,359,000	2,394,000	2,432,500
+/- Change in Working Capital	49,242	-216,700	471,700	540,500	610,700	721,800
Less Uses of Funds	-6,210,000	-3,326,200	-289,000	-6,025,200	-5,270,600	-3,547,000
Ending Balance	4,583,700	3,300,000	5,784,300	2,658,600	392,700	0
Minimum Target	4,100,000	4,100,000	4,100,000	4,100,000	4,100,000	4,100,000
Typical/Minimum Reserve Levels						
Operating Reserve - 45 Days O&M	1,076,363	1,115,199	1,152,715	1,191,896	1,232,815	1,270,714
Capital Reserve - 6-year Average Annual CIP	4,100,000	4,100,000	4,100,000	4,100,000	4,100,000	4,100,000
Total Target Reserves	5,176,363	5,215,199	5,252,715	5,291,896	5,332,815	5,370,714

APPENDIX A

Water Facilities Inventory (WFI) Form

WATER FACILITIES INVENTORY (WFI) FORM

Washington State Department of Health
Division of Environmental Health
Office of Drinking Water

ONE FORM PER SYSTEM

Quarter: 1
Updated: 04/02/2014
Printed: 6/20/2014
WFI Printed For: On-Demand
Submission Reason: Treatment

RETURN TO: Northwest Regional Office, 20425 72nd Ave S STE 310, Kent, WA, 98032

1. SYSTEM ID NO.	2. SYSTEM NAME	3. COUNTY	4. GROUP	5. TYPE
51900 C	MARYSVILLE UTILITIES	SNOHOMISH	A	Comm

6. PRIMARY CONTACT NAME & MAILING ADDRESS	7. OWNER NAME & MAILING ADDRESS	8. Owner Number 003633
DOUGLAS R. BYDE [WATER QUALITY MGR] MARYSVILLE UTILITIES 20 COLUMBIA AVE MARYSVILLE, WA 98270	MARYSVILLE UTILITIES CITY OF MARYSVILLE 20 COLUMBIA AVE MARYSVILLE, WA 98270	TITLE:
STREET ADDRESS IF DIFFERENT FROM ABOVE	STREET ADDRESS IF DIFFERENT FROM	
ATTN ADDRESS CITY STATE ZIP	ATTN ADDRESS CITY STATE ZIP	

9. 24 HOUR PRIMARY CONTACT INFORMATION	10. OWNER CONTACT INFORMATION
Primary Contact Daytime Phone: (360) 363-8125	Owner Daytime Phone: (360) 363-8100
Primary Contact Mobile/Cell Phone:	Owner Mobile/Cell Phone:
Primary Contact Evening Phone:	Owner Evening Phone: (xxx) xxx-xxxx
Fax:(360) 651-1798 | E-mail: XXXXXX	Owner Fax Phone: | E-mail: XXXXXX

WAC 246-290-420(9) requires that water systems provide 24-hour contact information for emergencies.

11. SATELLITE MANAGEMENT AGENCY - SMA (check only one)

- [x] Not applicable (Skip to #12)
- [ ] Owned and Managed SMA NAME: _____ SMA Number:
- [ ] Managed Only
- [ ] Owned Only

12. WATER SYSTEM CHARACTERISTICS (mark all that apply)

[ ] Agricultural	[x] Hospital/Clinic	[x] Residential
[x] Commercial / Business	[x] Industrial	[x] School
[x] Day Care	[x] Licensed Residential Facility	[ ] Temporary Farm Worker
[x] Food Service/Food Permit	[x] Lodging	[x] Other (church, fire station, etc.):
[x] 1,000 or more person event for 2 or more days per year	[x] Recreational / RV Park	_____

13. WATER SYSTEM OWNERSHIP (mark only one)				14. STORAGE CAPACITY (gallons)
[ ] Association	[ ] County	[ ] Investor	[ ] Special District	
[x] City / Town	[ ] Federal	[ ] Private	[ ] State	22,900,000

- SEE NEXT PAGE FOR A COMPLETE LIST OF SOURCES -

WATER FACILITIES INVENTORY (WFI) FORM - Continued

1. SYSTEM ID NO.	2. SYSTEM NAME	3. COUNTY	4. GROUP	5. TYPE
51900 C	MARYSVILLE UTILITIES	SNOHOMISH	A	Comm

15	16	17	18										19			20	21						22	23	24			
	SOURCE NAME	INTERTIE	SOURCE CATEGORY										USE				TREATMENT						DEPTH		SOURCE LOCATION			
Source Number	LIST UTILITY'S NAME FOR SOURCE AND WELL TAG ID NUMBER. Example: WELL #1 XYZ456 IF SOURCE IS PURCHASED OR INTERTIED, LIST SELLER'S NAME Example: SEATTLE	INTERTIE SYSTEM ID NUMBER	WELL	WELL FIELD	WELL IN A WELL FIELD	SPRING	SPRING FIELD	SPRING IN A SPRING FIELD	SEA WATER	SURFACE WATER	RANNEY / INF. GALLERY	OTHER	PERMANEANT	SEASONAL	EMERGENCY	SOURCE METERED	NONE	CHLORINATION	FILTRATION	FLUORIDATION	IRRADIATION (UV)	OTHER	DEPTH TO FIRST OPEN INTERVAL IN FEET	CAPACITY (GALLONS PER MINUTE)	1/4, 1/4 SECTION	SECTION NUMBER	TOWNSHIP	RANGE
S01	GWI Edward Springs					X							X			Y		X			X			760	SW SW	24	31N	04E
S03	Sunnyside Well #2		X												X	Y		X					328	800	NE NW	02	29N	05E
S04	GWI Stilli Well										X		X			Y		X				X		2200	NE NE	03	31N	05E
S05	Lake Goodwin		X										X			Y		X					150	350	SE SW	22	31N	04E
S06	AGB918 Edward Spr Well 2		X										X			Y		X					150	225	SW SW	24	31N	04E
S07	24050L/Everett	24050 L											X			Y	X							8328			00N	00E
S08	AGB920 Highway Well 9		X												X	Y		X					270	1000	SW SW	25	30N	05E
S09	AGB919 Edward Spr Well 3		X										X			Y		X					158	300	SW SW	24	31N	04E
S10	InAct 12/03/1981 AGB917 Edward Spr Well 1		X										X			Y		X					173	300	SW SW	24	31N	04E
S11	AKG831 Edward Spr Well 1R		X										X			Y		X					104	300	SW SW	24	31N	07E

WATER FACILITIES INVENTORY (WFI) FORM - Continued

1. SYSTEM ID	2. SYSTEM NAME	3. COUNTY	4. GROUP	5. TYPE
51900 C	MARYSVILLE UTILITIES	SNOHOMISH	A	Comm

	ACTIVE SERVICE CONNECTIONS	DOH USE ONLY! CALCULATED ACTIVE CONNECTIONS	DOH USE ONLY! APPROVED CONNECTIONS
25. SINGLE FAMILY RESIDENCES (How many of the following do you have?)	0	19395	Unspecified
A. Full Time Single Family Residences (Occupied 180 days or more per year)	18553		
B. Part Time Single Family Residences (Occupied less than 180 days per year)	0		
26. MULTI-FAMILY RESIDENTIAL BUILDINGS (How many of the following do you have?)			
A. Apartment Buildings, condos, duplexes, barracks, dorms	842		
B. Full Time Residential Units in the Apartments, Condos, Duplexes, Dorms that are occupied more than 180 days/year	842		
C. Part Time Residential Units in the Apartments, Condos, Duplexes, Dorms that are occupied less than 180 days/year	0		
27. NON-RESIDENTIAL CONNECTIONS (How many of the following do you have?)			
A. Recreational Services and/or Transient Accommodations (Campsites, RV sites, hotel/motel/overnight units)	0	0	
B. Institutional, Commercial/Business, School, Day Care, Industrial Services, etc.	1288	1288	
28. TOTAL SERVICE CONNECTIONS		20683	

29. FULL-TIME RESIDENTIAL POPULATION

A. How many residents are served by this system 180 or more days per year? 62115

30. PART-TIME RESIDENTIAL POPULATION	JAN	FEB	MAR	APR	MAY	JUN	JUL	AUG	SEP	OCT	NOV	DEC
A. How many part-time residents are present each month?												
B. How many days per month are they present?												

31. TEMPORARY & TRANSIENT USERS	JAN	FEB	MAR	APR	MAY	JUN	JUL	AUG	SEP	OCT	NOV	DEC
A. How many total visitors, attendees, travelers, campers, patients or customers have access to the water system each month?												
B. How many days per month is water accessible to the public?												

32. REGULAR NON-RESIDENTIAL USERS	JAN	FEB	MAR	APR	MAY	JUN	JUL	AUG	SEP	OCT	NOV	DEC
A. If you have schools, daycares, or businesses connected to your water system, how many students daycare children and/or employees are present each month?												
B. How many days per month are they present?												

33. ROUTINE COLIFORM SCHEDULE	JAN	FEB	MAR	APR	MAY	JUN	JUL	AUG	SEP	OCT	NOV	DEC
	70	70	70	70	70	70	70	70	70	70	70	70

35. Reason for Submitting WFI:

☐ Update - Change ☐ Update - No Change ☐ Inactivate ☐ Re-Activate ☐ Name Change ☐ New System ☐ Other _____

36. I certify that the information stated on this WFI form is correct to the best of my knowledge.

SIGNATURE: _____

DATE: _____

PRINT NAME: _____

TITLE: _____

WS ID	WS Name
51900	MARYSVILLE UTILITIES

Total WFI Printed: 1

APPENDIX B

Retail Water Service Area Agreements

3/1/78

16.00

NO SALES TAX REQUIRED

MAR 20 1978

KIRKE SIEVERS Snohomish County Treasurer

INTERLOCAL AGREEMENT FOR EASEMENT, WATER PURCHASE, AND MUNICIPAL UTILITY INTERTIE

THIS AGREEMENT is made and entered into by and between the CITY OF MARYSVILLE, a municipal corporation duly-organized and existing under the laws of the State of Washington, and the CITY OF ARLINGTON, a municipal corporation duly-organized and existing under the laws of the State of Washington;

W I T N E S S E T H :

WHEREAS, the CITY OF MARYSVILLE desires to construct a water transmission main connecting its well on the Stillaguamish River to its distribution system, and said main is designed to cross certain property at the Arlington Municipal Airport owned by and within the corporate limits of the CITY OF ARLINGTON; and

WHEREAS, the CITY OF MARYSVILLE desires that the CITY OF ARLINGTON grant it an easement for its water line to cross a certain portion of said airport, and the CITY OF ARLINGTON agrees to grant said easement without cost to the CITY OF MARYSVILLE upon the terms and conditions hereinafter set forth; and

WHEREAS, the CITY OF ARLINGTON desires to tap into said transmission line and purchase limited quantities of water from the CITY OF MARYSVILLE for the purpose of distributing the same through the Arlington public water system to a certain limited area as hereinafter described; and

WHEREAS, the parties hereto desire to enter into an agreement whereby their water systems will be intertied solely for emergency purposes; and

WHEREAS, the CITY OF MARYSVILLE is authorized to contract for the distribution of water to other municipalities pursuant to RCW 35A.80.010 and 35.92.200; and

WHEREAS, the CITY OF ARLINGTON is authorized to provide water utility service inside and outside of its corporate limits, and to contract with other municipalities for the acquisition of water for said purposes pursuant to RCW 35.21.210, 35.92.170 and 35.92.220; and

WHEREAS, the parties hereto desire to enter into this Interlocal Agreement pursuant to the provisions of RCW 39.34 for the purpose of providing for the construction and maintenance of Marysville's transmission line referred to above, and providing for the sale of water from said transmission line to the CITY OF ARLINGTON; Now, Therefore,

IN CONSIDERATION of the mutual covenants contained herein, and the benefits arising therefrom, it is hereby agreed as follows:

1. Easement. Arlington hereby grants, bargains, sells, transfers and conveys unto Marysville a permanent easement over, across, along and under the following described property situated in Snohomish County, Washington:

> The East 10 feet of the East 3/4 of the NW1/4 of Section 21, Township 31 North, Range 5 EWM, LESS County Road.

Said easement shall be for the purpose of installing, constructing, operating, maintaining, removing, repairing, replacing and using a water pipeline or lines with all connections, manholes and appurtenances thereto, together with the right of ingress to and egress from said described property for the foregoing purposes; provided that in the event private improvements are disturbed or damaged in either the original installation or in maintenance of such water pipeline or lines, Marysville shall immediately, after such installation or maintenance, restore said premises to their original condition as near as may be. This easement shall be a covenant running with the land and shall be binding on Arlington, its successors and assigns, forever, unless terminated pursuant to the terms of this agreement.

2. Permits and Franchises. Arlington agrees to grant Marysville all permits and franchises required for the construction of the transmission line on property within the jurisdictional boundaries of Arlington, and on public rights-of-way owned or controlled by Arlington. Such permits and franchises shall be at no cost to Marysville

3. Fire Hydrants. Marysville agrees to install fire hydrants along the transmission line at points designated on the map marked "Exhibit A", which is attached hereto and incorporated herein by this reference. The local fire district and the City of Arlington Fire Department shall have access to such hydrants for emergency purposes at no cost.

4. Sale of Water. Subject to the terms, conditions and limitations hereinafter set forth, Marysville agrees to sell and deliver water from the above-described transmission line to Arlington, and Arlington agrees to purchase and receive said water from Marysville:

> (a) Price. In determination of the price hereinafter mentioned, Marysville acknowledges that after considering all factors mentioned in RCW 35.92.010 (and particularly the capital contribution made to its water system through the grant of the easement herein), it has classified Arlington as being in a different class than that of an ordinary household, industrial or commercial user of water, and under such classification the price or rates to be charged as herein set forth is not other than

uniform for said class. Arlington agrees to pay Marysville the minimum sum of 20¢ per 100 cubic feet of water delivered under this agreement, with said payments to be made on a monthly basis within 30 days of receipt of a billing for the same from Marysville. The water rate fixed herein shall be subject to review and revision by increase or decrease on or before the 1st day of June of every 5th year hereafter, or at such other intermediate times as the parties may mutually agree upon. In such rate reviews, the following criteria and method shall be followed to establish the rates for the ensuing period of time:

(1) The "cash method" shall be used, which is based on a requirement of deriving sufficient revenue for Marysville to cover the costs specified in subparagraph (3) below.

(2) For the purpose of calculating the costs provided for herein, the parties will assume, regardless of fact, that sufficient water is available at the Stillaguamish Well to meet the delivery requirements provided for in this agreement, and that the transmission line between said well and the point of delivery is the only utility line used in connection with this agreement.

(3) Only the following two costs will be considered:

a. Operation, maintenance and repair expenses of the Stillaguamish Well, waterworks, transmission line and appurtenances between the source and the point of delivery at 172nd Street NE. Said costs, for which Marysville is solely responsible, shall be analyzed by an engineering consultant retained by Marysville, and an accounting shall be made for the same showing the allocation per 1,000 gallons of water delivered over the preceding rate period, and also projecting the allocation per 1,000 gallons delivered over the ensuing rate period.

b. Depreciation (replacement and improvement costs) for the Stillaguamish Well, waterworks, transmission line and appurtenances between the source and the point of delivery at 172nd Street NE. Such costs shall be based upon a 100-year life of the pipeline and of all structural components of the system; and a 25-year life of all mechanical and electrical components of the system, including pumps and controls. Such costs shall be analyzed by an engineering consultant retained by Marysville and an accounting shall be made for the same showing the allocation per 1,000 gallons of water delivered over the preceding rate period, and also projecting the allocation per 1,000 gallons delivered over the ensuing rate period.

RECORDED
1978 MAR 29 AM 11:33
HENRY B. WHITLEY, AUDITOR
SNOHOMISH COUNTY, WASH.
DEPUTY

(4) The rate to be charged to Arlington during the next rate period shall be the sum of the projected costs calculated pursuant to paragraphs (3) a and b above, provided that such costs shall be divided by the total number of gallons of water delivered through Marysville's transmission line from the Stillaguamish Well site to all of Marysville's and Arlington's customers. A master meter at the well site shall be installed to determine this total flow figure.

(b) Point of Delivery. Marysville shall deliver water to Arlington at a maximum of three points of delivery, all of which will be located by mutual agreement of the parties. Two of said points of delivery shall be located along the transmission line within the above-described easement, and one of said points of delivery shall be located along 43rd Avenue NE at a point chosen by Arlington. At each point of delivery there shall be a tee and gate valve with a 10-inch valve capacity. Such tees and valves shall be installed at Marysville's cost; any and all additional tees or valves shall be installed at Arlington's cost.

(c) Service Areas. Marysville and Arlington hereby mutually recognize and grant to the other the exclusive right to provide water utility services to any and all persons and property located within their respective service areas as identified on the map marked "Exhibit B" and incorporated herein by reference. Although Arlington does not have a formal service area, it is recognized that water delivered pursuant to this contract is intended solely for use on the Arlington Airport, west of Runway #15-33, and west of said runway if extended north and south to the north and south boundaries of said airport. The service area boundaries may be amended by mutual consent of the parties. Neither party will sell or distribute water to customers in the service area of the other party without having obtained a prior consent of that other party, and where necessary, the Snohomish County Boundary Review Board.

(d) Land Use Planning. In determining the availability of expanded water service within their respective service areas, the parties shall act consistently with the applicable comprehensive land use plans and the applicable comprehensive utility studies affecting said areas.

(e) Quantity of Water.

(1) Marysville shall use reasonable diligence and care to provide a regular and uninterrupted supply of water at the point of delivery for as long as the Stillaguamish Well is functioning as a collector site. Marysville shall not be liable for any failure, interruption or shortage of water, or for any loss or damage resulting therefrom, occasioned in whole or in part by any cause beyond the reasonable control of Marysville. In the event the Stillaguamish Well fails to produce the quantity of water required by reason of a change of natural conditions at the collector

site, Marysville reserves the right to abandon the waterworks and the portion of the transmission line north of 43rd Avenue NE, and terminate all service connections thereto, including those provided for in this agreement. All rights and obligations under this agreement shall thereafter terminate as provided below, except that Marysville shall continue to provide water from an alternate source to the north terminus of 43rd Avenue NE on the terms and conditions provided for herein, and such water service shall continue for as long as Marysville maintains its status as a public utility. With respect to the portion of Marysville's transmission line which is abandoned along the easement granted herein, Arlington reserves the right to require Marysville to remove said line or to deed the same to Arlington.

(2) After commencement of delivery pursuant to this contract, in periods of peak consumption or restricted supply causing water shortages, Arlington agrees to impose use restrictions on all of its customers being served water from the Marysville line to the same extent as Marysville imposes use restrictions on its customers during said periods pursuant to Ordinance No. 950, a copy of which is attached hereto as "Exhibit C" and incorporated herein by reference, and all amendments thereto.

(3) Marysville shall not be obligated at any time to deliver to Arlington a quantity of water in excess of the amount agreed upon by the parties pursuant to this contract. Said maximum quantity is contained in subparagraph (4) below and may be renegotiated and determined by the parties on or before the 1st day of June of every 5th year hereafter, or at such other intermediate times as the parties may mutually agree upon. At no time shall said maximum quantity be more than 100,000 gallons per day. Nothing herein shall be construed as obligating Arlington to take or purchase any water.

(4) The parties mutually agree for the first term of this contract that Marysville shall be obligated to deliver water to Arlington in an amount up to but not exceeding 100,000 gallons per day.

(5) The quantity of water delivered shall be measured by such master meters as Marysville may determine, and such meters shall be installed at any and all tee connections being used for delivery. The first such meter shall be purchased and installed at Marysville's cost. Such installation shall be at the tee designated by Arlington and within a reasonable time after such designation. The other two master meters shall also be purchased and installed by Marysville, but Arlington shall, within 30 days after demand, pay to Marysville the cost of such meters.

(f) Quality. Marysville agrees that all water delivered to Arlington at the point of delivery shall conform to and meet water and quality criteria of the State of Washington Department of Health, and will be of the same quality as to chemical and bacterial content as that delivered by Marysville to its other water customers. All water supplied by Marysville for use or sale by Arlington shall be upon the express condition that after it has passed the point of delivery, the same becomes the property of Arlington, and Marysville shall not be liable for any damages or loss beyond said point. If the quality of water deteriorates by reason of source pollution or a change of conditions at the collector site, Marysville reserves the right to abandon the waterworks and the portion of the transmission line north of 43rd Avenue NE, and terminate all service connections thereto, including those provided for in this agreement. All rights and obligations under this agreement shall thereafter terminate as provided below, except that Marysville shall continue to provide water from an alternate source to the north terminus of 43rd Avenue NE on the terms and conditions provided for herein, and such water service shall continue for as long as Marysville maintains its status as a public utility. With respect to the portion of Marysville's transmission line which is abandoned along the easement granted herein, Arlington reserves the right to require Marysville to remove said line or to deed the same to Arlington.

All waterworks construction and service connections shall conform to the requirements of the Washington State Department of Social and Health Services.

(g) Ownership, Maintenance and Service Fees. Marysville shall assume sole ownership, and responsibility for maintenance and improvement, of all parts of the water system preceding the point of delivery, including the master meters and recorders referred to in subparagraph (5) above. Arlington shall assume sole ownership, and responsibility for construction, maintenance and improvement, of all parts of the water system beyond the point of delivery. Maintenance of the second and third master meters installed at tee connections shall be performed by Marysville and billed to Arlington, and such bills shall be paid within 30 days of receiving the same. Further, Arlington shall assume the sole right and responsibility for the distribution of all water passing beyond the point of delivery, and hereby agrees to indemnify and hold Marysville harmless from any and all claims which may arise from such distribution. Arlington shall have the sole right and responsibility to charge and collect fees for connections to the water system beyond the point of delivery, and fees for the use and consumption of the water delivered.

(h) Municipal Utility Intertie. Notwithstanding the provisions in subparagraph (c) above restricting the use of water sold pursuant to this agreement to Arlington customers located on the Arlington Airport property, west of Runway #15-33, there shall be an intertie constructed between Marysville's transmission line and Arlington's municipal water system, which intertie will be available solely for emergency relief purposes. The intertie shall be designed by and at the expense of Marysville, and the cost of material, labor and installation shall be paid in equal shares by Arlington and

Marysville, and shall be constructed at a point where Marysville's transmission line runs parallel to Arlington's existing water system. The use of said intertie for emergency relief to a city suffering from water shortage shall be at the sole and exclusive discretion of the city supplying the emergency relief water. The mere fact that there is a drought, and either city is low on water, shall not be considered as cause for use of the intertie. The intertie may be used as temporary emergency relief in cases where a city's water supply is suddenly threatened by unanticipated damage, disaster, or source failure. In the event that both cities suffer from simultaneous emergencies, both shall implement water restrictions; if such restrictions do not relieve the emergency, the city supplying the water through the intertie may give preference to its customers and may shut off the intertie. Payment for water passing through the intertie shall be on a basis mutually agreed upon by the parties at that time.

(i) Delinquent Payments. In the event that Arlington fails to make payments in full for the water delivered each month, and for meter maintenance charges, within 30 days of being filled for the same, Marysville shall have the right, after 30 days' written notice personally served upon the City Clerk of Arlington, to discontinue service at all tee connections until there has been a mutually satisfactory arrangement for payment on the delinquent account. Delinquent accounts shall bear interest at the rate of 10% per annum until paid.

(j) Assignment and Amendment. Neither this contract nor any right or privilege herein shall be assigned by either party without the written consent of the other party. All amendments hereto shall be effective only when reduced to writing and signed by the parties. The terms and conditions hereof shall be binding upon and inure to the benefit of the successors and assigns of either party.

(k) Duration and Termination of Agreement. The term of this agreement shall be from the date of its execution and shall continue in effect until terminated for any of the following reasons and upon the following terms:

(1) By mutual consent of the parties.

(2) By a judgment or decree of the Superior Court of Snohomish County, Washington.

(3) One year after Arlington shall have in writing notified Marysville of termination, but such notice may not be given prior to January 1, 1979, and such termination shall not cause the easement hereinabove granted to terminate.

(4) Marysville may terminate this agreement upon written verification from an engineering consultant that the Stillaguamish water source, or collector system, is failing to produce a quantity or quality of water adequate to meet the requirements of this agreement. Upon such notification all rights and obligations of both parties hereunder shall cease, and easement rights granted herein shall terminate. Arlington reserves the right to require Marysville to remove the transmission line along said easement, or to require a deed granting the same to Arlington.

Provided, however, nothing herein shall terminate the obligation of Marysville to continue water service from alternate sources to a point located at the north terminus of 43rd Avenue NE. With respect to such water service only, the terms and provisions of this agreement shall remain in force and effect.

Provided further, Marysville shall be required to use reasonable diligence to preserve and maintain the sufficiency and suitability of water at the Stillaguamish waterworks so as to make termination pursuant to this paragraph unnecessary.

DATED this 1st day of March, 1978.

ATTEST:

By Phillip E. Dexter
City Clerk

THE CITY OF MARYSVILLE

By Gene Gunchus
MAYOR

APPROVED AS TO FORM:

By James H. Allen Jr.
City Attorney

ATTEST:

By Patsy Lebsetter
City Clerk

THE CITY OF ARLINGTON

By [illegible]
MAYOR

APPROVED AS TO FORM:

By [illegible]
City Attorney

8003290796

L2
Pam
Rick
Ken
Gerry

10/7/96

ANNEXATION AND SERVICE AREA SETTLEMENT AGREEMENT

THIS AGREEMENT is made this 7th day of October; 1996, between and among the **CITY OF ARLINGTON**, ("Arlington"), and the **CITY OF MARYSVILLE**, ("Marysville"), and **SNOHOMISH COUNTY FIRE PROTECTION DISTRICT 12** (*operating pursuant to interlocal agreement with the City of Marysville as the Marysville Fire District*), ("Fire District").

WHEREAS, the parties to this Annexation and Service Area Settlement Agreement, ("Agreement"), are presently engaged in litigation involving future annexation and service areas, and

WHEREAS, the parties believe it is in the best interests of each jurisdiction, and the public's best interest, to resolve their differences through compromise and negotiation; and

WHEREAS, the parties each recognize that resolving the complex issues associated with their competing interests through litigation is costly to the taxpayers and unlikely to bring about resolution of the issues for many months or years, contrary to the best interests of their citizens and those citizens in the areas affected by the disagreement; and

WHEREAS, the parties have engaged in ongoing discussions and mediation in an effort to resolve their differences; and

WHEREAS, the parties have resolved the disputes between them in a manner satisfactory to each jurisdiction in a way which provides a basis for planning and cooperation into the future; and

WHEREAS, the parties have pledged to the other to treat all residents and property owners in a fair and impartial manner, regardless of any past actions and regardless of where the residents and property owners are located;

NOW, THEREFORE, in consideration of mutual benefits and promises, the parties agree as follows:

A. GENERAL

1. Upon approval of this agreement by all parties hereto, a joint meeting shall be held with the County Executive, County Council Representative, and Director of Planning and Development Services to present, explain, and seek Snohomish County's support of the provisions of this agreement. All parties will use their best efforts to obtain the approval of

the County Executive and the County Council of the terms of this Agreement. Such approval will include elimination of joint urban growth boundaries and the establishment of the separate urban growth areas of Arlington and Marysville as set forth herein.

2. Neither Arlington nor Marysville will share revenue with the other from their respective annexations in areas that are within the amended Arlington Smokey Point annexation as described in Snohomish County Boundary Review Board file #22-95.

3. The parties shall have in place a timetable for announcing this settlement and for implementing this Agreement. The public announcement of this agreement shall be pursuant to a joint press release which shall be as provided in **Exhibit 1**. The timetable for implementation shall be as set forth in **Exhibit 2**, subject to revision by mutual agreement of the parties.

B. ANNEXATION BOUNDARIES

1. The parties agree on the separate urban growth boundary lines as set forth on the map attached hereto as **Exhibit 3** and incorporated herein by this reference. Such lines shall be proposed to Snohomish County as the Urban Growth Boundary for each City, and each City and the Fire District shall actively encourage adoption of such boundaries by the Snohomish County Planning Commission and the Snohomish County Council pursuant to ordinance and amendment of the Snohomish County Comprehensive Plan. In the event the County Council does not approve the boundaries agreed upon in **Exhibit 3**, the parties hereto agree to reopen this agreement and mediate alternative agreements in good faith. Neither City will annex outside of its agreed upon urban growth boundary as set forth in **Exhibit 3**. Provided, however, that with respect to the area which is crosshatched on **Exhibit 3**, Marysville agrees that if Arlington acquires any property in this area for municipal purposes, then Marysville will agree to the modification of the designated line so that Arlington may annex the property that it has acquired.

2. With respect to the property which is shaded on **Exhibit 3**, the parties recognize that in order for this area to be annexed to Marysville, changes in the urban growth line will need to be made in order for this area to be contiguous with Marysville. Arlington agrees to support modifications to the urban growth boundary line in this shaded area. However, if within ten (10) years of the date of this Agreement the urban growth boundary line has not been modified such that this shaded area can be contiguous with Marysville, then Marysville agrees to support this shaded area being added to Arlington's urban growth boundary. Provided, however, in the event the Snohomish County Council does not modify the urban growth boundary through the docketing request process or Phase II planning process during said 10-year period, both Cities may thereafter request the urban growth boundary be modified so as to include the shaded area within its urban growth boundary.

C. LAND USE

1. To the extent either City enters into any interlocal agreement with Snohomish County for the purpose of addressing issues relating to future annexations, such agreement shall be consistent with this agreement.

2. Arlington and Marysville agree to enter into an interlocal planning agreement with each other and Snohomish County relating to the urban growth boundaries of each City covered by and consistent with this agreement, utility service area boundaries consistent with this agreement, and such other regional issues as are necessary to meet the consistency requirements of the Growth Management Act.

3. Marysville acknowledges Arlington's strong interest in assuring that development east of 43rd and north of 152nd is compatible with continued operations of the Arlington airport and Arlington's Airport Master Plan. As such, Arlington and Marysville agree to enter into an interlocal agreement committing both jurisdictions to a process that will result in development standards for the area east of 43rd and north of 152nd. Height, type and density will be land use issues of concern to Arlington. The development standards will be consistent with Arlington Airport Master Plan and will include the following provisions to protect the Arlington Airport from future conflicts within its area of impact and to give both cities some certainty in predicting future land uses and utility planning in the area:

a. Strict compliance with current and future Federal Aviation Regulations (including, but not limited to, Part 77) within the area.

b. Requirements in land use applications, permit and planning processes requiring the granting or dedication, when reasonable, of avigation easements by owners of property located within the approach zone south of runway 34. Following annexation, Marysville will provide written notice to Arlington of land use applications, permit and planning processes in this area and Arlington will provide written comments and proposed conditions and language for such easements. To the extent allowed by law, such avigation easement will hold the Airport (City of Arlington) and the City of Marysville harmless from all current and future activities.

c. Encouragement of industrial and business park uses within this area, and discouragement of residential and other uses within this area which would conflict with the Arlington Airport.

d. Site plan review and input regarding consistency with agreed upon

development standards by Arlington of the area east of 43rd Avenue and north of 152nd Street to insure that conflicting land uses including, but not limited to, large bodies of water, tall structures, smoke, light and glare, electrical interference, and uses that are sensitive to high noise levels, do not occur within the area.

e. Arlington will provide Marysville and the District with advance written notice and an opportunity to provide input on any proposed changes to Arlington's Airport Master Plan.

D. SEWER AND WATER SERVICE

1. The parties agree on the "water and sewer utility service areas" as set forth on **Exhibit 4**, attached hereto and incorporated herein by this reference. For purposes of this agreement, "water and sewer utility service areas" shall mean those areas within each City's urban growth boundary and future annexation area within which that City shall have the authority to serve or plan for the services of sewer and water utilities. Such areas may be amended by future mutual agreements of the parties. Both cities shall work to cause the Water Utility Coordinating Committee (WUCC) to amend water service areas to be consistent with this agreement. Each city shall apply to have its water and sewer comprehensive plan amended consistent with this agreement.

2. The parties agree that they shall continue to study those areas east of the agreed upon urban growth boundary line in the area generally east of 67th Avenue N.E. and the area generally north of the Lakewood area, north of the existing urban growth boundary and west of I-5 with the idea of agreeing to annexation and planning boundaries for each city.

3. Arlington acknowledges Marysville's critical need to assure adequate long-range utility planning and the economic viability of its water and sewer systems as well as the ability to meet or exceed present and future environmental standards. The Cities of Arlington and Marysville are committed to entering into an interlocal agreement that will assure these goals are met and provide for present and future utility service in the area designated for utility service by the City of Marysville and for annexation to the City of Arlington. If necessary, an interim agreement will be implemented to provide a smooth transition while the permanent agreement is drafted. Under the terms of these agreements, Marysville will continue to provide water and sewer service to the Smokey Point area, including that portion south of approximately 180th Street NE, upon the following conditions:

a. Property owners within the Arlington annexation area will receive the same level and quality of service as other comparable property owners located in Marysville or in the Marysville urban growth boundary.

b. There shall be equitable monthly rates, connection fees and development fees within that part of Arlington's urban growth boundary served by Marysville as within adjacent unincorporated areas. Marysville agrees to hold a public hearing prior to any increase in utility rates or fees and shall consider testimony of all speakers prior to adjusting rates or fees. Marysville will provide Arlington with sixty (60) days' advance notice of any such public hearing.

c. Marysville will provide timely utility service to property owners within that part of Arlington's urban growth boundary served by Marysville as set forth in **Exhibit 4** upon developer application provided development is in conformance with either the County's or Arlington's Comprehensive Plan, as applicable. Service shall be provided in as timely a manner within Arlington's urban growth boundary area as outside of Arlington's urban growth boundary. Service shall be contingent on compliance with Marysville's codified discharge limitations and its NPDES permit.

d. Any service moratoriums by Marysville that are not necessitated by conditions that are specifically related to the service area defined in **Exhibit 4** shall be applied system-wide, rather than just within the area served by Marysville within Arlington's urban growth boundary. The two Cities will work together to alleviate any moratorium within the Arlington annexation area properties through provision of short- or long-term sewage collection and disposal or water service. In such situations, the Cities shall coordinate their efforts to alleviate service problems to the greatest extent practicable.

e. Agreement by Arlington on issues relating to controlling the volume of sewage and the quality of the material discharged into the sewer system. These issues shall be addressed in connection with the interlocal agreement described in Section C-2, above or in a separate interlocal agreement between the parties.

4. The parties agree it is in their mutual interests to continue ongoing discussions regarding the provision of water and sewer service north of approximately 180th St. NE. Said discussions shall be based on the premises set forth in paragraph 5, below.

5. Arlington may have the option of purchasing Marysville's water and sewer service facilities north of approximately 180th Street NE upon the following conditions:

a. The option to purchase shall be exercised within twelve (12) months of the date of this agreement. During that period of time, the parties shall agree upon the terms of such sale, which shall be governed by subparagraphs 5(b) through 5(e), below.

b. Transfer of the system to Arlington shall be at the earliest possible date after the exercise of the option to purchase.

c. Diversion of effluent collected within Marysville's sewer system north of approximately 180th Street NE at the time of the transfer of the system to Arlington, or such other date as may be agreed upon.

d. Allowance for Arlington within the area to be transferred to purchase water from Marysville at nondiscriminatory cost-based wholesale rates and have it provided to them, using a master meter installed at Arlington's expense to measure the water consumed.

e. The parties agree to negotiate in good faith to establish the purchase price of the system. If no such agreement is reached, then the price shall be set by an independent arbitrator with payout terms extended, at Arlington's discretion, over a maximum of 15 years, so long as such payment terms do not conflict with Marysville's bond covenants. Any agreement and any payment terms, whether reached by negotiation or through arbitration, shall be consistent with the provisions of Marysville ordinance #1995. Provision shall be made in such agreement for securing payment for sale of the utility system.

f. In the event Arlington elects not to exercise the option to purchase the utility system, Marysville will continue to serve existing customers with the understanding that it shall not be obligated to make any expansion of infrastructure to serve new customers. Provided, however, in the event expansion of the infrastructure occurs, the parties will work cooperatively in the planning and financing of such expansion.

6. Both Cities recognize the need for long-range utility service planning. The Cities, within twelve (12) months of the full execution of this agreement, shall reach agreements regarding the boundaries for long-range utility service for the area within Arlington's urban growth boundary generally north of the agreed upon urban growth boundary line and east of 43rd, which area is crosshatched on **Exhibit 4**. Until such agreements are reached, Marysville will continue to provide, as necessary, water and sewer service in said area on similar terms to service provided to other areas within Arlington's urban growth boundary served by Marysville.

7. Marysville and Arlington will commit to work together to strengthen the integrity, quality, pressure and capacity of the systems providing water to areas of mutual interest through appropriate and agreed-upon mechanisms including, but not limited to, interconnects between the Arlington and Marysville systems. The parties also agree to promptly

discuss, but shall not be required to agree upon, treatment of some Ranney well water in the Arlington system, and construction dependent on the joint funding of a two-phase water plant project to benefit the systems.

8. The Cities shall appoint a committee consisting of the City Administrators and Public Works Directors and/or City Engineers, together with such other staff each city shall mutually agree to. Such committee shall meet on a periodic basis and consult on issues relating to operational, technical and utility planning issues of mutual concern.

E. FIRE SERVICE

1. Arlington will enter into a contract with Marysville and Fire District 12 for continued fire and emergency medical services for all areas within the Fire District's existing service area which is within Arlington's urban growth boundary as described in **Exhibit 3**. The contract shall be for seven (7) years commencing from the date Arlington first annexes land in its Smokey Point annexation area, with a three (3) year notice of termination to be exercised at the end of the 7-year period. Other terms shall be as mutually agreed.

2. Upon annexation by Marysville of territory within Fire District 21 Marysville, through the Marysville Fire District, will commit to at least a seven (7) year contract with Fire District 21, if requested by Fire District 21, for continued fire service in Marysville's urban growth area currently served by Fire District 21. Said agreement will have similar provisions relating to assets and revenue as provided District 12 by Arlington in the contract referenced in E-1 above. In the event Fire District 21 or Arlington continues to serve territory of Fire District 21 that is annexed by Marysville, the same level of service as provided to adjacent areas by Marysville Fire District shall be provided. In the event such level of service cannot be provided, Marysville Fire District shall serve said area on terms as agreed by contract. Other terms of such contract shall be as mutually agreed.

F. MISCELLANEOUS

1. Marysville and Arlington will cooperate in regional management of drainage, including, but not limited to, drainage relating to the areas within each City's urban growth boundary. These issues could be addressed in connection with the interlocal agreement described in Section C-2 above.

2. Marysville and Arlington will work together to extend 43rd Avenue from 172nd Street to 152nd Street, and, subject to each City's budgetary constraints and further agreements of the parties, pay their proportionate share of costs, when both jurisdictions determine that development and traffic justifies the street extension. Participation in the street extension shall not be unreasonably withheld by either party. Both parties will seek to include Snohomish

County in any cost-sharing agreement.

G. DISPUTE RESOLUTION

1. Arlington, Marysville and the Fire District agree to the following procedure for resolving disputes in connection with issues arising under this agreement. Except as specifically provided for elsewhere in this settlement agreement, and except where a mandatory specific dispute resolution process is already established by law, this procedure will begin with good faith negotiations between the jurisdictions, followed by mediation should the jurisdictions reach an impasse, followed by binding arbitration should the jurisdictions reach an impasse in mediated negotiations.

H. APPEALS

1. Marysville and Fire District 12 will dismiss their lawsuits challenging the Smokey Point annexation.

2. Marysville and Fire District 12 will, upon request by Arlington, support and participate in Arlington's efforts to pursue annexation of the Smokey Point annexation area consistent with this agreement, including, but not limited to, participation in and support of a request to the court to remand the Boundary Review Board decision on the Smokey Point annexation to the Boundary Review Board for further fact finding consistent with this settlement agreement. However, regardless of the decision of the Boundary Review Board, Arlington agrees to abide by the annexation boundaries set forth in **Exhibit 3** and will not adopt any annexation ordinance or conclude any annexation of an area inconsistent therewith.

3. Marysville and Fire District 12 will not oppose Arlington's appeal of the Boundary Review Board's Island Crossing decision.

4. Marysville will amend Chapter 14.32 of its municipal code to not require annexation covenants as a condition to water and sewer service within that portion of the Arlington urban growth boundary served by Marysville. Marysville will release the obligation requiring citizens to annex to Marysville in existing annexation covenants with property owners within said area. In the interim, upon adoption of the proper ordinance, which shall be within thirty (30) days of the execution of this settlement agreement, Marysville will commence to provide water and sewer service to property owners in the Arlington annexation area who request or have requested such service on terms and conditions that are consistent with the Marysville Utility Code (excepting the annexation covenant requirements) and on terms and conditions that reflect the understandings reached by the parties in this settlement agreement.

5. Marysville will dismiss its appeal of Arlington's amendments to its sewer and water comprehensive plans so long as such plans are consistent with the terms of this agreement. Arlington will prepare and submit written amendments to said plans consistent with this agreement to all agencies with jurisdiction and to Marysville.

6. Arlington will dismiss its appeal of Marysville's comprehensive plan. Marysville will amend said comprehensive plan, consistent with the terms of this agreement, and will submit such amendments to Arlington for review and comment prior to adoption.

7. Arlington will amend its Comprehensive Plan to be consistent with the terms of this agreement and will submit it to Marysville prior to adoption.

8. Arlington will support and not challenge any revisions by Marysville to its RUSA boundary necessitated by this settlement agreement.

9. Marysville and Fire District 12 will not challenge future annexations by Arlington of the Arlington urban growth boundary areas identified in **Exhibit 3**.

10. Arlington will not challenge future annexations by Marysville of the Marysville urban growth boundary areas identified in **Exhibit 3**.

11. Nothing contained in this agreement shall be intended to create or otherwise establish any particular class or group of persons or property owners who will or should be especially protected or benefitted by the terms of this agreement. No provision or term of this agreement is intended to limit either City's authority to impose lawful regulations for the provision of services. This agreement shall not be construed as an admission of any duty to provide municipal services absent compliance with all lawful rules, regulations or ordinances.

DATED this 7th day of October, 1996.

CITY OF ARLINGTON

Robert Kraski

Robert Kraski, Mayor

Larry Caldwell

Larry Caldwell

Montey Hagenston

Richard Larsen

Sally Lien

Bea Randall

Don Regan

Oliver Smith

ATTEST/AUTHENTICATED

By Kathy Peterson
City Clerk

CITY OF MARYSVILLE

David Weiser, Mayor

Shirley Bartholomew

Ken Baxter

Otto Herman

Mike Leighan

John Myers

Donna Pedersen

Donna Wright

ATTEST/AUTHENTICATED

By _____
City Clerk

8/4/98

1998

AGREEMENT BETWEEN

CITY OF MARYSVILLE AND THE CITY OF ARLINGTON

FOR THE ASSUMPTION OF A PORTION OF THE MARYSVILLE UTILITY SYSTEM AND TO PROVIDE WHOLESALE WATER

IT IS HEREBY AGREED by and between the CITY OF MARYSVILLE, a municipal corporation of Snohomish County, Washington, hereinafter referred to as the "MARYSVILLE," and the CITY OF ARLINGTON, a municipal corporation of Snohomish County, Washington, hereinafter referred to as "ARLINGTON."

WHEREAS, MARYSVILLE and ARLINGTON have entered into an Annexation and Service Area Settlement Agreement which establishes a service area boundary east of Interstate 5 and envisions that the CITY OF ARLINGTON will eventually serve all current MARYSVILLE customers north of 180th Street N.E. east of Interstate 5.

WHEREAS, MARYSVILLE hereby agrees to provide the following services to ARLINGTON: Conveyance of water through a master meter at approximately 180th Street N.E. and Smokey Point Boulevard.

WHEREAS, it is proposed that a "Wholesale Water Charge" be established which will fairly and reasonably compensate MARYSVILLE for furnishing and conveying water through Marysville's water distribution system to the point of connection with ARLINGTON as established by this agreement.

WHEREAS the Annexation and Service Area Settlement Agreement contemplates the CITY OF ARLINGTON providing water and sewer service to areas currently being served by the CITY OF MARYSVILLE and whereas the CITY OF ARLINGTON will assume ownership and operations of MARYSVILLE's water and sewer service facilities north of 180th Street N.E. and east of Interstate 5 as shown on attached Exhibits A and B.

NOW, THEREFORE, IT IS AGREED as follows:

I

DEFINITIONS

As used in this Agreement, the following words and phrases shall have the meanings hereinafter set forth unless the context shall clearly indicate that another meaning is intended.

(1) The term "Cubic Foot" shall mean a unit of measurement of flowing water equal to 7.48 gallons past a given point, usually a meter.

(2) The term "Distribution Facilities" shall mean that system of pipes and appurtenances used for receiving a supply of water and distributing it directly to the consumers or final users. For the purpose of this contract, it shall be further understood to mean that the "distribution facilities" are separate parts of a water system and as such are all operated and controlled by either MARYSVILLE or ARLINGTON individually, but not jointly.

(3) The term "Distribution Main" shall mean any size water main which has service connections tapped directly to the water main supplying an individual or final consumer.

(4) The term "Fire Flow" shall mean the rate of water flow needed to fight fires under WAC 246-293-640 or adopted CITY OF MARYSVILLE Standards.

(5) The term "Master Meter" shall mean the measuring device placed in the flow of a large main not being a service connection.

(6) The term "Maximum Instantaneous Demand" shall mean the maximum rate of water use excluding fire flow which has occurred or is expected to occur within a defined service area at an instant in time.

(7) The term "Peak Day Water" is the 24-hour average flow rate for any maximum usage day during a calendar year.

(8) The term "Service Connections" shall mean those separate connections between a distribution system main and the final consumer.

(9) The term "Service Meters" shall mean the meter or measuring device installed on a service line or service connection for the purpose of measuring the water service furnished to the final consumer.

(10) The term "Sewer Collection System" shall mean that system of pipes, pump stations, and appurtenances used to collect sanitary waste water and transmit it to a wastewater treatment facility.

(11) The term "Transmission Main" shall mean that part of the supply system having a primary purpose of carrying a supply of water between the source and the distribution systems and has no direct service connections except by variance by the MARYSVILLE City Council to individuals or final users tapped into this main.

II

TRANSFER OF FACILITIES

MARYSVILLE shall transfer to ARLINGTON all physical water facilities and administration upon completion of the master meter installation and transfer all physical sanitary sewer facilities and administration upon completion by ARLINGTON of diversion of effluent facilities into the Arlington system. Both utilities shall be transferred simultaneously upon payment in full of the purchase price as agreed pursuant to the terms of the separate sales contract between the parties.

At such time as the sewer diversion is complete, MARYSVILLE, at its expense, will cut and plug the two ends of the existing force main at 180th Street NE and extend and connect the existing force main to the Arlington gravity system at Arlington's expense.

III

DEDICATED UTILITY LINES

Should either MARYSVILLE or ARLINGTON be required to install water or sewer mains within the other's corporate limits to supply water or sewer service to their service area, each agree to apply for, and each agrees to grant, subject to all CITY rules, policies, regulations and ordinances, necessary permits, franchises and rights-of-way to the other as reasonably required provided further that each shall pay for all acquisition of rights-of-way required to be obtained on other than public streets and public properties of the other. All necessary permits and/or franchise fees required shall be paid by the party installing the mains. Fees shall be based on the reasonable cost of reviewing, granting, and administering the necessary franchise. When constructing along the rights-of-way covered by the leases, permits, and franchises, each city will abide by the permitting CITY's codes and ordinances. Each agrees to maintain all the facilities constructed by it within the corporate limits of the other in good working order and will save harmless the other party from any and all claims for damages to property or persons resulting from its failure to comply with this agreement or from acts of omissions by its agents.

IV

POINTS OF CONNECTION

MARYSVILLE agrees to deliver maximum instantaneous flows (based on average daily demand of 70,000 gallons) and a peak day demand of 175,000 gallons per day, and fire flows of 1,400 gpm at a residual pressure of 20 psi at the agreed connection point on the transmission main within MARYSVILLE's existing distribution facilities at rates as hereinafter set forth. Said agreed connection point is a single point of connection at 180th Street N.E. and Smokey Point Boulevard.

The actual point of delivery shall be the upstream flange of the valve downstream of the "Master Meter" and check valve. If MARYSVILLE supply is limited by the City of Everett, the ARLINGTON' supply will be limited in the same proportion as the entire CITY OF MARYSVILLE will be limited.

The agreement to supply water by MARYSVILLE to ARLINGTON shall be subject to and limited by unavoidable accidents, acts of God, and any conditions beyond the control of MARYSVILLE. If MARYSVILLE declares an emergency on limited water available through accident, catastrophe, or emergency limitations of supply and notifies ARLINGTON of the limitations imposed by MARYSVILLE, ARLINGTON shall comply with those limitations or be subject to MARYSVILLE's controlling delivery of water at the "Master Meters" during that emergency. MARYSVILLE will treat any major interruption to the supply to ARLINGTON as an urgent matter and will attempt to restore or cause to be restored normal service to ARLINGTON as expeditiously as possible. Marysville shall administer any system-wide or area-wide emergency of its systems by treating Arlington the same as Marysville customers. As such, ARLINGTON agrees to save and hold harmless MARYSVILLE, its officers, agents, and employees, from and against any and all liabilities, claims, actions, or damages by ARLINGTON and customers thereof relating to or arising out of unavoidable accidents, acts of God, catastrophe, emergency limitations of supply, and any and all other conditions beyond the control of MARYSVILLE. Any and all claims arising out of such circumstances by customers of ARLINGTON shall be referred directly to ARLINGTON and it shall review, adjust, and/or defend said claims at its own expenses, as appropriate.

The quantity of water delivered shall be measured by the "Master Meters" referred to in Section VI herein. Nothing herein, however, should be construed as obligating ARLINGTON to take or purchase any minimum quantity of water from MARYSVILLE at any time.

V

MASTER METER

All water supply delivered by MARYSVILLE to ARLINGTON through the permanent supply point at 180th Street N.E. and Smokey Point Boulevard shall be measured through the "Master Meter." If this agreement remains in effect 5 years from the date hereof, said "Master Meter" shall be upgraded to include telemetry of flow data and any necessary control functions and shall meet all specifications and approval of MARYSVILLE. All costs of installation of said meter and telemetry upgrades, if any, shall be borne by ARLINGTON. The "Master Meter" and facilities to the downstream face of the meter vault shall be owned and maintained by the City of Marysville.

MARYSVILLE shall construct, purchase, and install a new "Master Meter" facility meeting all MARYSVILLE specifications at the agreed upon connection point. –Within thirty (30) days of the construction, purchase, and installation of such meter facility, MARYSVILLE shall bill ARLINGTON and ARLINGTON shall reimburse MARYSVILLE for all expenses associated with the construction, installation, and the purchase of equipment for the metering

facility. Said meters shall be installed in an adequately drained vault separate from any pressure-reducing equipment which is necessary. MARYSVILLE shall operate, maintain, repair, and test the master meters. MARYSVILLE shall provide documentation of all maintenance, repairs, and testing to ARLINGTON.

Access to the meter and the flow records shall be made available to MARYSVILLE and ARLINGTON at all times. MARYSVILLE shall maintain, repair, and replace the remote control recording equipment at the meter. The meter shall be checked by MARYSVILLE for accuracy on an annual basis as part of normal maintenance. However, either party to this agreement may, at its option, request or cause to be tested the main line meter for accuracy at any other time between the annual checks. An unscheduled test shall not commence without notification to the other party. All tests shall be conducted in a manner agreeable to both parties and the costs of the testing other than the annual check shall be borne in the following manner: If both parties agree to the test, then costs will be shared equally. If either of the parties singularly requests the test, then the cost shall be borne by the party causing the test to be performed providing the test indicates the meter to be performing within 2% of the degree of accuracy guaranteed by the manufacturer of the equipment. In the event the meter is not performing within the allowable limits (2% of the manufacturer's guaranteed accuracy) then the party benefiting as a result of the malfunction shall bear the cost of the test that the meter is not functioning within the herein agreed tolerance, then an adjustment in charges for water supply shall be determined as follows:

The meter error percentage determined from the test shall be used to adjust recorded deliveries and shall apply for a period of time being one-half the time between the last satisfactory test and the test at which the malfunction was determined, plus all of the time between discovery of the error and completion of repairs or adjustment of the meter. Either a credit or additional billing at the rates hereinafter provided for water supply shall accrue to the appropriate party. The "Master Meter" installation shall include a blank meter case with cover plate for testing meter immediately downstream of the "Master Meter" with appropriate valving and bypass around said meter and meter case to facilitate testing of meter. MARYSVILLE will provide and insert test meter for accuracy certification of "Master Meter." A strainer immediately upstream of "Master Meter." will be included as part of the "Master Meter" installation.

Should the test meter record a different consumption than the master meter, consumption will be adjusted to the test meter as aforementioned. Consumption will continue to be based upon an adjustment to the test meter until the master meter is recalibrated.

VI

WATER QUALITY

MARYSVILLE agrees that all water delivered to ARLINGTON at the point of delivery shall be of the same standard and quality as that normally delivered by MARYSVILLE to its other customers served by the same source or sources. MARYSVILLE shall be responsible for meeting state and federal standards for safe, high quality drinking water at the point of delivery. All water supplied by MARYSVILLE for use or sale by ARLINGTON shall be upon the express condition that after it has passed the point of delivery the same becomes the property of ARLINGTON and MARYSVILLE shall not be liable for any damages or loss resulting from degradation of water quality which may occur beyond said point. Further, MARYSVILLE shall not be responsible for changes in water quality or operating problems which may result from mixing of different sources of water in ARLINGTON's systems. ARLINGTON shall provide means to assure that water will not backflow into the MARYSVILLE system.

VII

WATER RATE

MARYSVILLE will be compensated for water transmitted through MARYSVILLE's water distribution system to the subject area. From and after December 31, 2001, the cost to ARLINGTON shall be adjusted by MARYSVILLE City-Ordinance based upon the projected costs and water quantities projected into the future per MMC 14.07.060 as it now reads or is hereinafter amended.

Initial Water Rates:

The initial water rate to ARLINGTON shall be $1.75 per 1,000 gallons and a metering rate of $150 per month for customer fixed costs associated with meter maintenance, operation, replacement, reading, billing expense, reports, and collection. Such rates will be effective the following month after date of execution of this agreement and actual connection to MARYSVILLE's distribution system. The rate shall be effective through December 31, 2001.

ARLINGTON further agrees that the water rate established in the previous paragraphs shall also apply to all other existing interlocal agreements for wholesale water purchases. The parties further agree to separately negotiate other changes to such other interlocal agreements. The parties further agree that the Dispute Resolution procedures of the agreement shall apply to the negotiation of any changes to such other interlocal agreements. Any future utility agreement between the parties shall be negotiated on a case-by-case basis.

VIII

BILLING AND PAYMENT

The period of billing for water supplied under this agreement shall be on regular monthly intervals.

The "Master Meter" shall be read by Marysville and recorded near the last normal workday of the month in which the service was furnished. Billing to ARLINGTON will be sent by the 10th day of the month following, and payment to MARYSVILLE becomes due by the 30th day of the month in which the statement is received. If any payment or portion thereof due to MARYSVILLE shall remain unpaid for 15 days following its due date, ARLINGTON shall be charged with and pay to MARYSVILLE interest on the amount unpaid from its due date until paid at the rate of 12% per annum. In the event MARYSVILLE is required to collect any delinquent fees, rates, costs, or billings which become past due, both parties stipulate and consent to both venue and jurisdiction of the Snohomish County Superior Court. The substantially prevailing party in such action shall be entitled to its costs and reasonable attorney fees from the other party.

Arlington agrees that water utilized by Marysville customers located north of the master meter connection shall be subtracted from the amount of water to be billed to Arlington.

IX

TERM AND EXPIRATION

(1) The term of this contract shall be from the date of its mutual acceptance by all parties until July 1, 2020, plus such extensions as may be mutually agreed upon.

X

DISPUTE RESOLUTION

Except as provided in other sections of this agreement, the parties desire to avoid and settle without litigation future disputes which may arise between them relative to this agreement. Accordingly, the parties agree to enter into and engage in good faith negotiations to resolve any such dispute.

In the event the parties are unable to resolve any disagreement which may arise by good faith negotiations, the parties agree to engage the services of an agreed upon mediator knowledgeable in municipal utilities issues and /or law. The parties agree to share in the cost of the mediator equally. In the event the parties are unable to agree upon a mediator, the parties agree that a mediator shall be appointed by the Snohomish County Executive.

In the event the parties are unable to reach agreement through either good faith negotiation or mediation, the parties agree that any remaining disputes shall be resolved through the Snohomish County Superior Court. In any proceeding, the parties may, but need not, stipulate to arbitration under the Snohomish County arbitration rules

XI

WAIVER, ASSIGNMENT, NOTICES, AND ENTIRETY

(1) Waiver: No waiver by either party hereto of any terms or conditions of this agreement shall be deemed or construed to be a waiver of any other term or condition, nor shall the waiver of any breach be deemed to construed to constitute a waiver of any subsequent breach, whether of the same or any other term or condition of this agreement.

(2) Assignment: Neither this agreement nor any of the rights, interest, or obligations created hereunder may be assigned by either party without the written consent of the other party

(3) Notices: Notices required or permitted to be given hereunder shall become effective upon being deposited as registered or certified mail in a United States Post Office, addressed as follows:

(4) This agreement shall be read in conjunction with that certain "Sale Contract By or Between The City of Marysville, Washington, and the City of Arlington, Washington" dated 4th August, 1998 and that certain "Sewer Utility Maintenance Contract" dated 4th August, 1998

To The City of Arlington:

Honorable Mayor
City of Arlington
238 N. Olympic
Arlington, WA 98223

To The City of Marysville:

Honorable Mayor
City of Marysville
Marysville City Hall
4822 Grove Street
Marysville, WA 98270

or to such other address as may be substituted in writing by the addressee.

DATED this 24th day of August, 1998

CITY OF ARLINGTON

By: Robert Kaski
Mayor

(Seal)

Attest: Kathy Peterson
City Clerk

CITY OF MARYSVILLE

By: David Weisser
Mayor

(Seal)

Attest: Mary Swanson
City Clerk

Approved as to Form

Attorney, City of Arlington

Attorney, City of Marysville

CITY OF MARYSVILLE

Sale of Island Crossing Utilities
Personal Property Description of Sewer Facilities

EXHIBIT A-1
SEWER

ITEM NO.	ON	FROM	TO	SIZE	LENGTH (FT.)	PIPE TYPE	EASEMENT
1	OLD HIGHWAY 99	180TH STREET NE	PUMP STATION #2 (PORTAGE CREEK P.S.)	8"	6270	DUCTILE IRON (FORCE MAIN)	NONE
2	(GEORGE LO'S EXTENSION)	SR 530	200' S of SR 530	10"	440	P.V.C.	25' UTILITIES EASEMENT
3	27TH AVENUE NE	PUMP STATION #2 (PORTAGE CREEK P.S.)	PUMP STATION #1 (ISLAND CROSSING P.S.)	8"	5278	DUCTILE IRON (FORCE MAIN)	NONE
4	212TH STREET NE	PUMP STATION #1 (ISLAND CROSSING P.S.)	I-5	8"	1410	DUCTILE IRON	NONE
	212TH STREET NE	PUMP STATION #1 (ISLAND CROSSING P.S.)	I-5	6"	167	DUCTILE IRON	NONE
5	(STILLAGUAMISH POINTE APARTMENTS)	35TH AVENUE NE	31ST AVENUE NE	4"	255	DUCTILE IRON	NONE
6	PUMP STATION #1 (ISLAND CROSSING PUMP STATION)						
7	PUMP STATION #2 (PORTAGE CREEK PUMP STATION)						
8	INDIVIDUAL SIDE SEWERS FROM MAIN TO PROPERTY LINE						

CITY OF MARYSVILLE

Sale of Island Crossing Utilities
Personal Property Description of Water Facilities

EXHIBIT A-2
WATER

ITEM NO.	ON	FROM	TO	SIZE	LENGTH (FEET)	PIPE TYPE	EASEMENT
1	31ST AVENUE NE (ROGER HOCKMAN EXTENSION)	180TH STREET NE	64' N of 180TH STREET NE	6"	124.5	CAST IRON	NONE
2	31ST AVENUE NE (TIMBER PARK EXTENSION)	~180TH STREET NE	188TH STREET NE	8"	2692	DUCTILE IRON	NONE
	31ST AVENUE NE (TIMBER PARK EXTENSION)	~180TH STREET NE	188TH STREET NE	4"	483	DUCTILE IRON	NONE
3	(STILLAGUAMISH CENTER)	35TH AVENUE NE	31ST AVENUE NE	10"	957	DUCTILE IRON	10' EASEMENT
4	(STILLAGUAMISH POINTE APARTMENTS)	35TH AVENUE NE	31ST AVENUE NE	8"	389	DUCTILE IRON	10' EASEMENT
5	(STILLAGUAMISH SENIOR CENTER)	35TH AVENUE NE	(HIGHWAY HOME ESTATES)	10"	385	DUCTILE IRON	10' EASEMENT
6	(STILLAGUAMISH POINTE)	35TH AVENUE NE	SHORT PLAT #68 - 68	8"	992	DUCTILE IRON	15' EASEMENT
7	(TOM LESTER EXTENSION)	35TH AVENUE NE	640' E of 35TH AVENUE NE	8"	472	DUCTILE IRON	NONE
	(TOM LESTER EXTENSION)	35TH AVENUE NE	640' E of 35TH AVENUE NE	6"	334	DUCTILE IRON	30' ROAD EASEMENT
	(TOM LESTER EXTENSION)	35TH AVENUE NE	640' E of 35TH AVENUE NE	4"	156	DUCTILE IRON	NONE
8	182ND STREET NE (JUSTIN ESTATES)	35TH AVENUE NE	36TH AVENUE NE	6"	719	DUCTILE IRON	NONE
9	183RD PLACE NE (STILL SCENE ESTATES)	OLD HIGHWAY 99	36TH DRIVE NE	8"	609	DUCTILE IRON	NONE
10	193RD STREET NE (GRABER EXTENSION)	OLD HIGHWAY 99	300' W of OLD HIGHWAY 99	8"	354	DUCTILE IRON	20' ACCESS / UTILITY EASEMENT
11	(GEORGE LO'S EXTENSION)	SR 530	465' S of SR 530	8"	465	DUCTILE IRON	25' UTILITIES EASMENT
12	HIGHWAY 99	180TH STREET NE	212TH STREET NE	10"	11960	CAST IRON	NONE
	HIGHWAY 99	180TH STREET NE	212TH STREET NE	8"	260	DUCTILE IRON	15' PERMANENT EASEMENT
	HIGHWAY 99	180TH STREET NE	212TH STREET NE	8"	219	CAST IRON	NONE
	HIGHWAY 99	180TH STREET NE	212TH STREET NE	1"	189	GALVANIZED IRON	15' PERMANENT EASEMENT
13	212TH STREET NE	27TH AVENUE NE	I-5	8"	382	DUCTILE IRON	NONE
14	180TH STREET NE	~ 35TH AVE NE	35TH AVE NE	8"	434	CAST IRON	NONE
15	INDIVIDUAL WATER SERVICES INCLUDING METERS						

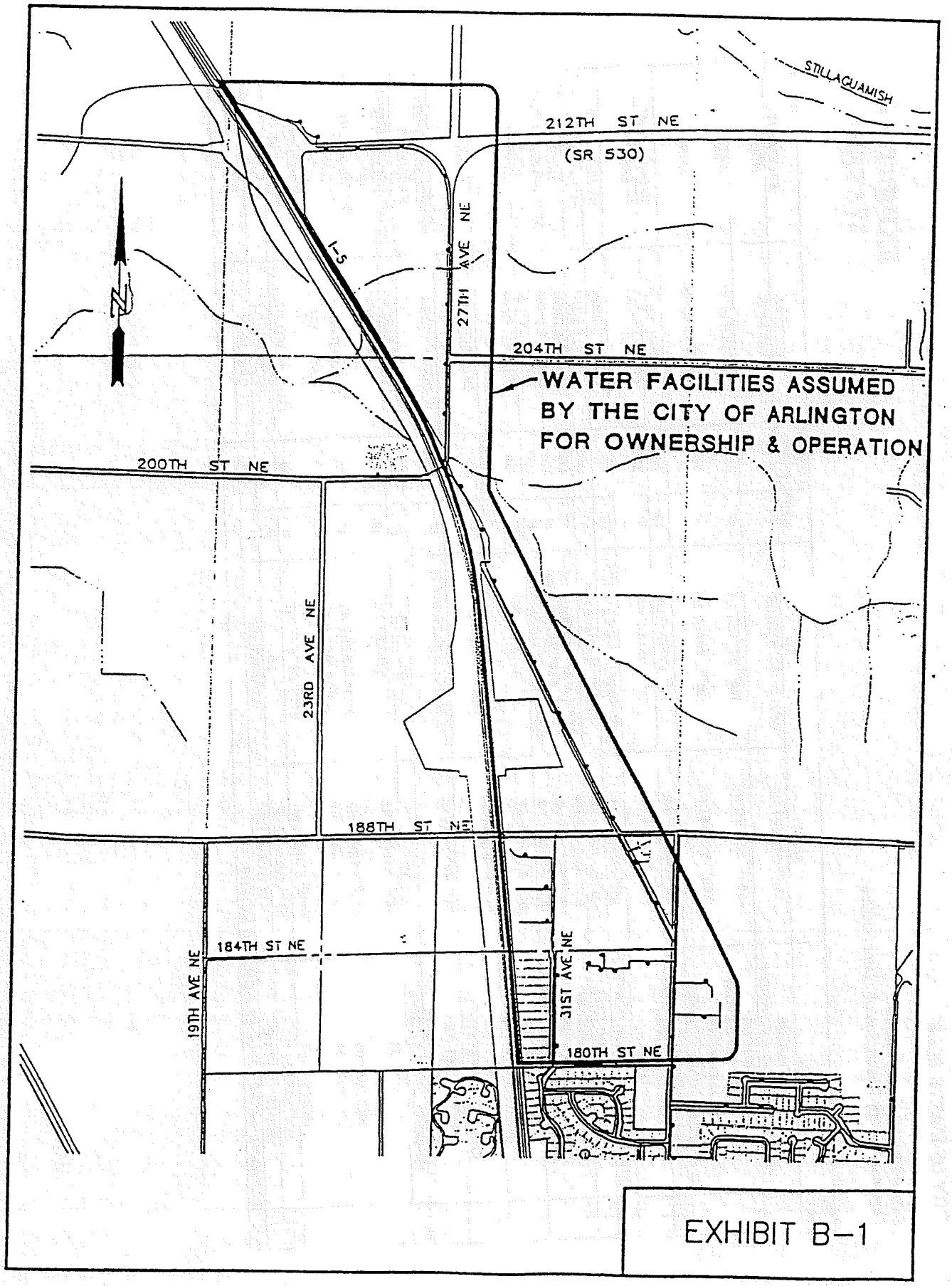
STILLAGUAMISH
212TH ST NE
(SR 530)
I-5
27TH AVE NE
204TH ST NE
WATER FACILITIES ASSUMED
BY THE CITY OF ARLINGTON
FOR OWNERSHIP & OPERATION
200TH ST NE
23RD AVE NE
188TH ST NE
184TH ST NE
19TH AVE NE
31ST AVE NE
180TH ST NE

EXHIBIT B-1

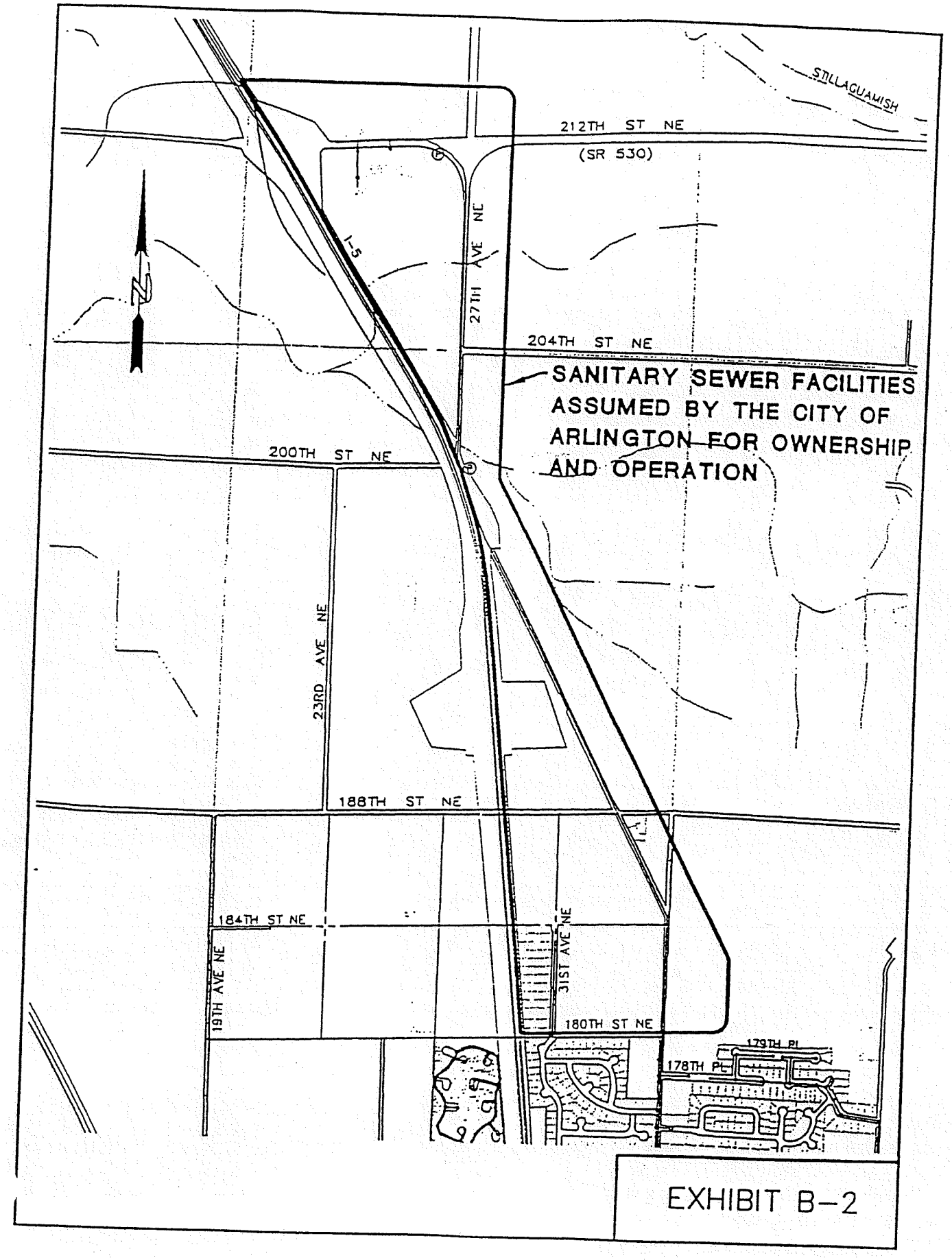
STILLAGUAMISH
212TH ST NE
(SR 530)
I-5
27TH AVE NE
204TH ST NE
SANITARY SEWER FACILITIES ASSUMED BY THE CITY OF ARLINGTON FOR OWNERSHIP AND OPERATION
200TH ST NE
23RD AVE NE
188TH ST NE
184TH ST NE
19TH AVE NE
31ST AVE NE
180TH ST NE
179TH PL
178TH PL

EXHIBIT B-2

WATER SERVICE AREA CHANGE AGREEMENT

between

CITY OF ARLINGTON and

CITY OF MARYSVILLE

An Agreement between the City of Arlington (Arlington) and the City of Marysville (Marysville), individually a "Party" and collectively the "Parties":

WHEREAS, the above Parties each provide retail water service to a Water Service Area agreed to and established in the North Snohomish County Coordinated Water System Plan and identified on the Coordinated Water Service Plan (CWSP); and

WHEREAS, Arlington and Marysville each previously signed an "Agreement for Establishing Water Utility Service Area Boundaries," on file with Snohomish County Planning and Development Services (PDS), an example of which can be found in Appendix D of the 2010 update to the North Snohomish County Coordinated Water System Plan; and

WHEREAS, the current respective water service areas of the Parties to this Agreement are indicated in Figure 1-1 of the CWSP (December 2010 edition); and

WHEREAS, Section III 2.D. of the CWSP allows service area boundaries to be revised at any time with the execution of revised service area agreements by authorized representatives of each affected purveyor; and

WHEREAS, this Agreement shall serve as an amendment to the agreements on file with PDS;

NOW, THEREFORE, the Parties hereby agree to adjust their respective water service areas to match the Proposed Boundaries on Exhibit A attached hereto and included herein by reference.

THIS AGREEMENT SHALL BE EFFECTIVE with respect to each Party when that Party's authorized representative executes the agreement. The original signature pages shall be delivered to the attention of Gary ldleburg at PDS, which maintains the file of water service area agreements under the CWSP. Copies of the signature pages shall be delivered to each Party to this Agreement. This Agreement may be executed in counterparts.

IN AGREEMENT WHEREOF, the undersigned parties execute this Agreement

City of Arlington Water Utility

Barbara Tolbert

Barbara Tolbert
City of Arlington

2/4/16
Date

City of Marysville Water Utility

John Nehring

John Nehring
City of Marysville

2/9/16
Date

Receipt Acknowledged

Gary L. Idleburg

Gary Idleburg
Senior Planner
PDS-Snohomish County

3/2/16
Date

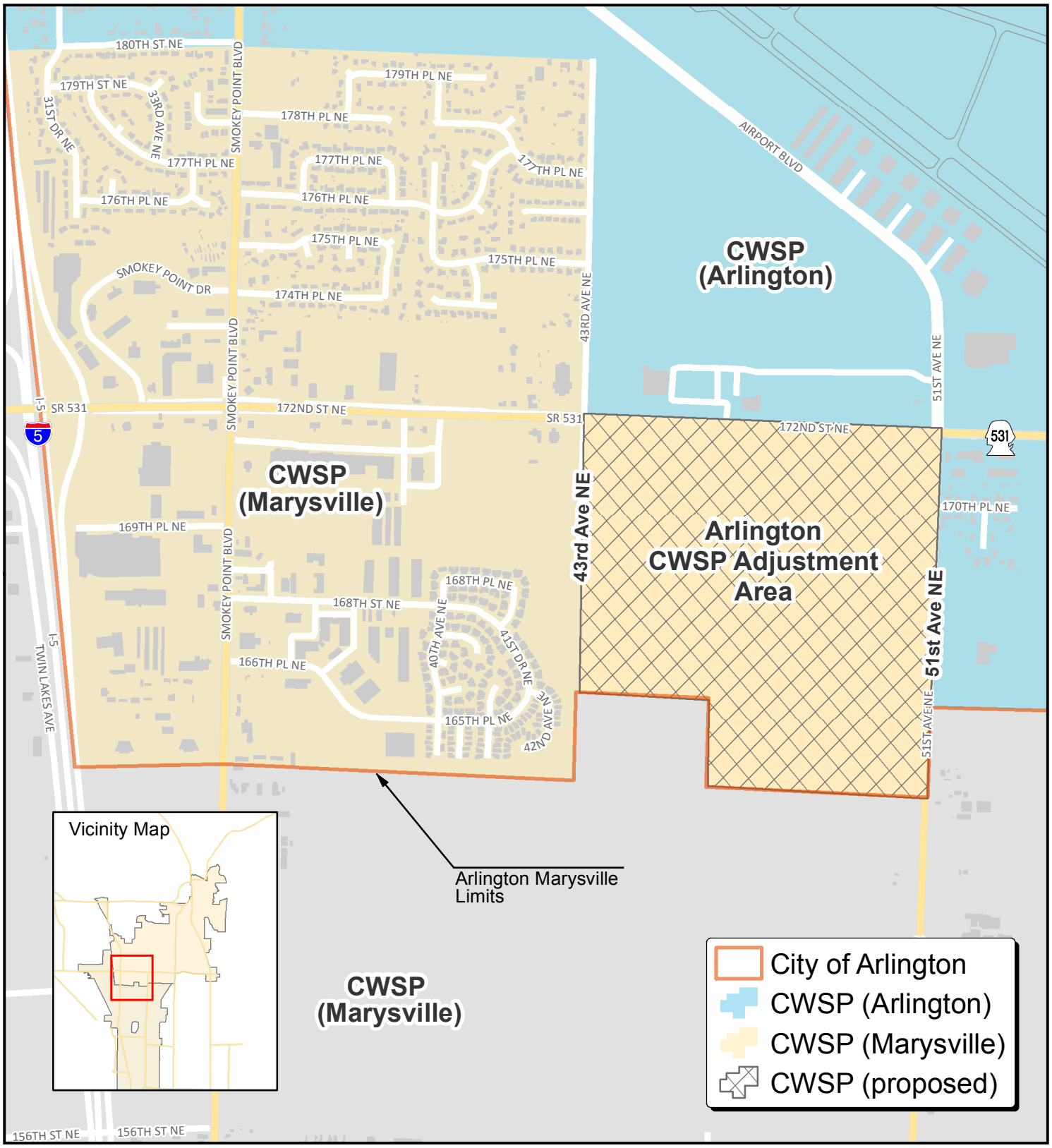

Legend

State Routes
Roads
Buildings

N

Maps and GIS data are distributed "AS-IS" without warranties of any kind, either express or implied, including but not limited to warranties of suitability for a particular purpose or use. Map data are compiled from a variety of sources which may contain errors and users who rely upon the information do so at their own risk. Users agree to indemnify, defend, and hold harmless the City of Arlington for any and all liability of any nature arising out of or resulting from the lack of accuracy or correctness of the data, or the use of the data presented in the maps.

City of Arlington

South Arlington CWSP Adjustment Exhibit A

Scale: 1 inch = 1,000 feet	File: SArlMarUtilExp8.5x11portrait_15
Date: 3/10/2016	Cartographer: akc

APPENDIX C

Agreements with Other Systems

1/10/1991

NORTH SNOHOMISH COUNTY
REGIONAL WATER SUPPLY
JOINT OPERATING AGREEMENT (JOA)

WHEREAS, an adequate and safe water supply for North Snohomish County is important to both existing citizens and the long-term comprehensive plans of the Participants and Snohomish County; and

WHEREAS, the State, Snohomish County, and public water purveyors jointly agreed to prepare a Coordinated Water System Plan (CWSP) for North Snohomish County; and

WHEREAS, the preliminary finding and recommendations of the CWSP concludes that projects that provide for the joint use and operation of transmission, storage, and pumping facilities as defined by the CWSP, is in the best interest of the citizens of the County; and

WHEREAS, independent of the preliminary findings and recommendations of the CWSP, the current and near-term water needs of the City of Marysville (Marysville), Tulalip Tribes (Tribes), and Public Utility District No. 1 of Snohomish County (PUD) require immediate steps to construct a transmission line to the Sunnyside vicinity.

NOW THEREFORE, Marysville, the PUD, the Tribes, (Participants) as the initial signatories to this JOA, agree as follows:

1. GENERAL

A. There is an immediate need for additional water supply in North Snohomish County; and

B. A proposed 30 inch pipeline (Pipeline) from the Everett Transmission line to the Sunnyside vicinity, to be contracted and owned by Marysville, is consistent with the preliminary findings of the CWSP and the near-term needs of the Participants; and

C. The issues concerning the rights of the City of Everett to deliver water to Marysville, the Tribes, and the PUD for retail distribution as defined by the Amended Agreement Between PUD No. 1 of Snohomish County and the City of Everett for Multipurpose Development of the Sultan River are resolved and met by this JOA; and

D. The Participants will assist Marysville, as the lead agency, in completing the necessary environmental review of relevant actions proposed, including the construction of the Pipeline per the agreement of the Participants herein and associated SEPA documents (SEIS and FEIS) and be responsive to such environmental findings in accordance with SEPA; and

E. The Participants acknowledge the requirement to incorporate land use planning in water supply planning; and

F. The Participants recognize that any delay may result in higher cost for the proposed Pipeline, in which all Participants will share proportionately; and

G. A fundamental incentive for the Participants to enter into this JOA is the commitment of all of the Participants to cooperate toward regional solutions for long range water supply needs through the year 2040.

2. INTENT

A. The general intent of the Participants is to cooperatively plan, design, construct, operate, and maintain the water transmission pipelines and related facilities generally identified in Attachment A.

B. The specific intent of this JOA is to initiate the construction of the Pipeline, allocate its capacity to the Participants, and provide for future cooperation. Prior to completion of the Pipeline the Participants agree to amend this JOA pursuant to 3D.

C. It is the desire of the Participants that this JOA be incorporated into a final CWSP. When the CWSP is completed and approved by the State Department of Health, (Health) this JOA will be amended to provide for implementation of the CWSP provisions consistent with the JOA.

3. SCHEDULE - REGIONAL PROJECTS

A. The Participants agree to cooperate with Marysville, the lead agency, in the Environmental Review, as defined in paragraph 1D to be completed on or about February 28, 1991.

B. The Participants agree to expedite completion of the construction of the Pipeline as early in 1991 as possible, consistent with appropriate environmental review and permitting requirements, with a goal of completing the project by September 1, 1991.

C. The Participants agree to immediately initiate joint negotiations with the City of Everett for a regional wholesale water contract rate.

D. Prior to Pipeline completion, the Participants will develop detailed procedures for the management, operation, maintenance, and financing of the Pipeline and associated JOA projects as an amendment to this JOA.

E. Within 6 months following the CWSP approval by Health and subject to the unanimous agreement of the Participants, the JOA will be amended to incorporate the recommendations for development of additional facilities, as outlined in the CWSP that are consistent with the JOA.

4. WATER SUPPLY - CAPACITY RIGHTS

Unless otherwise modified in writing and agreed to by all parties, the capacity rights and the cost share agreed to herein shall be as outlined below.

A. Capacity Rights - Each Participant shall be entitled to purchase capacity in the Pipeline in proportion to the year 2010 Peak Day demand forecast, as shown on attachment B. Capacity rights will be based on the percentage of actual pipeline capacity which is estimated to range from 17.3 - 20 MGD, depending on operating conditions. Each participant will pay the percentage of the cost of the pipeline that corresponds to the percentage of capacity, as specified in Table 1, within 60 days of the date that Marysville gives notice to the Participants of completion of the Pipeline and the estimated cost of the same. The final cost will be based on the audited record of the project and Participant payments will be adjusted accordingly. If a Participant fails to make full payment within 60 days, the remaining Participants will have the option to purchase the capacity rights of the non-paying Participant in the same ratio of their assigned capacity per Table 1. Any capacity not purchased by the PUD or Tribe shall remain with Marysville.

Table-1

Assigned Capacity Rights

	% of Pipeline Capacity
Marysville	56.44
PUD	16.55
Marysville/PUD Overlap	7.21 **
Tribes	19.80
Total	100.00

** The Marysville/PUD overlap area supply will be assigned to the utility eventually providing service to the area, with the initial assignment of the Pipeline capacity being divided equally between Marysville and the PUD. Payment to Marysville will be adjusted when final capacity assignments are determined.

B. Operation and Maintenance - As provided in 3D, the Participants will establish operation and maintenance (O&M) charges that include a minimum charge and a charge based on quantity of water delivered. O&M payments will be made on a monthly basis.

C. Additional JOA Participants. Other agencies can purchase capacity rights from the Pipeline only with unanimous consent of the Participants. Other agencies will be given the opportunity to become a JOA participant for future projects.

D. Wholesaling Water. A Participant claiming the right to wholesale water delivered through the Pipeline may do so as long as the other Participants to the JOA are not negatively impacted, and the Participant in fact has legal authority to wholesale such water.

Wholesaling outside a Participants designated service area (per Attachment A) shall not trigger or impact the provisions of paragraphs 4E or 4H without the agreement and concurrence of the other Participants.

E. Tulalip Tribes Supply. The Tribes' capacity rights are based on the Pipeline capacity to the Sunnyside Standpipe. Marysville agrees to wheel water to the Tribes' as shown in Table 1, to the extent possible within the capacity limits of Marysville's existing distribution system while also providing for Marysville's own use of said system. In order to wheel the capacity rights as shown in Table 1, it may eventually be necessary to upgrade Marysville's distribution system. The cost for those necessary upgrades shall be paid proportionately on the basis of benefits received. A wheeling charge shall be established by the two parties.

It is anticipated that additional transmission and storage facilities will be constructed in the 116th Street area when additional capacity for the Tribes and Marysville is needed or other system improvements are made. The estimated quantity of water available to the Tribes by the year 2040 is based on the Tribes' projections as shown on Attachment B.

F. Additional Facilities. The Participants agree that the Pipeline will meet only a portion of the Participants' future projected needs and that additional facilities, including a second pipeline intertie with Everett and a regional reservoir, will be required.

Projected needs will be identified annually based on the Participants designated service areas. The preliminary designated service area and projections are shown in Attachments A & B.

Planning for these additional facilities will commence no later than the date on which any Participant's demand on the Pipeline reaches 60 percent of said Participant's capacity rights, as enhanced by Lease Backs, if any. Construction of additional facilities will commence no later than the date on which any Participant's demand on the Pipeline reaches 85 percent of said Participant's capacity rights, as enhanced by Lease Backs, if any.

G. Quality. The objective of the Participants is to maintain the quality of the water in the Pipeline at the same quality required to meet State drinking water standards.

H. Financing. Financial participation in additional facilities will be based on each Participant's projected need for each such facility.

I. Lease Back Capacity Rights. The actual water needs of each Participant will be reviewed annually against the projected need which shall be calculated to the completion date of construction for additional capacity. If additional facilities will not be completed prior to the time projected needs of a Participant exceed the capacity rights of the Participant, then the remaining Participants agree to lease unused capacity rights in excess of their projected

needs. Lease terms shall include payments to the lessor based upon a proportionate cost of the lessor's Debt Service and Operation and Maintenance (O & M) for the leased capacity. Leases shall terminate upon availability of additional capacity from additional facilities unless otherwise agreed by the Participants.

5. COSTS

A. The cost of the Pipeline shall include the cost of construction, as defined in the State BARS system exclusive of legal fees incurred in litigation directly between Participants in this Agreement.

B. O & M costs for the Pipeline shall include costs as defined in the State BARS system that are directly attributable to operation and maintenance of the Pipeline. Marysville will establish separate accounting for O & M costs for the Pipeline.

C. Debt Service for each Participant shall include either actual Debt Service on debt issued for the Participant's proportionate share, or the amortized value at 8 percent over 20 years for cash spent by the Participant for its proportionate share, or a combination of both, if applicable.

6. INCENTIVE FOR PARTICIPATION

If a Participant fails to participate in the planning, financing, or construction of additional facilities as outlined in the CWSP and generally identified on Attachments A and B, said Participant will be required to sell to the other Participants any then unused capacity rights in the Pipeline at cost.

7. REOPENER OF AGREEMENT

The Participants agree to act in good faith to assist the City of Marysville in completing the Pipeline by September 1, 1991. The Participants agree to seek all lawful means to expedite completion of the project in accordance with the schedule outlined in the FEIS. Should any Participant breach this covenant of good faith and fail to jointly pursue all lawful means to complete construction of the Pipeline the non-defaulting Participants may reopen the JOA.

8. ADMINISTRATIVE, LEGAL AND OTHER PROVISIONS

All Participants reserve the legal rights to challenge any documents promulgated in relation to the CWSP water supply program, except this document and the related Pipeline project. This document is binding upon the Participants except for allegations of the breach of this agreement by a Participant.

The execution of this JOA and the participation of the Tulalip Tribes in the processes contemplated by the JOA do not constitute nor imply any abrogation, diminishment or waiver of its existing or reserved rights or sovereign powers, whether arising under treaty, statute or common law.

IN WITNESS WHEREOF, the Participants hereto have caused this agreement to be executed by their proper Officers on the 10th day of January 1991.

City of Marysville

By: Rita Matheny
Rita Matheny, Mayor

Attest:

By: Phillip E. Dexter
Phillip E. Dexter, City Clerk

Approved As To Form:

By: Grant K. Weed
Grant Weed, City Attorney

Public Utility District No. 1
of Snohomish County

By: Charles N. Earl
Charles N. Earl
District Manager

Approved as to form:

By: Douglas S. Hale
Dated: 1/11/91

The Tulalip Tribes of Washington

By: Stanley G. Jones Sr.
Stanley G. Jones, Sr.
Chairman

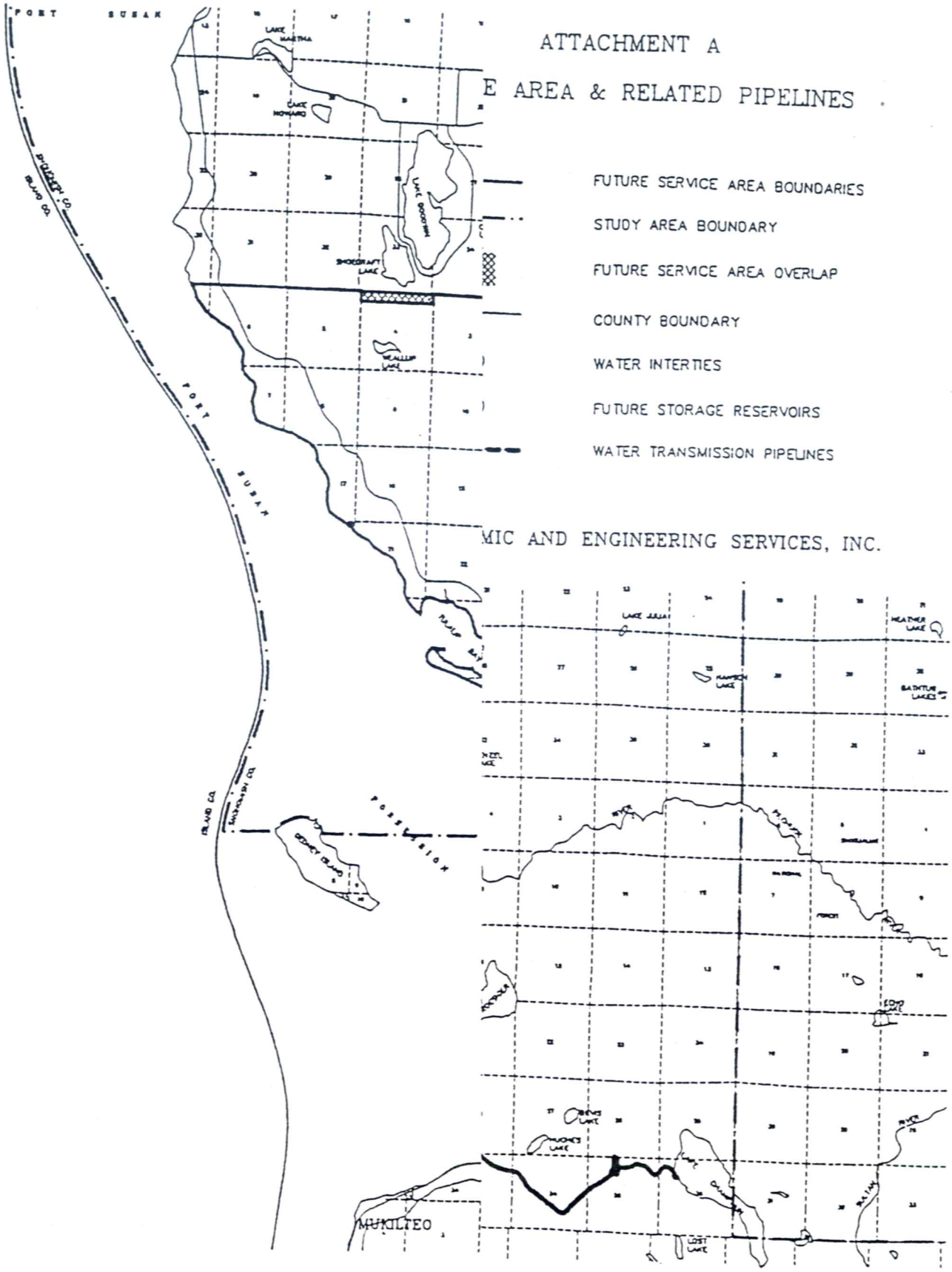
ATTACHMENT A
E AREA & RELATED PIPELINES
FUTURE SERVICE AREA BOUNDARIES
STUDY AREA BOUNDARY
FUTURE SERVICE AREA OVERLAP
COUNTY BOUNDARY
WATER INTERTIES
FUTURE STORAGE RESERVOIRS
WATER TRANSMISSION PIPELINES
MIC AND ENGINEERING SERVICES, INC.
FORT SUSAN
LAKE MARTHA
LAKE HOWARD
LAKE GOODWIN
SHOCKEYAFT LAKE
MCALLUP LAKE
FORT SUSAN
ISLAND CO.
SNOHOMISH CO.
FORESHORE
MUKILTEO
LAKE JULIA
HEATHER LAKE
HAMPTON LAKE
BATHTUB LAKES
LOST LAKE

ATTACHMENT B

WATER REQUIREMENTS FORECAST FOR
MARYSVILLE - LAKE STEVENS - TULALIP TRIBES SERVICE AREAS (1)

(Peak Day MGD)

SERVICE AREA	YEAR 2000	2010	2020	2040
Marysville (2)	9.71	11.66	13.68	17.72
Lake Stevens/PUD	0.75	3.42	5.93	10.96
Marysville/PUD Overlap (3)	1.04	1.49	2.05	3.17
Tulalip Tribes	3.11	4.09	5.34	6.39
TOTAL	14.61	20.66	27.00	38.24

Footnotes:

(1) Forecast as currently developed through the Coordinated Water System Plan.

(2) Demand forecast assumes current supply of 1.9 MGD from Edwards Springs and Lake Goodwin wells will serve other users.

(3) Demand to be assigned to utilities based upon final resolution of service area overlap.

11/6/89

WATER SUPPLY CONTRACT

This Contract is made and entered into by and between the City of Everett, a municipal corporation of the State of Washington, hereinafter referred to as "Everett," and the City of Marysville, a municipal corporation of the State of Washington, hereinafter referred to as "Marysville."

WHEREAS, Everett owns and operates a water supply system located in the Sultan Basin of Snohomish County, Washington. Said system has regional supply capability for domestic, commercial and industrial water consumption; and

WHEREAS, pursuant to RCW 35.92.170 and 35.92.200 Everett is authorized to enter into contracts with other municipalities to supply said municipalities with water. Pursuant to WAC 248-54 Everett has prepared a Water System Plan identifying certain areas of north Snohomish County as being within its long-range wholesale water supply service area; and

WHEREAS, Marysville owns and operates a water supply system in north Snohomish County, Washington, and Marysville distributes said water on a retail basis to domestic, commercial and industrial customers within its city limits and within the boundaries of a larger area surrounding the city known as the Rural Utility Service Area ("RUSA"). The boundaries of RUSA have been approved by the Snohomish County Boundary Review Board, and any amendments thereto are subject to review and approval by said Board. Marysville also has certain wholesale water intertie agreements with surrounding municipalities, water districts and public water purveyors; and

ORIGINAL

WHEREAS, Marysville is in need of a major new source of water to meet the existing and projected demands of its water distribution system. A study of available and alternative sources has identified Everett as being the best source for wholesale water supply in the foreseeable future. Pursuant to WAC 248-54 Marysville has updated its Water System Plan to include an intertie with Everett;

NOW, THEREFORE, for the mutual benefits to be derived the parties agree as follows:

1. Sale of Water. Everett hereby agrees to sell to Marysville, and Marysville hereby agrees to buy from Everett, treated water in accordance with its usual and accustomed rates and conditions for customers similarly situated.

2. Point of Delivery. Everett shall deliver water to Marysville at an agreed point of delivery along Everett's Northern Transmission Pipeline corridor. Said point of delivery shall be located at the intersection of Hewitt Avenue East (20th Street S.E.) and the BPA power line right-of-way. Marysville shall install, at its cost, a master meter system at the point of delivery. Said master meter installation shall include telemetry of flow data and any necessary control functions and shall meet the specifications and approval of Everett and shall become the property of Everett after its installation. The point of delivery shall be the upstream flange of the valve downstream of said master meter and check valve.

3. Quantity of Water. Marysville will construct a 24-inch or 30-inch-diameter transmission pipeline at the point of delivery. Everett

shall not be responsible for storage or pressure variances. Everett agrees to use best efforts to provide a regular and uninterrupted supply of water at said point of delivery throughout the term of this contract. It is understood that Marysville anticipates ultimately reaching average peak demands of 18 million gallons per day. Average peak demands anticipated in the near future are shown on Table I attached hereto. Everett's facilities have, or will have in the future, the capacity to supply Marysville's water quantity demand. Everett and Marysville shall develop a technical operating plan to accommodate the operational needs of both parties. The quantity of water delivered shall be measured by the master meter referred to in paragraph 2 above. Nothing herein, however, shall be construed as obligating Marysville to take or purchase any minimum quantity of water from Everett at any time except as Everett's rates require minimum payment related to connection size.

4. Quality of Water. Everett agrees that all water delivered to Marysville at the point of delivery shall be of the same standard and quality as that normally delivered by Everett to master meter customers east of the Snohomish River. Everett shall be responsible for meeting state and federal standards for safe, high-quality drinking water at the point of delivery. All water supplied by Everett for use or sale by Marysville shall be upon the express condition that after it has passed the point of delivery the same becomes the property of Marysville, and Everett shall not be liable for any damages or loss resulting from degradation of water quality which may occur beyond said point. Further, Everett shall not be responsible for

changes in water quality or operating problems which may result from mixing of different sources of water in the Marysville system. If Marysville maintains other sources, it shall provide means to assure that non-Everett water will not backflow into the Everett system.

5. Rates and Charges. Rates shall be established by ordinance of the City of Everett. The current water rate under Ordinance No. 1256-86, Section 3B(2) is incorporated herein by reference. Everett agrees that Marysville shall be served with notice of any future rate modifications that will impact Marysville at least thirty (30) days prior to consideration of said ordinance by the Everett City Council. Rates shall be based on cost-of-service principles in any future rate adjustment; provided that it is agreed that the "outside the city limits" surcharge of up to 25% on non-filtration charges shall apply to the Marysville rate. Current and future rates shall exclude in-City water distribution costs.

6. Payments by Marysville. Everett shall bill Marysville for water delivered through the master meter on a monthly basis. Said bill shall be payable within thirty (30) days after receipt of the invoice. Delinquent bills shall accrue interest at the rate of 12% per annum.

7. Resale or Distribution of Water by Marysville. After water has passed the point of delivery and has entered Marysville's transmission pipeline, said water becomes the property of Marysville and the use and distribution of the same shall be under the exclusive authority of Marysville, subject only to the following express limitations:

a. Marysville shall not allow any new retail or wholesale customer connections to any portion of its water system which is transmitting water purchased from Everett if said

connection is 12 inches in diameter or greater, or supplies more than one million gallons per day, unless Marysville first obtains approval from Everett for such connections. For example, Marysville shall not supply any major resource recovery facility with water purchased from Everett without first obtaining approval from Everett.

b. Marysville will distribute water purchased from Everett in a manner consistent with the Water System Plans of Everett and Marysville, as approved by the Washington State Department of Health.

c. Marysville shall not serve water purchased from Everett in areas outside the service area shown in Exhibit A hereto.

8. Term of Contract. The term of this Contract shall be from the date of its mutual acceptance by both cities until July 1, 2020. Marysville shall have a right to renew this Contract for an extended term of similar duration and for a quantity of water at least as large as that specified herein.

9. Construction, Operation and Maintenance of Capital Improvements. Marysville shall construct all capital improvements to the water system and shall own all capital improvements downstream from the point of delivery, and shall assume exclusive responsibility for the operation, maintenance and repair of the same. All construction, operation, maintenance and repairs shall be in strict compliance with standards approved by the Washington State Department of Health. By separate agreement, Marysville may contract with Everett for certain inspection, repair and maintenance services relating to the transmission main. Marysville shall annually provide a water system report to include number of customers, consumption, peak use, and other information useful in optimizing joint operations.

10. Uncontrollable Forces. Neither party hereto shall be considered to be in default in respect to any obligations hereunder if prevented from fulfilling such obligations by reason of uncontrollable forces. Either party rendered unable to fulfill any obligation hereunder by reason of an uncontrollable force shall exercise due diligence to deal with such uncontrollable force with all reasonable dispatch.

11. Legal Relationship of the Parties; Indemnification.

a. It is agreed that the operation of the wholesale water intertie, and the transmission and distribution of water downstream from the point of delivery, is Marysville's sole responsibility and that Marysville is not acting in any capacity as an agent or representative of Everett, nor are the cities acting in joint venture on this project. If any litigation, liability, costs or damages arise from said actions, Marysville agrees to indemnify and hold Everett harmless from the same.

b. Marysville shall be solely responsible for conducting all environmental reviews, preparing all engineering plans, acquiring all right-of-way, and obtaining al governmental approvals for this intertie project. If any litigation, liability, costs or damages arise from said action, Marysville agrees to indemnify and hold Everett harmless from the same.

c. Everett shall be solely responsible for obtaining approval of its updated Water System Plan relating to this intertie, and assuring that this intertie is consistent with the November 17, 1981, contract between Everett and Public Utility District No. 1 of Snohomish County relating to the use of wager generated by the Sultan Basin project. If any litigation, liability, costs or damages arise from said actions, Everett agrees to indemnify and hold Marysville harmless from the same. Provided that said indemnification shall exclude any costs or damages incurred by Marysville as a result of causes beyond the control of Everett including but not limited to a court order prohibiting performance of Everett's obligations under this agreement.

12. Assignment; Successors Bound. Neither this Contract nor any right or privilege herein shall be assigned by either party without the written

consent of the other party. This Contract shall apply to and be binding upon the lawful successors of either party.

13. Notices. All notices complying with this Contract shall be sent by registered mail as follows:

To the City of Everett;

Mayor
City of Everett
Everett City Hall
3002 Wetmore Avenue
Everett, WA 98201

To the City of Marysville:

Mayor
City of Marysville
Marysville City Hall
514 Delta Avenue
Marysville, WA 98270

IN WITNESS WHEREOF, the parties have caused this Contract to be approved by their respective Mayors and City Councils on the dates indicated below.

DATED: [illegible]

CITY OF EVERETT

WILLIAM E. MOORE, Mayor

ATTEST:

CITY CLERK

APPROVED AS TO FORM:

CITY ATTORNEY

(0067+)

DATED: 6th November, 1989

CITY OF MARYSVILLE

RITA MATHENY, Mayor

ATTEST:

CITY CLERK

APPROVED AS TO FORM:

CITY ATTORNEY

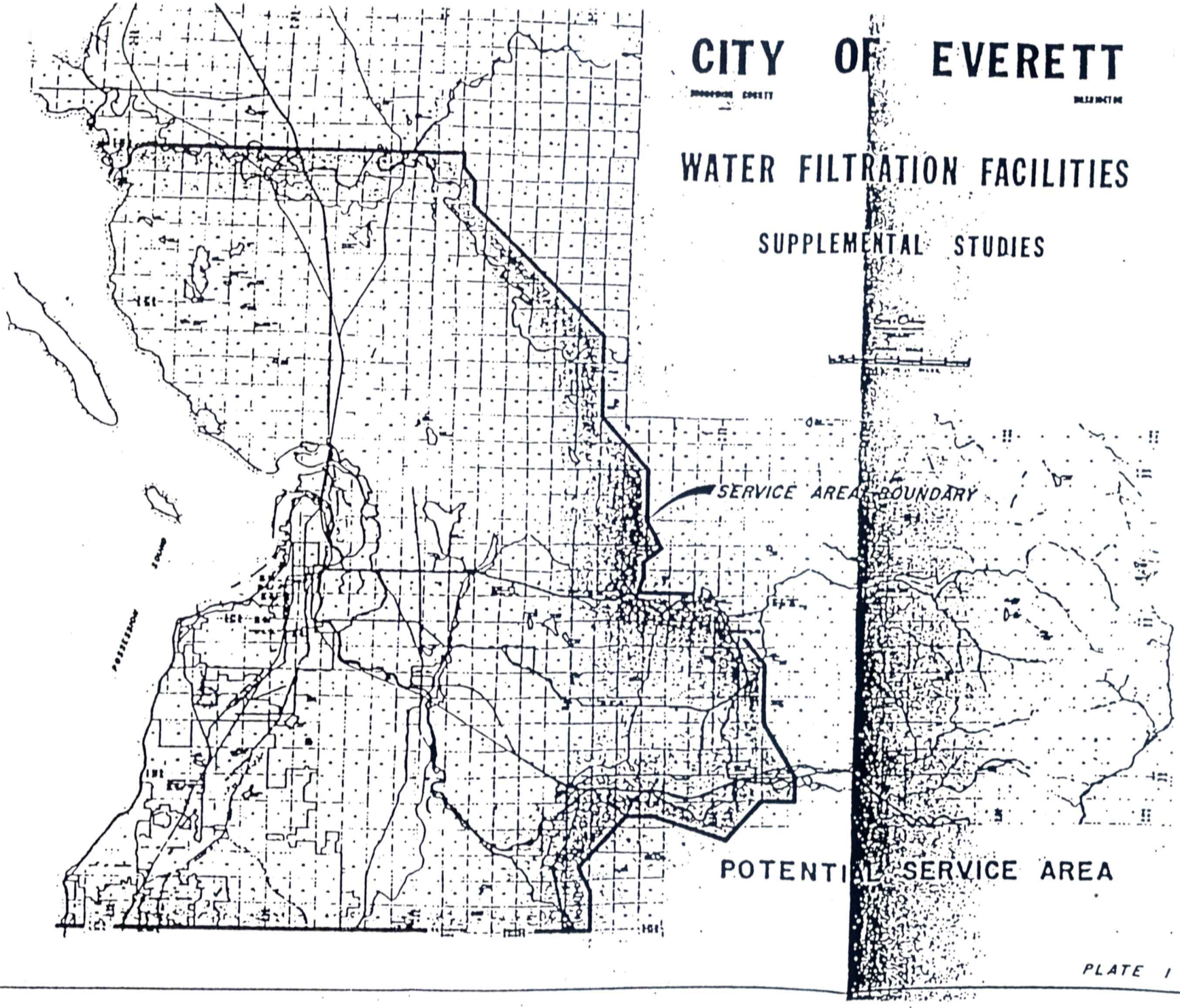
CITY OF EVERETT
WATER FILTRATION FACILITIES
SUPPLEMENTAL STUDIES
SERVICE AREA BOUNDARY
POTENTIAL SERVICE AREA
PLATE 1

TABLE1

Marysville Water Supply Demand (Approx.)

	Oct. - Mar. Daily Avg.[3]/Peak[1]		Apr. - Sept. Daily Avg.[2]/Peak[1]		Average Year Daily Avg./Peak[1]	
	(ADD)	(MDD)	(ADD)	(MDD)	(ADD)	(MDD)
1988	3.045	6.091	3.902	7.804	3.388	6.78
1990	3.240	6.481	4.152	8.304	3.605	7.21
1995	3.754	7.507	4.809	9.619	4.176	8.352
2000	4.294	8.588	5.502	11.003	4.777	9.554
2005	4.850	9.701	6.214	12.429	5.396	10.792
2010	5.408	10.805	6.929	13.857	6.016	12.032
2015	5.952	11.905	7.626	15.253	6.622	13.244
2020	6.470	12.940	8.290	16.58	7.198	14.396
2025	6.952	13.904	8.907	17.814	7.734	15.468
2030	7.390	14.779	9.468	18.936	8.221	16.442
2035	7.779	15.558	9.967	19.933	8.654	17.308
2040	8.120	16.241	10.404	20.809	9.034	18.068

[1]Peaking factor assumed = 2.0
[2]Seasonal (summer) factor = 1.152
[3]Seasonal (winter) factor = 0.899

2. Master Meters.

a. Master meter rates shall be required for water districts, water associations or other organizations providing water service to 100 or more permanent services. Organizations serving less than 100 services and all other customers shall be charged at the individual meter rate.

b. The consumption charges for master meters shall be as follows:

i. For master meters connected east of the Snohomish River the water charge shall be:

First 1,000 cu. ft., 0-1,000 cu. ft.	$ 8.78
Next 1,000 cu. ft., 1,000-2,000 cu. ft.	.53 per 100 cu. ft.
Next 7,000 cu. ft., 2,000-9,000 cu. ft.	.40 per 100 cu. ft.
Next 211,000 cu. ft., 9,000-220,000 cu. ft.	.15 per 100 cu. ft.
Over 220,000 cu. ft.	.11 per 100 cu. ft.

In addition to said water charge, there shall be added a 25% surcharge and then to such charge there shall be added a filtration charge of $.24 per 100 cu. ft. to arrive at the total monthly charge. No surcharge shall be applied to the filtration charge;

provided that the minimum monthly charge shall be:

Meter Size	Minimum Water Charge	Minimum Filtration Charge	Total Minimum Charge
1/2 thru 1 inch	$ 8.78	$ 2.40	$ 11.18
2 inch	9.84	2.88	12.72
3 inch	12.49	4.08	16.57
4 inch	15.28	5.72	21.00
6 inch	18.88	7.68	26.56
8 inch	24.08	10.80	34.88
10 inch	38.88	19.68	58.56
12 inch	75.83	75.60	151.43

In addition to the minimum water charge, there shall be added a 25% surcharge. No surcharge shall be added to the filtration charge.

ii. For master meters connected west of the Snohomish River, the charge shall be as follows:

Basic Charge:

(without pumping) . . . . . $.33 per 100 cu. ft.
(with pumping) . . . . . $.42 per 100 cu. ft.

plus the

Filtration Charge: . . . . . $.24 per 100 cu. ft.

CITY OF MARYSVILLE
Marysville, Washington

RESOLUTION NO. 1387

A RESOLUTION OF THE CITY OF MARYSVILLE AUTHORIZING THE EXECUTION OF A LONG-TERM WHOLESALE WATER SUPPLY CONTRACT WITH THE CITY OF EVERETT.

WHEREAS, the City of Marysville is in need of a major new source of water to meet the existing and projected demands of its water distribution system. A study of available and alternative sources has identified the City of Everett as being the best source for wholesale water supply in the foreseeable future. Pursuant to WAC 248-54, the City of Marysville has updated its Water Supply Plan to include an intertie with the City of Everett's water system; and

WHEREAS, pursuant to RCW 35.92.170, 35.92.200 and 35A.80.010, the City of Marysville and the City of Everett are authorized to enter into a Wholesale Water Supply Contract; and

WHEREAS, a Wholesale Water Supply Contract has been negotiated between the cities and it would be in the best interest of the City of Marysville, and its retail water customers, for the same to be immediately signed;

NOW, THEREFORE, BE IT RESOLVED BY THE CITY COUNCIL OF THE CITY OF MARYSVILLE, WASHINGTON AS FOLLOWS:

The City of Marysville hereby consents to the terms of the Water Supply Contract with the City of Everett, a copy of which is attached hereto and incorporated herein by this reference, and hereby authorizes the Mayor to sign the same on behalf of the City.

PASSED BY THE CITY COUNCIL AND APPROVED BY THE MAYOR THIS 6th DAY OF November, 1989.

CITY OF MARYSVILLE

By Rita Mathews
Mayor

Attest:

Phillip E Dexter
City Clerk

Approved as to form:

City Attorney

CITY OF MARYSVILLE
Marysville, Washington

RESOLUTION NO. 1387

A RESOLUTION OF THE CITY OF MARYSVILLE AUTHORIZING THE EXECUTION OF A LONG-TERM WHOLESALE WATER SUPPLY CONTRACT WITH THE CITY OF EVERETT.

WHEREAS, the City of Marysville is in need of a major new source of water to meet the existing and projected demands of its water distribution system. A study of available and alternative sources has identified the City of Everett as being the best source for wholesale water supply in the foreseeable future. Pursuant to WAC 248-54, the City of Marysville has updated its Water Supply Plan to include an intertie with the City of Everett's water system; and

WHEREAS, pursuant to RCW 35.92.170, 35.92.200 and 35A.80.010, the City of Marysville and the City of Everett are authorized to enter into a Wholesale Water Supply Contract; and

WHEREAS, a Wholesale Water Supply Contract has been negotiated between the cities and it would be in the best interest of the City of Marysville, and its retail water customers, for the same to be immediately signed;

NOW, THEREFORE, BE IT RESOLVED BY THE CITY COUNCIL OF THE CITY OF MARYSVILLE, WASHINGTON AS FOLLOWS:

The City of Marysville hereby consents to the terms of the Water Supply Contract with the City of Everett, a copy of which is attached hereto and incorporated herein by this reference, and hereby authorizes the Mayor to sign the same on behalf of the City.

PASSED BY THE CITY COUNCIL AND APPROVED BY THE MAYOR THIS 6th DAY OF November, 1989.

CITY OF MARYSVILLE

By Rita Mathews
Mayor

Attest:

Phillip E. Dexter
City Clerk

Approved as to form:

City Attorney

10/15/91

EVERETT AND JOA PARTICIPANTS
WATER SUPPLY CONTRACT

THIS CONTRACT is made and entered into by and between the City of Everett, a municipal corporation of the State of Washington, hereinafter referred to as "Everett," and the City of Marysville (Marysville), and Public Utility District No. 1 of Snohomish County (PUD), municipal corporations of the State of Washington, and the Tulalip Tribes of Washington (Tribes), a federally recognized Indian Tribe, hereinafter referred to as "Participants."

WHEREAS, Everett owns and operates a water supply system located in the Sultan Basin of Snohomish County, Washington. Said system has regional supply capability for domestic, commercial and industrial water consumption; and

WHEREAS, pursuant to RCW 35.92.170, RCW 35.92.200 and RCW 39.94, Everett is authorized to enter into contracts with other municipalities and recognized tribes to supply said municipalities with water. Pursuant to WAC 248-54, Everett has prepared a Water System Plan identifying certain areas of north Snohomish County as being within its long-range wholesale water supply service area; and

WHEREAS, the Participants own and operate water supply systems in north Snohomish County, Washington, and distribute said water on a retail basis to domestic, commercial and industrial customers within their respective service areas; and

WHEREAS, the Participants have entered into a Joint Operating Agreement (JOA) for the purpose of initiating construction of a 30-inch pipeline by Marysville from the Everett transmission line to the Sunnyside vicinity, allocating pipeline capacity among the Participants, and cooperating in a regional solution to meet future water supply needs; and

WHEREAS, the Participants together with Washington State, Snohomish County, Everett and other public water purveyors have jointly agreed to prepare a Coordinated Water System Plan (CWSP) for north Snohomish County; and

WHEREAS, the execution of this contract and the participation of the Tribes in the processes contemplated by the contract do not constitute nor imply any abrogation, diminishment or waiver of the Tribes existing or reserved rights or sovereign powers, whether arising under treaty, statute or common law; and

WHEREAS, the preliminary findings and recommendations of the CWSP demonstrate an immediate need for additional water supply to meet current and near term water needs of the Participants and a need for long-term regional solutions through joint use and operation of water transmission and storage facilities; and

WHEREAS, a study of available and alternative sources has identified Everett as being the best source for water supply for the Participants' service areas in the foreseeable future. Pursuant to WAC 248-54, Marysville and Everett have updated their respective Water System Plans to include an intertie with Everett;

NOW, THEREFORE, for the mutual benefits to be derived, the parties agree as follows:

1. Delivery of Water. Everett hereby agrees to deliver to the Participants, and the Participants hereby agree to pay Everett for the delivery and treatment of water to be used as their primary source of supply in accordance with its usual and accustomed rates and conditions for customers similarly situated and as provided in Section 5 hereof.

2. Point of Delivery. Everett shall deliver water to the Participants at agreed connection points along Everett's Northern Transmission Pipeline corridor. Said agreed connection points include existing connections located at 73rd Avenue S.E., 91st Avenue S.E., 103rd Avenue S.E. and at Williams Road. Said agreed connection points also include new connections to be located at Woods Creek Road and the Seattle City Light power line right-of-way (Seattle R/W). Other future connection points shall be subject to mutual agreement. Participants shall install, at their cost, a master meter system at the Seattle R/W new connection point. Said master meter installation shall include telemetry of flow data and any necessary control functions and shall meet the specifications and approval of Everett and shall become the property of Everett after its installation. The Woods Creek Road new connection and other future connections shall be installed per Everett's standard policies for new service connections or by other mutually agreeable means. The actual point of delivery at each connection point shall be the upstream flange of the valve downstream of each master meter and check valve.

3. Quantity of Water. Marysville will construct a 30-inch pipeline from the Seattle R/W point of delivery as Phase 1 of the preliminary CWSP and JOA. Everett and the Participants agree that each have, and will continue to make significant capital

investments in water supply facilities which are interdependent, and that coordinated planning will be required throughout the term of this contract to maximize public benefits and minimize costs. In the design of Marysville's 30-inch pipeline and future Participants' water supply projects, Everett shall not be responsible for storage except as it relates to Everett's existing storage at Lake Chaplain. Everett agrees to use best efforts, subject to meeting the requirements of all Everett customers, to provide a regular and uninterrupted supply of water at said point of delivery. (Everett will exercise best efforts to operate so as to supply water at a hydraulic head of not less than 440' mean sea level at the Seattle R/W connection point and the hydraulic equivalent at other connection points throughout the term of this contract.) It is understood that the Participants will reach peak demands of 18 million gallons per day through Marysville's transmission pipeline before the expiration of this contract and that additional facilities, including a second pipeline connection to Everett and a regional reservoir, will be required to meet long range demands. Estimated average daily demands and peak day demands of the Participants, for the near future (Phase 1) are shown on Exhibit A attached hereto. Everett's facilities have, or will have in the future, the capacity to supply the Participants' water quantity demands. Everett and the Participants shall develop a technical operating plan to accommodate the operational needs of the parties. The quantity of water delivered shall be measured by the master meters referred to in paragraph 2 above. Nothing herein, however, shall be construed as obligating the Participants to take or purchase any minimum quantity of water from Everett at any time except as Everett's rates require minimum payment related to each connection.

4. <u>Quality of Water</u>. Everett agrees that all water delivered to the Participants at the points of delivery shall be of the same standard and quality as that normally delivered by Everett to master meter customers east of the Snohomish River. Everett shall be responsible for meeting state and federal standards for safe, high-quality drinking water at the point of delivery. All water supplied by Everett for use or sale by the Participants shall be upon the express condition that after it has passed the point of deliver the same becomes the property of the Participants, and Everett shall not be liable for any damages or loss resulting from degradation of water quality which may occur beyond said point. Further, Everett shall not be responsible for changes in water quality or operating problems which may result from mixing of different sources of water in the Participants' systems. Participants shall provide means to assure that water will not backflow into the Everett system.

5. Rates and Charges. Rates shall be established by ordinance of the City of Everett. The charges for water service shall include a base rate, a minimum charge for each connection, and a filtration charge. The base rate for water and the minimum charge for each connection shall be established by ordinance of the City of Everett and shall be based on cost of service principles; provided that it is agreed that rates may include usual and accustomed charges imposed on the City utility by the City's general fund. The rate structure may include a minimum charge for each point of connection without regard to consumption plus a commodity charge. The Participants agree to read each of the master meters on a monthly basis and provide Everett with the readings by the 7th day of each month. Everett agrees that the Participants shall be served with notice of any future rate modifications that will impact the Participants at least thirty (30) days prior to consideration of said modifications by the Everett City Council.

In addition to the base rate for water, Participants agree to pay the ordinance filtration rate. If flow telemetry is installed on all of the Participants' connections, or mutually agreeable daily meter-readingsare arranged and the Participants' daily average of water consumption exceeds 3 MGD, the Participants may elect to pay the filtration charge in accordance with the following formula:

$$R = \frac{P}{X} \left(\frac{M + C + DS + O}{Q}\right)$$

R = Additional cost for filtered water computed to the nearest ten-thousandth of a dollar per 100 cubic feet.

M = Maintenance & Operation costs for Lake Chaplain filtration plant for preceding year.

C = Additional Capital Outlay costs attributable to filtration plant for preceding year.

DS = Annual debt service, exclusive of reserve interest income, if reserve funded from bond proceeds, attributable to total project costs for all past and future construction of Lake Chaplain filtration plant, including coverage.

O = Annual overhead attributable to filtration plant to be determined from previous years expense as follows:

O = 2% of filter plant material, supplies and utilities costs and 14% of labor costs at filter plant including fringe benefits.

$$P = \frac{\text{JOA Participants Maximum Daily Demand (day of highest Participant use in preceding year)}}{\text{JOA Participants Average Daily Demand (for preceding year)}}$$

Q = Quantity of water produced in previous year expressed in 100 cubic feet. (Filter Plant Meter Reading)

$$X = \frac{\text{System Maximum Daily Demand (day of highest system use in preceding year)}}{\text{System Average Daily Demand (for preceding year)}}$$

The filtration charge according to the above formula shall commence in April following one full calendar year (January through December) starting the January after the date of the Participants' election to pay by formula (formula date). Commencing on said formula date Everett agrees to establish a Participants' sinking fund made up of the bond coverage funds required for the Annual Debt Service (DS) for the Lake Chaplain filtration plant facilities. Bond coverage funds collected from the Participants under the Rate Formula (R) above shall be placed in this sinking fund and the principal and interest from investments of said funds shall be used for Additional Capital Outlay Costs (C) attributable to the filtration plant before other City funds are used thereby reducing the (C) value in the Rate Formula (R) by the amount used or if revenue bonds are required for future construction the amount of bonds required shall be reduced by the amount collected or remaining in the sinking fund including interest on investments at the time of issue of the bonds.

In the event the Sinking Fund exceeds One Million Dollars ($1,000,000) during the term of the bond issue(s), funds in excess of One Million Dollars ($1,000,000) shall be used to defray Maintenance & Operations (M) costs. At the expiration of the term of the bond issue(s) any balance remaining in the Sinking Fund shall be credited to Maintenance and Operations (M) until fully utilized.

6. Payments by Participants. On a monthly basis, Everett shall bill Marysville for water delivered through the Phase I JOA pipeline master meter and each Participant, directly, for water delivered through master meters at connection points which serve one Participant only. Bills for water delivered at future

connection points which serve more than one Participant shall be sent to an agency designated by the Participants. Said bills shall be payable within thirty (30) days after receipt of the invoice. Delinquent bills shall accrue interest at the rate of twelve percent (12%) per annum for any delinquency greater than sixty (60) days.

7. Resale or Distribution of Water by the Participants. After water has passed the points of delivery and has entered the PUD's system or Marysville's transmission pipeline, said water becomes the property of the Participants according to the point of delivery and/or their respective capacity right as established in the JOA and the use and distribution of the same shall be under the exclusive authority of the Participants, subject only to the following express limitations.

a. Ordinance No. 1347-87 (EMC 14.15.460) requires that new connections outside the City of Everett greater than 12 inches are subject to Everett Water System Plan modification. Participants agree not to allow any customer connection to Participants' water systems which is using water purchased from Everett if said connection is greater than 12 inches in diameter, or supplies more than one million gallons per day, unless Participants first obtain approval from Everett for said connection. Everett's approval shall not be unreasonably withheld and shall be based on the water supply impacts to the Everett water system caused by said connection.

b. The Participants will distribute water received from Everett in a manner consistent with the Everett Water System Plan, the CWSP, and the individual Participants' Water Systems Plans, as approved by the Washington State Department of Health if appropriate.

c. The Participants shall not serve water received from Everett, pursuant to the terms of this agreement, in areas outside the service area shown in Exhibit B attached hereto.

8. Term of Contract. The term of this Contract shall be from the date of its mutual acceptance by all parties until July 1, 2020, with provisions for amendment to incorporate Phase 2 facilities and demands to be consistent with the CWSP. The Participants shall have a right to renew this Contract for an extended term of similar duration and for a quantity of water consistent with the demands projected by the CWSP.

9. Construction, Operation and Maintenance of Capital Improvements. The Participants shall construct all capital

improvements to their water systems and shall own all capital improvements downstream from the points of delivery and shall assume exclusive responsibility for the operation, maintenance and repair of the same. All construction, operation, and maintenance and repairs shall be in strict compliance with standards approved by the Washington State Department of Health as appropriate. By separate agreement, the Participants may contract with Everett for certain inspection, repair and maintenance services relating to the 30-inch pipeline. The Participants shall annually provide to Everett a water system report to include number of customers, peak use and other information useful in optimizing joint operations.

10. Uncontrollable Forces. None of the parties hereto shall be considered to be in default in respect to any obligations hereunder if prevented from fulfilling such obligations by reason of uncontrollable forces. All parties rendered unable to fulfill any obligation hereunder by reason of an uncontrollable force shall exercise due diligence to deal with such uncontrollable force with all reasonable dispatch.

11. Assignment; Successors Bound. Neither this Contract nor any right or privilege herein shall be assigned by any party without the written consent of the other parties. This Contract shall apply to and be binding upon the lawful successors of all parties.

12. Notices. All notices complying with this Contract shall be sent by registered mail as follows:

To Everett

Mayor
City of Everett
Everett City Hall
3002 Wetmore Avenue
Everett, WA 98201

To the PUD

Manager
PUD No. 1 of Snohomish County

2320 California
Everett, WA 98201

To Marysville

Mayor
City of Marysville
Marysville City Hall
514 Delta Avenue
Marysville, WA 98270

To the Tribes

Executive Director
Tulalip Tribes of
Washington
6700 Totem Beach Road
Marysville, WA 98270

IN WITNESS WHEREOF, the parties have caused this Contract to be executed by their proper Officers on the 15th day of October, 1991.

CITY OF EVERETT

PETE KINCH, Mayor

ATTEST:

Sharon L. Marks, Deputy City Clerk
DONNA L. RIDER, City Clerk

APPROVED AS TO FORM:

BRUCE E. JONES, City Attorney

CITY OF MARYSVILLE

RITA MATHENY, Mayor

ATTEST:

PHILLIP E. DEXTER, City Clerk

APPROVED AS TO FORM:

GRANT WEED, City Attorney

PUBLIC UTILITY DISTRICT NO. 1
OF SNOHOMISH COUNTY

CHARLES N. EARL, District Manager

APPROVED AS TO FORM:

By:
Dated: 10/9/91

THE TULALIP TRIBES OF
WASHINGTON

STANLEY G. JONES SR., Chairman

ATTEST:

By: Marie M. Zackuse
MARIE M. ZACKUSE, Secretary

(0110)

EXHIBIT A

WATER REQUIREMENTS FORECAST FOR MARYSVILLE - LAKE STEVENS - TULALIP TRIBES SERVICE AREAS (1)

(Peak Day MGD)

SERVICE AREA	YEAR 2000	2010	2020	2040
Marysville (2)	9.71	11.66	13.68	17.72
Lake Stevens/PUD	0.75	3.42	5.93	10.96
Marysville/PUD Overlap (3)	1.04	1.49	2.05	3.17
Tulalip Tribes	3.11	4.09	5.34	6.39
TOTAL	14.61	20.66	27.00	38.24

Footnotes:

(1) Forecast as currently developed through the Coordinated Water System Plan.

(2) Demand forecast assumes current supply of 1.9 MGD from Edwards Springs and Lake Goodwin wells will serve other users.

(3) Demand to be assigned to utilities based upon final resolution of service area overlap.

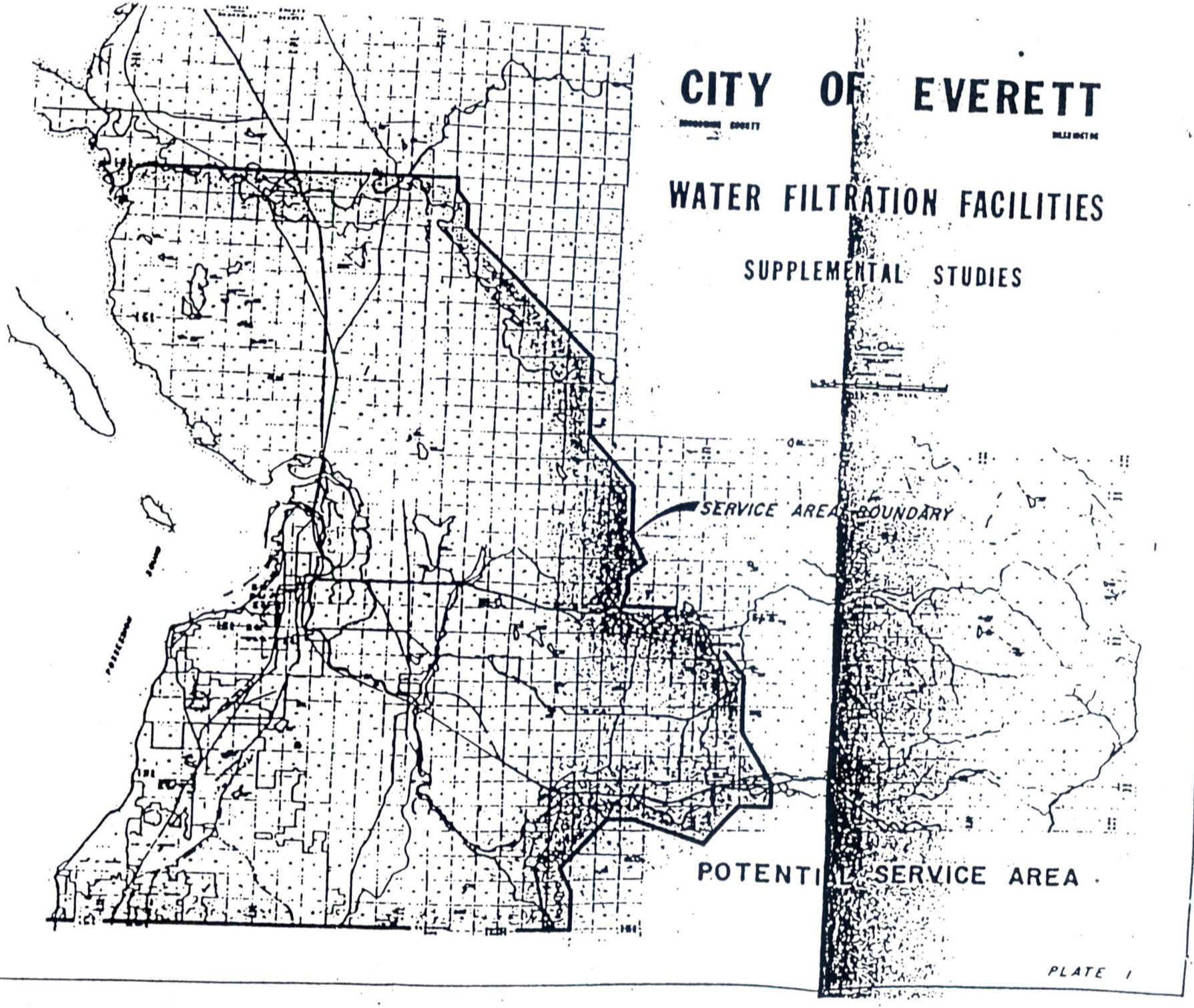
CITY OF EVERETT
WATER FILTRATION FACILITIES
SUPPLEMENTAL STUDIES
SERVICE AREA BOUNDARY
POTENTIAL SERVICE AREA
PLATE 1

EXHIBIT B

7/26/93

DEBT SERVICE AGREEMENT

THIS AGREEMENT is entered into by and between the City of Marysville, Washington, a municipal corporation ("City"), and The Tulalip Tribes of Washington, an Indian tribe organized pursuant to Section 16 of the Indian Reorganization Act of June 18, 1934 (25 USCA 476) ("Tribes"), as follows:

WHEREAS, on January 10, 1991 the City, Tribes and Public Utility District No. 1 of Snohomish County entered into the North Snohomish County Regional Water Supply Joint Operating Agreement (JOA); and

WHEREAS, the JOA provides that each participant shall be entitled to purchase capacity in the pipeline in proportion to the year 2010 peak day demand forecast; and

WHEREAS, the Tribes have elected to purchase their share of capacity in the water pipeline, said share being 19.80% of said capacity, or 4.09 MGD, peak day; and

WHEREAS, pursuant to the JOA, by letter dated November 25, 1992, the City sent notice to the Tribes of completion of the pipeline and provided a statement of construction costs, including the Tribes' cost share for their purchase of capacity in the pipeline; and

WHEREAS, pursuant to Resolution No. 93-110, the Board of Directors of the Tribes' authorized payment of their 1993 installment of the pipeline construction cost share; and

WHEREAS, on or about January 4, 1993, the Tribes tendered payment to the City in the sum of $129,035.42, representing payments of principal in the amount of $18,865.53 and accrued interest in the amount of $110,169.89 for 1991 and 1992; and

WHEREAS, pursuant to paragraph 5(C) of the JOA, the Tribes have elected to finance the purchase of their proportionate share of capacity and wish to purchase their capacity on the same general terms as the City's debt service for the construction of the pipeline project;

NOW, THEREFORE, the City and the Tribes agree as follows:

1. For and in consideration of its proportionate share of capacity in the City's 30-inch water pipeline, the Tribes agree to pay the City the remaining balance of $1,094,886.50 amortized over a period of nineteen (19) years pursuant to the terms of the Promissory Note attached hereto as **Exhibit A** and the Debt Service Schedule attached as **Exhibit B**, each of which is incorporated herein by this reference.

2. The Tribes guarantee all payments on the attached Promissory Note in a timely manner, and if any of said payments becomes delinquent, the Tribes agree to pay the same promptly upon demand according to the terms of said Note.

3. In order to secure the timely and proper payment of the Tribes' indebtedness, the Tribes agree to establish a cash reserve account in the amount of the average annual debt service as calculated pursuant to column 6 of **Exhibit B.**

4. As further security for the payment of the Tribes' obligation, at such time as water is wheeled to the Tribes as provided in the JOA, the City shall have, and the Tribes expressly consent to the City's right to cease and discontinue the wheeling of said water, if at any time the Tribes' payment on said Promissory Note becomes greater than sixty (60) days' delinquent. Provided, however, the City agrees to provide not less than twenty (20) calendar days' written notice to the Tribes of its intent to discontinue wheeling water to the Tribes.

5. Nothing contained in this agreement shall be deemed to amend the JOA and in the event any provision of this agreement shall conflict with the JOA, the JOA shall control. If any

provision of this agreement is adjudicated to be invalid, such action shall not affect the validity of the remaining portions of this agreement.

IN WITNESS WHEREOF, the City and the Tribes have caused this agreement to be executed by their proper officers on the 26th day of July, 1993.

CITY OF MARYSVILLE

By _____
DAVID A. WEISER, Mayor

Attest:

By _____
MARY SWENSON, City Clerk

Approved as to form:

By _____
GRANT K. WEED, City Attorney

THE TULALIP TRIBES

By _____
STANLEY G. JONES, SR.
Chairman

EXHIBIT A

PROMISSORY NOTE

US $1,094,886.50

June 1, 1993

FOR VALUE RECEIVED, the undersigned Tulalip Tribes of Washington ("Purchaser") promises to pay to the City of Marysville, a Washington municipal corporation, or order, the principal sum of ONE MILLION NINETY-FOUR THOUSAND EIGHT HUNDRED EIGHTY-SIX AND 50/100THS DOLLARS ($1,094,886.50), with interest on the unpaid principal balance from the date of this Note until paid at the per-annum rate as set forth on the debt service schedule attached hereto. Principal and interest shall be payable at 514 Delta Avenue, Marysville, Washington, or such other place as the Noteholder may designate, in consecutive biannual installments per the debt service schedule attached and incorporated herein, on the first day of June and the first day of December, beginning with the month of June, 1993. One-half of the interest shall be due on the first day of June, and the remaining interest plus principal due on the first day of December. Such installments shall continue until the entire indebtedness evidenced by this Note is fully paid, except that any remaining indebtedness, if not sooner paid, shall be due and payable on December 1, 2011.

Interest on the unpaid principal balance shall be computed on a daily basis to the day of Noteholder's receipt of each payment. Interest shall be deducted from each payment, and the balance of the payment applied in reduction of principal.

Purchaser shall pay to Noteholder a late charge of 5% of any installment not received by Noteholder within thirty (30) days after the installment is due.

Purchaser may prepay the principal amount outstanding in whole or in part. Any partial prepayment shall be applied against the principal amount outstanding and shall not postpone the due date of any subsequent installments or change the amount of such installments, unless Noteholder shall otherwise agree in writing.

Time is of the essence. If any installment under this Note is not paid when due and remains unpaid after a date specified by notice to Purchaser, the entire principal amount outstanding and accrued interest thereon shall at once become due and payable at the option of the Noteholder. The date specified shall not be less than 30 days from the date such notice is mailed. Noteholder may exercise this option to accelerate during any default by Purchaser regardless of any prior forbearance. If this Note is placed with an attorney for collection, Noteholder shall be entitled to collect all reasonable costs and expenses of

collection, including, but not limited to, reasonable attorney's fees and title search fees.

Presentment, notice of dishonor and protest are hereby waived by all makers, sureties, guarantors and endorsers hereof. This Note shall be the joint and several obligation of all makers, sureties, guarantors and endorsers and shall be binding upon them and their successors and assigns.

Any notice to Purchaser provided for in this Note shall be given by mailing such notice by certified mail addressed to Purchaser at the address stated below, or to such other address as Purchaser may designate by notice to Noteholder. Any notice to Noteholder shall be given by mailing such notice by certified mail, return receipt requested, to the Noteholder at the address stated in the first paragraph of this Note, or to such other address as may have been designated by notice to Purchaser.

TULALIP TRIBES OF WASHINGTON

By Stanley G. Jones Sr.
STANLEY G. JONES, SR., Chairman

Address: 6700 Totem Beach Road
Marysville WA 98271

TULALIP TRIBES
EVERETT - MARYSVILLE PIPELINE
DEBT SERVICE SCHEDULE

1	2	3	4	5	6	7
	INTEREST RATE	PERCENT PRINCIPAL MATURED (COL 4/COL 7)	PRINCIPAL PAYMENT (due 12/1)	TOTAL ANNUAL INTEREST PAYMENT (1/2 due 6/1) (1/2 due 12/1)	TOTAL DEBT SERVICE PAYMENTS (COL 4 + 5)	OUTSTANDING PRINCIPAL BALANCE
6/1/91						1,113,752.03
1991				35,054.06	35,054.06	1,113,752.03
1992	5.00	1.693871%	18,865.53	75,115.83	93,981.36	1,094,886.50
1993	5.25	1.848371%	20,237.56	74,172.56	94,410.12	1,074,648.94
1994	5.60	2.042771%	21,952.61	73,110.09	95,062.70	1,052,696.33
1995	5.80	2.280873%	24,010.67	71,880.74	95,891.41	1,028,685.66
1996	6.00	2.300767%	23,667.66	70,488.12	94,155.78	1,005,018.00
1997	6.15	2.730375%	27,440.76	69,068.06	96,508.83	977,577.24
1998	6.25	2.982456%	29,155.81	67,380.45	96,536.27	948,421.42
1999	6.35	3.508137%	33,271.93	65,558.22	98,830.14	915,149.50
2000	6.50	3.485757%	31,899.89	55,089.74	86,989.62	883,249.61
2001	6.60	4.621359%	40,818.14	61,371.96	102,190.09	842,431.47
2002	6.70	5.415309%	45,620.27	58,677.96	104,298.23	796,811.20
2003	6.80	6.328024%	50,422.40	55,621.40	106,043.81	746,388.79
2004	6.90	7.306985%	54,538.52	52,192.68	106,731.20	691,850.28
2005	7.00	8.279623%	57,282.60	48,429.52	105,712.12	634,567.68
2006	7.00	9.783784%	62,084.73	44,419.74	106,504.47	572,482.95
2007	7.00	18.154584%	103,931.90	40,073.81	144,005.70	468,551.05
2008	7.00	24.011713%	112,507.13	32,798.57	145,305.71	356,043.92
2009	7.00	33.526012%	119,367.33	24,923.07	144,290.40	236,676.59
2010	7.00	49.565217%	117,309.27	16,567.36	133,876.63	119,367.33
2011	7.00	100.000000%	119,367.33	8,355.71	127,723.04	0.00
			1,113,752.03		2,214,101.69	

EXHIBIT B

DEBT SERVICE PAYMENTS

1993 BY	1/24/93	129,035.42
	6/1/93	37,086.28
	12/1/93	57,323.04
1994	6/1/94	36,555.05
	12/1/94	58,507.65
1995	6/1/95	35,940.37
	12/1/95	59,951.04
1996	6/1/96	35,244.06
	12/1/96	58,911.72
1997	6/1/97	34,534.03
	12/1/97	61,974.79
1998	6/1/98	33,690.23
	12/1/98	62,846.03
1999	6/1/99	32,779.11
	12/1/99	66,051.04
2000	6/1/00	27,544.87
	12/1/00	59,444.76
2001	6/1/01	30,685.98
	12/1/01	71,504.12
2002	6/1/02	29,338.98
	12/1/02	74,959.25
2003	6/1/03	27,810.70
	12/1/03	78,233.10
2004	6/1/04	26,096.34
	12/1/04	80,634.86
2005	6/1/05	24,214.76
	12/1/05	81,497.36
2006	6/1/06	22,209.87
	12/1/06	84,294.60
2007	6/1/07	20,036.91
	12/1/07	123,968.80
2008	6/1/08	16,399.29
	12/1/08	128,906.41
2009	6/1/09	12,461.54
	12/1/09	131,828.86
2010	6/1/10	8,283.68
	12/1/10	125,592.95
2010	6/1/11	4,177.86
	12/1/11	123,545.18

9/5/95

1995

AGREEMENT BETWEEN

CITY OF MARYSVILLE AND THE TULALIP TRIBES

TO WHEEL WATER

IT IS HEREBY AGREED by and between the CITY OF MARYSVILLE, a municipal corporation of Snohomish County, Washington, hereinafter referred to as the "CITY," and the TULALIP TRIBES, hereinafter referred to as "TRIBES."

WHEREAS, the CITY and the TRIBES have a joint operating agreement (JOA) dated January 10, 1991, which envisions coordination in implementation of an adequate and safe water supply for North Snohomish County.

WHEREAS, the CITY hereby agrees to provide the following services to the TRIBES. Conveyance of water originating at the JOA pipeline through the City's existing distribution system and administration of payment to the City of Everett for water utilized through the JOA pipeline.

WHEREAS, it is proposed that a "Wheeling Charge" in accordance with Section 4E of the JOA be established which will fairly and reasonably compensate the City for conveying water through the City's existing water distribution system from the terminus of the Phase I JOA pipeline to the points of connection with the TRIBES as established by this agreement.

NOW, THEREFORE, IT IS AGREED as follows:

I

DEFINITIONS

As used in this Agreement, the following words and phrases shall have the meanings hereinafter set forth unless the context shall clearly indicate that another meaning is intended.

(1) The term "Transmission Main" shall mean that part of the supply system having a primary purpose of carrying a supply of water between the source and the distribution systems and has no direct service connections except by variance by the City Council to individuals or final users tapped into this main.

(2) The term "Service Connections" shall mean those separate connections between a distribution system main and the final consumer.

(3) The term "Distribution Main" shall mean any size water main which has service connections tapped directly to the water main supplying an individual or final consumer.

(4) The term "Distribution Facilities" shall mean that system of pipes and appurtenances used for receiving a supply of water and distributing it directly to the consumers or final users. For the purpose of this contract, it shall be further understood to mean that the "distribution facilities" are separate parts of a water system and as such are all operated and controlled by either the TRIBES or the CITY individually, but not jointly.

(5) The term "Service Meters" shall mean the meter or measuring device installed on a service line or service connection for the purpose of measuring the water service furnished to the final consumer.

(6) The term "Master Meter" shall mean the measuring device placed in the flow of a large main not being a service connection.

(7) The term "Everett and JOA Participants – Water Supply Contract" shall mean that a certain contract and agreement existing between the City of Everett and Joint Operating Agreement participants (specifically the City of Marysville, Public Utility District No. 1 of Snohomish County and the Tulalip Tribes of Washington) as relates to water supply and dated January 10, 1991, as it now exists and as it may be amended in the future.

(8) The term "Cubic Foot" shall mean a unit of measurement of flowing water equal to 7.48 gallons past a given point, usually a meter.

(9) The term "JOA Water Rates" shall include all applicable costs, including the Everett water cost, maintenance and operating costs allocated to the JOA pipeline, power costs, direct overhead costs of the City of Marysville Utility Department, and indirect city overhead costs, all divided by the quantity of water conveyed from Everett from the preceding year in 100 cubic feet increments.

(10) The term "Wheeling Charge" shall include all applicable costs, including Marysville system costs, direct overhead costs of the utility department, and indirect city overhead costs, all divided by the quantity of water metered in the system in 1,000-gallon increments. In addition, there will be a fixed charge levied on a periodic basis for costs associated with meter operation, maintenance, and calibration; meter reading; billing expense; and reports and collection.

(11) The term "Terminal Storage Reservoir" defines a storage reservoir used primarily to provide reserves against transmission failure from the supply, supply or pumping failure, and which permits a reduced sizing in the supply transmission and pumping system to the terminal storage reservoirs.

(12) The term "Peak Day Water" is the 24-hour average flow rate for any maximum usage day during a calendar year.

II

FUTURE FACILITY ACQUISITIONS

The TRIBES and the CITY agree that, at some future time it may be desirable for the CITY to extend its CWSP boundaries to include a part of the TRIBES service area, the "Distribution Facilities" used exclusively to serve such area may become the property of the CITY at the discretion of the TRIBES and the CITY shall pay to the TRIBES as follows:

If the TRIBES has or should construct additions or replacements to its "Distribution Facilities" in any area within its boundaries and said area becomes the service area of the CITY, the CITY shall pay the TRIBES upon acquiring these facilities the amount of money expended by the TRIBES from general TRIBES or Construction Funds, not covered by assessments for the construction of these improvements computed on a straight line depreciation formula. For these purposes, the depreciation rate for cast or ductile iron pipe shall be 100 years and for concrete cylinder, 3/16" shell or heavier steel pipe or reservoirs shall be 50 years. TRIBES records showing the original cost to be depreciated will be made available to the CITY for verification if and when desired by the CITY. Payment for the facilities acquired by the CITY shall be computed as herein specified but in no case shall it be less than that required under bond covenants for all outstanding revenue obligations of the TRIBES.

Upon City service in areas where facilities were installed under Local Improvement Districts or private plat developments, the CITY shall pay the TRIBES an amount equal to that required under the bond covenants for all outstanding revenue obligations of the TRIBES before acquisition from the TRIBES.

When the CITY serves a future area of the TRIBES's service area, the CITY shall pay for the improvements installed by the TRIBES as outlined above within 180 days from the date of service. Upon final payment, conveyance of said improvements shall be made by issuance of a Bill of Sale by the TRIBES to the CITY.

It is further understood and agreed by the TRIBES and CITY that these provisions with respect to the acquisition of facilities owned by the TRIBES do not apply to existing "Transmission Mains" or appurtenances or those which may be constructed and provided by the TRIBES for the single purpose of supplying water to distribution systems operated independently by the TRIBES or any legally constituted municipality owned and operated distribution system supplied by the TRIBES.

III

DEDICATED TRIBAL WATER LINE

Should the TRIBES be required or elect to install and maintain a water transmission line or lines within the CITY corporate limits to supply water to the TRIBES' service and/or storage area, the TRIBES agree to apply for, and the CITY agrees to grant, subject to all CITY rules, policies, regulations and ordinances, necessary permits, franchises and rights-of-way to the TRIBES as reasonably required provided further that the TRIBES shall pay for all acquisition of rights-of-way required to be obtained on other than public streets and public properties of the CITY. All necessary permits and/or franchise fees required shall be paid by the TRIBES. The TRIBES agrees to construct along the rights-of-way covered by the leases, permits, and franchises by the CITY's Public Works Department and permitted by the CITY's codes and ordinances. The TRIBES agrees to maintain all the facilities constructed by it within the corporate limits of the CITY in good working order and will save harmless the CITY from any and all claims for damages to property or persons resulting from its failure to comply with this agreement or from acts of omissions by its agents.

IV

POINTS OF CONNECTION

The CITY agrees to deliver peak day water needed by the TRIBES at the agreed connection points on the regional supply main within the CITY's existing distribution facilities at rates as hereinafter set forth, subject to limits of the "Everett and JOA Participant – Water Supply Contract." Said agreed connection points and peak day water volumes include:

- Single point of connection at 88th Street N.E. with a peak day water demand of 210 gallons per minute.

- Single point of connection at Marine Drive with a peak day water demand of 440 gallons per minute.

- Simultaneous delivery at two points of connection at Marine Drive and 88th Street N.E. with a peak day water demand of 366 gallons per minute and 176 gallons per minute, respectively, for a total of 542 gallons per minute; and an average day water demand of 473 gallons per minute and 240 gallons per minute, respectively, for a total of 713 gallons per minute.

The actual point of delivery at each connection point shall be the upstream flange of the valve downstream of each "Master Meter" and check valve. If the CITY's supply is limited by Everett, the TRIBES' supply will be limited in the same proportion as the entire CITY will be limited. The TRIBES may be delivered water at other points in the CITY's system; however, the amount of water available is limited. The TRIBES may improve the distribution system to increase flow with permission of the CITY.

The agreement to supply water by the CITY to the TRIBES shall be subject to and limited by unavoidable accidents, acts of God, and any conditions beyond the control of the CITY. If the CITY declares an emergency on limited water available through accident, catastrophe, or limitations by Everett by contract or its own emergency and notifies the TRIBES of the limitations imposed by the CITY, the TRIBES shall comply with those limitations or be subject to the CITY's controlling delivery of water at the "Master Meters" during that emergency. The CITY will treat any major interruption to the supply to the TRIBES as an urgent matter and will attempt to restore or cause to be restored normal service to the TRIBES as expeditiously as possible. As such, the TRIBES agrees to save and hold harmless the CITY, its officers, agents, and employees, from and against any and all liabilities, claims, actions, or damages by the TRIBES and customers thereof relating to or arising out of unavoidable accidents, acts of God, catastrophe, limitations by Everett either through contract or its own emergency, and any and all other conditions beyond the control of the CITY. Any and all claims arising out of such circumstances by customers of the TRIBES shall be referred directly to the TRIBES and it shall review, adjust, and/or defend said claims at its own expenses, as appropriate.

The quantity of water delivered shall be measured by the "Master Meters" referred to in Section VI herein. Nothing herein, however, should be construed as obligating the TRIBES to take or purchase any minimum quantity of water from the CITY at any time.

V

STORAGE DEFICIENCY DEMAND CHARGE

The CITY shall implement a demand charge based on the TRIBES' deficient water storage or control thereof and the equivalent cost to provide storage, when the instantaneous flow rate for the sum of all supply points exceeds 4.09 million gallons per day as determined by the 15-minute peak instantaneous flow rate, and such demand charge shall be applied only if the average demand factor exceeds 1.3 as outlined in the following paragraphs.

Such demands charge and method of application thereof shall be as follows:

(1) The policy of the CITY is to supply "Peak Day Water" to the TRIBES at the 24-hour average flow rate. The TRIBES shall provide or pay for storage for peaking rates above such average flow rate as described herein.

(2) A demand charge will be applicable to the TRIBES when it is found to have deficient storage as determined in the following paragraphs.

(3) The "Master Meter" or meters to the TRIBES will be monitored by the CITY to determine applicability of the demand charge. Demand metering equipment telemetered to the CITY's Public Works Department will be installed on "Master Meters" at the TRIBES expense and maintained by the CITY.

(4) A day for purposes of the schedule commences at 9:00 a.m. and ends at 9:00 a.m. the following calendar day.

(5) The demand factor for each "Master Meter" service is the peak flow rate as defined in subparagraph 13 of this section divided by the 24-hour average flow rate of the same day as shown on the telemetered chart in the CITY's Public Works Department for each "Master Meter."

(6) The 10 maximum flow days each year for each "Master Meter" service will be used to determine the average demand factor from which storage deficiency will be calculated. (Such, 10 maximum flow days need not necessarily be consecutive.) The average demand factor is the average of the demand factors of the 10 maximum flow days for each "Master Meter" service each year.

(7) A demand charge for each "Master Meter" service shall be applied only when the average factor for that meter exceed 1.3.

(8) The deficient storage volume of each "Master Meter" service for charge calculation rate shall be $S=0.22\ (F-1.0)\ Q$: Where S = storage deficiency in gallons. F = average demand factor and Q = average daily quantity of water in gallons used in the 10 maximum flow days for each "Master Meter" for each year.

(9) The demand charge shall be calculated by applying a storage deficiency rate per month per thousand gallons of deficient storage. The base rate beginning in 1995 is $5.50 per month per thousand gallons based on an Engineering News Record Index of Construction Costs for 20 cities of 5,432.08. The rate in subsequent years will be adjusted based upon the ratio of the current ENR index in January of the year in which the demand charge is applied to 5,432.08.

(10) The demand charge will be calculated by the first of November of each year after evaluation of the summer months (June, July, and August) water delivery flow rates. The monthly storage deficiency demand charge billing shall commence in January of the year following the instantaneous flow rate exceeding 4.09 million gallons per day and the demand factor exceeding 1.3 and continue for one calendar year until the following January at which time a new charge, if any, shall be applied.

(11) Peak flow caused by accidents in the TRIBES' water system will be excluded in determining the demand charge. Documentation shall be provided by the TRIBE to the Public Works Director of the CITY within 30 days after an accident.

(12) Artificially created flow rates shall be disallowed in calculating the demand charge, such as a catastrophe causing fires or water line ruptures and electrical storms interfering with the telemetering signals.

(13) The peak flow rate under paragraph (5) above shall be the average of not less than a 15-minute peak rate as shown on the telemetered chart.

VI

MASTER METER

All water supply delivered by the CITY to the TRIBES through the permanent supply points at Marine Drive and 88th Street N.E. shall be measured through the "Master Meter." Said "Master Meter" shall include telemetry of flow data and any necessary control functions and shall meet all specifications and approval of the CITY. All costs of installation, maintenance, repair, and replacement thereof shall be borne by the TRIBES. The "Master Meter" and facilities to the downstream face of the meter vault shall be owned by the City of Marysville.

Access to the meter and the flow records shall be made available to the CITY at all times. The CITY shall maintain, repair, and replace the remote control recording equipment at the meter at TRIBES expense. The meter shall be checked by the CITY for accuracy on an annual basis as part of normal maintenance. However, either party to this agreement may, at its option, request or cause to be tested the main line meter for accuracy at any other time between the annual checks. All tests shall be conducted in a manner agreeable to both parties and the costs of the testing other than the annual check shall be borne in the following manner: If both parties agree to the test, then costs will be shared equally. If either of the parties singularly requests the test, then the cost shall be borne by the party causing the test to be performed providing the test indicates the meter to be performing within 2% of the degree of accuracy guaranteed by the manufacturer of the equipment. In the event the meter is not performing within the allowable limits (2% of the manufacturer's guaranteed accuracy) then the party benefiting as a result of the malfunction shall bear the cost of the test that the meter is not functioning within the herein agreed tolerance, then an adjustment in charges for water supply shall be determined as follows:

The meter error percentage determined from the test shall be used to adjust recorded deliveries and shall apply for a period of time being one-half the time between the last satisfactory test and the test at which the malfunction was determined, plus all of the time between discovery of the error and completion of repairs or adjustment of the meter. Either a credit or additional billing at the rates hereinafter provided for water supply shall accrue to the appropriate party. The "Master Meter" installation shall include a blank meter case with cover plate for testing meter immediately downstream of the "Master Meter" at Marine Drive and 88th Street N.E. with appropriate valving and bypass around said meter and meter case to facilitate testing of meter. The CITY will provide and insert test meter for accuracy certification of "Master Meter." A strainer immediately upstream of "Master Meter." will be included as part of the "Master Meter" installation.

The CITY shall construct, purchase, and install a new "Master Meter" facility meeting all CITY specifications at each connection point and at such other locations as mutually agreed between the parties. Within thirty (30) days of the construction, purchase, and installation of

such meter facility, the TRIBES shall reimburse the CITY for all expenses associated with the metering facility. Said meters shall be installed in an adequately drained vault separate from pressure-reducing equipment. The CITY shall operate, maintain, repair, and test the "Master Meters" and may bill the TRIBES for the cost of such services in the month following the month in which the costs are incurred. The CITY shall provide documentation of all maintenance, repairs, and testing to the TRIBES, along with its billing for such services.

Should the test meter record a higher consumption than the master meter, consumption will be adjusted to the test meter as aforementioned. Consumption will continue to be based upon an adjustment to the test meter unless the master meter is recalibrated.

VII

WATER QUALITY

The CITY will make every reasonable effort to deliver a quality of water to the TRIBES equal to the quality delivered to the CITY by the City of Everett under Section 4G of the "Everett and JOA Participants Water Supply Contract," and the CITY makes no other promise, representation, or warranty regarding the quality of water delivered to the TRIBES. In the event sources of other water, such as from the CITY's well system are available and the CITY determines in its discretion to supply such water, and the TRIBES agrees to accept such water, the quality of such water shall be "well water" and the CITY shall not be required to treat, filter, or otherwise modify the water provided by such other supplies.

The TRIBES shall provide means, at its own expense, to assure that water will not backflow into the CITY system. The CITY further agrees that it will continue to cooperate on an ongoing basis with the City of Everett to pursue compliance with the Federal Safe Drinking Water Act – Public Law 93-523.

VIII

WATER RATE

The City will be compensated for City of Everett water utilized through the JOA pipeline defined as "JOA Water Rate" and through a "wheeling charge" for water transmittal through the City's existing water distribution system." The cost to the TRIBES shall be the sum of the "Wheeling Charge" plus the "JOA Water Rate." The cost to the Tribes shall be adjusted yearly on December 31st based upon costs and water quantities established one year prior to the effective date (e.g., December 31, 1995, adjusted cost based upon 1994 costs and water quantities).

The rate to be paid by the TRIBES to the CITY for water shall be based on the sum of the "JOA Water Rate" plus the "Wheeling Charge" computed from the following formulas:

1. "JOA Water Rates" at termination of JOA pipelines – storage needs provided by each purveyor.

$$R = E + \frac{(P + M)(1.0 + OH) + 1.25DS + TD}{QE}$$

R	=	JOA water rate (per 100 cf)
E	=	Everett cost (per 100 cf)
P	=	Power cost for preceding year
M	=	Maintenance and operating cost for preceding year allocated to pipeline
OH	=	Water utility overhead rate
DS	=	Future debt service
TD	=	Transmission Depreciation
QE	=	Quantity of water conveyed from Everett for preceding year in 100 cf

2. "Wheeling Charge" to JOA participants for water furnished through the Marysville distribution system from any source. Storage needs provided by each purveyor.

$$W = \frac{(MV)(1.0 + OH)}{QM} + C$$

W	=	Wheeling Charge (per 1,000 gallons)
MV	=	Marysville system costs (per 1,000 gallons)
OH	=	Water utility overhead rate
QM	=	Quantity of water metered into the system exclusively for Marysville and the Tribes from all sources, including water metered at JOA pipeline (per 1,000 gallons)
C	=	Customer costs associated with meter maintenance, operation and replacement, meter reading, billing expense, and reports and collection

3. Total cost to TRIBES will be "Wheeling Charge" and "JOA Water Rates."

4. Rate Component Descriptions.

<u>Everett Cost = E</u>:

The Everett Water Cost shall be the then current water charges paid by the CITY as determined by the "Everett and JOA Participants – Water Supply Contract" and any additional charges as agreed to in the future between the City of Everett and the CITY of Marysville or as determined by law. The rate shall continue to be computed to the nearest ten thousandth of a dollar.

Power Cost = P:

Power cost shall include all electrical and heating charges at the CITY's existing water supply facilities, such as, standby wells, reservoirs, and the meter pits for the preceding year and such other wholesale facilities as may be constructed by the CITY.

Maintenance and Operations Cost = M:

Maintenance and Operation Costs shall include all repairs of pumps, motors, and heaters at the standby wells serving the wholesale customers, telemetering repairs or additions, all labor costs for above and daily maintenance and operation of standby wells, transmission and distribution system maintenance, telemetering, "Master Meter" readings, and other maintenance and operation costs attributable to either "JOA Water Rate" or "Wheeling Charge" and the equipment necessary to perform said work.

JOA Transmission Depreciation = TD:

Is defined as the total cost including but not limited to material, labor, engineering, sales tax, legal, administration, etc. of various segments of the JOA transmission line divided by the useful life. For this purpose, the depreciation rate for cast or ductile iron pipe shall be 100 years and for concrete cylinder, PVC, 3/16-inch shell or heavier steel pipe shall be 50 years. City records showing the original or estimated cost to be depreciated will be made available to the Tribes for verification if and when desired by the Tribes.

Depreciation shall continue until the useful life of the facility, defined above, is reached. At such time it is assumed a replacement facility will be constructed. The cost of the replacement facility will be borne by the City of Marysville. At the time the facility is replaced, the depreciation cost to the Tribes will be revised to reflect the replacement costs.

Marysville System Costs = MV:

The following is a breakdown of system costs by expense item for JOA participants using the Marysville distribution system:

i) Supply – Supply meters other than JOA pipeline.

ii) Pumping and Treatment Costs

- Operation of equipment
- Power
- Supplies
- Maintenance of structures
- Maintenance of equipment

iii) Transmission and Distribution Costs:

- Outside engineering
- Trans. and disr. line expense
- Supplies, excluding meters
- Other operating expenses
- Maintenance of structures and improvements
- Maintenance of mains
- Maintenance of miscellaneous plant, excluding storage, meters, and hydrants

iv) Wheeling Charge Depreciation:

Depreciation will include distribution pipelines associated with wheeling water from the JOA pipeline to the points of connection with the Tulalip Tribes. For this purpose, the depreciation rate for cast or ductile iron pipe shall be 100 years and for concrete cylinder, 3/16-inch shell or heavier steel pipe shall be 50 years. City records showing the original or estimated cost to be depreciated will be made available to the Tribes for verification if and when desired by the Tribes.

Depreciation shall continue until the useful life of the facilities, defined above, is reached. At such time it is assumed that replacement facility(ies) will be constructed. The cost of the replacement facility(ies) will be borne by the City of Marysville. At the time portions of the distribution system are replaced, the depreciation cost to the Tribes will be revised to reflect the replacement costs.

Water Utility Overhead Rate = OH:

The formula for determining the overhead reate is attached as Exhibit B and includes the following components.

- General and specific overhead direct and indirect associated with water service excluding meter reading and billing cost
- Professional services
- Insurance
- Taxes and assessments: It is understood that the Tribes are not subject to the same taxes as the City. At the Tribes' option and expense they may seek to have its portion of such taxes exempted from payment by the City, in which case the credit would be passed on to the Tribes. Written proof of such exemption shall be provided to the City reflecting such tax exemption, if any.
- Transmission and distribution supervision

Future Debt Service = DS:

Future debt service shall include bonded debt service required for any future pumping, or distribution lines as may be required. Cost will be included in the appropriate formula added to this agreement at the second billing period to the TRIBES after sale of bonds issued for construction of the above future facilities. In the event the CITY elects to finance any future facilities out of CITY general construction funds, then such total costs will be added to this agreement by the second billing period of the following year and paid for under maintenance and operation costs.

The CITY bond covenants require a bond coverage of 1.25 times the Debt Service which is incorporated in the rate formula. The CITY policy is to use any coverage money not required for the bond reserve fund, refunding of bonds, or the retirement of bonds for JOA pipeline improvements to the extent possible.

It is understood that debt service is an alternative to depreciation in the formula. With both parties' concurrence, a facility(ies) can be exempt from depreciation charge if future replacement or repair is anticipated to be financed through issuing bonds. Whereby the annual cost for facility replacement would be included as debt service. Specific facilities that were exempt from depreciation would be attached as an addendum to this agreement.

(5) Initial Water Rates:

The initial water rate to the TRIBES shall be 0.5539 cents per 100 cubic feet for "JOA Water Rate," 0.24 cents per 1,000 gallons for "Wheeling Charge," and a flat rate of $250 per month for customer fixed costs associated with meter maintenance, operation, replacement, reading, billing expense, reports, and collection. Such rates will be effective the following month after date of execution of this agreement and actual connection to the City's distribution system; and billings to the TRIBES for water consumed after this date shall be computed at this rate through December 31, 1996.

IX

NOTICE OF NEGOTIATION

A thirty (30) day advance notice of negotiation with the City of Everett for any future rate change or any other change to the Everett and JOA Participants Water Supply Contract which may impact the TRIBES shall be given to the TRIBES by written notice, and the TRIBES shall have the right to be present at such meetings.

X

BILLING AND PAYMENT

The period of billing for water supplied under this agreement shall be on regular monthly intervals.

The "Master Meter" shall be read and recorded near the last normal workday of the month in which the service was furnished. Billing to the TRIBES will be made by the 10th day of the month following, and payment to the CITY becomes due by the 30th day of the month in which the statement is received. If any payment or portion thereof due to the CITY shall remain unpaid for 15 days following its due date, the TRIBES shall be charged with and pay to the CITY interest on the amount unpaid from its due date until paid at the rate of 12% per annum. In the event the CITY is required to collect any delinquent fees, rates, costs, or billings which become past due, both parties stipulate and consent to both venue and jurisdiction of the Snohomish County Superior Court. The substantially prevailing party in such action shall be entitled to its cost and reasonable attorney fees from the other party.

XI

TERM AND EXPIRATION

(1) The term of this contract shall be from the date of its mutual acceptance by all parties until July 1, 2020, plus such extensions as may be mutually agreed upon.

XII

DISPUTE RESOLUTION

The parties desire to avoid and settle without litigation future disputes which may arise between them relative to this agreement. Accordingly, the parties agree to engage in good faith negotiations to resolve any such dispute. In the event they are unable to resolve any such dispute by negotiation, then such dispute concerning any claim arising out of or relating to this agreement or the performance or interpretation thereof shall be submitted to arbitration in accordance with the arbitration rules of the American Arbitration Association (hereinafter "Rules") then in effect, and the award rendered by the arbitrator shall be binding as between the parties. The judgment on such award may be entered in any court having jurisdiction thereof.

The written demand for arbitration shall contain a statement of the question to be arbitrated and the name of the independent arbitrator appointed by that party. The other party to this agreement shall, within ten (10) days of the receipt of the written demand, appoint an independent arbitrator and give notice in writing thereof to the party who commenced arbitration. A third independent arbitrator shall be appointed by requesting a list of five (5) arbitrators from the American Arbitration Association. The selection of the third independent arbitrator shall be

made by each party to this agreement taking turns striking names from said list until one such name shall remain. A coin shall be tossed to determine which party strikes the first name. The arbitrator selected from the list, hereafter "independent arbitrator", shall select a time, date, and place for hearing, and shall give each party not less than thirty (30) days' notice in writing thereof.

The parties agree that after any such demand for arbitration has been made, they shall, before the hearing thereof, make discovery and disclosure of all matters relevant to such dispute, to the extent and in the manner provided by the Federal Rules of Civil Procedure. All questions that may arise with respect to the obligation of discovery and disclosure and the protection of the disclosed and discovered materials shall be referred to the independent arbitrator. A stenographic record shall be made of any arbitration hearing.

The parties shall share the cost of arbitration.

This agreement shall be construed, and the legal relations between the parties hereto, shall be determined in accordance with the substantive law of the State of Washington.

The substantially prevailing party in any arbitration action or action to enforce judgment or any appeal thereof shall be entitled to all costs and its reasonable attorney fees.

XIII

WAIVER, ASSIGNMENT, NOTICES, AND ENTIRETY

(1) Waiver: No waiver by either party hereto of any terms or conditions of this agreement shall be deemed or construed to be a waiver of any other term or condition, nor shall the waiver of any breach be deemed to construed to constitute a waiver of any subsequent breach, whether of the same or any other term or condition of this agreement.

(2) Assignment: Except where one of the parties merges or combines with another entity, neither this agreement nor any of the rights, interest, or obligations created hereunder may be assigned by either party without the written consent of the other party. This agreement shall be binding upon and inure to the benefit of the respective customers and assigns of the parties.

(3) Notices: Notices required or permitted to be given hereunder shall become effective upon being deposited as registered or certified mail in a United States Post Office, addressed as follows:

To The Tulalip Tribes:

Chairman, Board of Directors
The Tulalip Tribes
6700 Totem Beach Road
Marysville, WA 98271-9715

To The City:

Honorable Mayor
City of Marysville
Marysville City Hall
514 Delta Avenue
Marysville, WA 98270

or to such other address as may be substituted in writing by the addressee.

(4) Entirety: Except as provided the Settlement and Compromise Agreement between the parties dated April 25, 1983 which shall remain in full force and effect, unchanged, and except as provided in the JOA between the parties, all prior negotiations and agreements between the parties hereto relating to the subject matter hereof are merged into and superseded by this agreement, and shall constitute the entire agreement between the Tribes and the City concerning the sale of water to the Tribes for the use as hereinbefore provided.

DATED this 5th day of September, 1995

TULALIP TRIBES

By: Stanley G. Jones Sr.
Title

(Seal)

Attest: Chairman
Title

CITY OF MARYSVILLE

By: David Weiser
Mayor

(Seal)

Attest: Mary E. Swenson
City Clerk

Interlocal file

6/23/03

2003

AGREEMENT BETWEEN

CITY OF MARYSVILLE
AND
PUBLIC UTILITY DISTRICT NO. 1 OF SNOHOMISH COUNTY (PUD)

FOR WATER SUPPLY

THIS AGREEMENT IS ENTERED into by and between the CITY OF MARYSVILLE, a municipal corporation of Snohomish County, Washington, hereinafter referred to as the "City," and PUBLIC UTILITY DISTRICT NO. 1 OF SNOHOMISH COUNTY, hereinafter referred to as "PUD," and is effective upon execution by both parties.

WHEREAS, the City and the PUD are participants in a joint operating agreement (JOA) dated January 10, 1991, which envisions coordination in the implementation of an adequate and safe water supply for the City and North Snohomish County, Washington; and

WHEREAS, the PUD and the City each own capacity rights in and utilize for their respective water utility purposes a 30-inch pipeline (the "JOA-I Pipeline" or "Pipeline") which was built by the City pursuant to the JOA; and

WHEREAS, the City owns, operates and maintains the JOA-I Pipeline and the PUD has agreed to compensate the City for the PUD's share of Pipeline operation and maintenance costs; and

WHEREAS, the City agrees to make City of Everett water available to the PUD at points along the JOA-I Pipeline based on the PUD's "assigned capacity share" in the Pipeline, in accordance with the JOA; and

WHEREAS, it is proposed that a charge be established which will fairly and reasonably compensate the City for operation and maintenance costs associated with making water supply from Everett available to the PUD through the JOA-I Pipeline to the point of connection with the PUD as established in this Agreement.

NOW, THEREFORE, IT IS AGREED as follows:

I

DEFINITIONS

As used in this Agreement, the following words and phrases shall have the meanings hereinafter set forth unless the context shall clearly indicate that another meaning is intended.

(1) The term "Transmission Main" shall mean that part of the water supply system having as its primary purpose carrying a supply of water between the Everett source of supply and either Party's respective water distribution facilities.

(2) The term "Service Connections" shall mean those separate connections between a distribution system main and the final consumer.

(3) The term "Distribution Main" shall mean any size water main which has service connections tapped directly to the water main and having as its primary purpose supplying an individual or final consumer. Unless the parties expressly agree otherwise, however, this term shall not include a transmission main with incidental retail customer service connections.

(4) The term "Distribution Facilities" shall mean that system of pipes and appurtenances, including but not limited to distribution mains, used primarily for receiving a supply of water from a transmission main and distributing such water directly to the consumers or final users. For the purpose of this contract, it shall be understood that "distribution facilities" are separate parts of a discrete water system and as such are all respectively owned, operated, and controlled by either the PUD or the City individually, but not jointly.

(5) The term "Everett Wholesale Rate - PUD" shall mean the cost, in dollars per 100 cubic feet , which is charged by the City of Everett for water received by the PUD through the JOA-I Pipeline. Such rate may be based in part upon the PUD's peaking factor.

(6) For the purpose of this Agreement, the term "JOA-I Pipeline" is that portion of the existing Everett - Marysville water transmission line beginning at approximately Hewitt Avenue at 87th Avenue SE and extending northerly to the intersection of 44th Street NE and 83rd Avenue NE.

(7) The term "Master Meter" shall mean the measuring device placed in the flow of a large main not being a service connection.

(8) The term "Everett and JOA Participants – Water Supply Contract" shall mean that certain agreement, dated January 10, 1991, between the City of Everett and Joint Operating Agreement participants (specifically the City of Marysville, Public Utility District No. 1 of Snohomish County and the Tulalip Tribes of Washington) as it now exists and as it may be amended in the future.

(9) The term "Peak Day Water" is the 24-hour average flow rate for the maximum usage day during a calendar year.

II

ANNEXATION OF AREAS SERVED BY PUD – AND PUD FACILITY ACQUISITIONS BY THE CITY

A. At such time as the City extends its corporate boundaries to include areas within that "overlap area" described in Exhibit 1, attached hereto and incorporated herein by this reference, any applicable service area and any part(s) of the PUD's "Distribution Facilities" used to serve PUD water utility customers within such areas, upon the written request of the City, shall to the extent and in the manner provided by law, be conveyed by the PUD to the City. Provided, that in adjusting their water system boundaries within the "overlap area" pursuant to the previous sentence, the parties shall endeavor to make such adjustments in a reasonable manner which takes into account each party's respective water system hydraulics and prudent engineering and water system operating practices. Provided further, that in no event shall the PUD's capacity share be modified or reduced by any or all annexations by the City to less than 16.55% of JOA-I Pipeline capacity or 3.42 million gallons per day (MGD), whichever is greater. The purchase price to be paid by the CITY for facilities subject to such conveyance shall be based upon the annexed customers' pro-rated share of the PUD's outstanding water system bonded indebtedness, including any bonded indebtedness related to the JOA-I Pipeline, as determined by the revenues derived by the PUD from the annexed customers compared to the total rate revenues of the PUD water system.

B. It is understood and agreed by the PUD and the City that conveyance of utilities under this section shall not include transmission main or other facilities, including facilities defined in this Agreement as "distribution facilities" which are reasonably required by the PUD to serve its customers outside the conveyed service area, until such time as all of those areas served by the facilities have been annexed by the City. The facilities as shall be conveyed hereunder are, from the time of conveyance, sold and purchased "as is" and shall become the sole responsibility of the City; Provided, that until the time of conveyance, the PUD shall continue to operate and maintain such facilities in accordance with its usual and customary utility practices. At the time of conveyance of facilites to the City, the PUD shall transfer copies of "as-builts" and other records describing such facilities as are in the possession of the PUD.

C. With regard to facilities conveyed to the City under this section, the City shall become responsible for administering any applicable unexpired PUD latecomer agreements; and the PUD shall assign to the City such latecomer agreements and provide applicable records related thereto.

D. The City and PUD agree that neither shall serve any customer within the other party's service area without the prior express written consent of the other party.

III

POINTS OF CONNECTION, PIPELINE CAPACITY, PUD CAPACITY SHARE, AND LIMITATION OF LIABILITY

A. The City agrees to make available peak day water desired by the PUD at the agreed connection point on the JOA-I Pipeline for an operation and maintenance charge as hereinafter set forth, subject to limits of the "Everett and JOA Participants – Water Supply Contract." The currently agreed connection point is:

Soper Hill Road (28th Street N.E.) and 83rd Avenue N.E.

The actual point of delivery at the connection point shall be the downstream flange of the valve upstream of each "Master Meter" and check valve. If the JOA-I Pipeline supply is limited by Everett, the PUD's Everett supply will be limited in the same proportion as each Party's capacity allocation in the JOA. Additional points of connection may be authorized by letter agreement between the Parties, subject to all other provisions of this Agreement.

The Parties stipulate and agree that the PUD's "assigned capacity share" in the JOA-I Pipeline is 16.55% or 3.42 MGD, whichever is greater. The respective JOA-I Pipeline capacity shares of the parties hereto is described in Exhibit 2, attached hereto and incorporated herein by this reference.

At the time of execution of the JOA, the parties to such agreement reserved 7.21% of the JOA-I Pipeline capacity for service to the "overlap area" described in Exhibit 1. The PUD has agreed to relinquish, to the City, any and all right the PUD may have in the pipeline capacity reserved for the "overlap area." Notwithstanding such relinquishment of pipeline capacity, the PUD agrees to continue to serve its customers within the "overlap area" until annexed by the City.

Further, the Parties stipulate and agree that the PUD has paid to the City the sum of $1,018,357.52 for its assigned capacity share of JOA-I Pipeline capacity, a sum which represents full compensation for such share.

B. This Agreement by the City to make water supply available to the PUD shall be subject to and limited by unavoidable accidents, acts of God, and any conditions beyond the reasonable control of the City. The City will treat any major interruption to the supply to the PUD as an urgent matter and will attempt to restore or cause to be restored normal service to the PUD as expeditiously as reasonably possible. Accordingly, the PUD agrees to save and hold harmless the City, its officers, agents, elected officials, and employees, from and against any and all liabilities, claims, actions, or damages (including costs of defense and reasonable attorneys fees) by the PUD and customers thereof relating to or arising out of unavoidable accidents, acts of God, catastrophe, limitations by Everett either through contract or its own emergency, and any and all other conditions beyond the reasonable control of the City. Any and all claims arising out of such circumstances by customers of the PUD shall be referred directly to the PUD and it shall review, adjust, and/or defend said claims at its own expense, as appropriate.

C. The quantity of water made available shall be measured by the "Master Meter" referred to in Section IV herein. Nothing herein, however, should be construed as obligating the PUD to take any minimum quantity of water through the Pipeline at any time.

D. The PUD may desire, at a future date, to connect to the City system beyond the JOA-I Pipeline. The City agrees that such future connections may be allowed, subject to a letter of agreement between the parties prior to the time of connection.

IV

MASTER METER AND TESTING

A. All water supply delivered by the City to the PUD through the supply point at the intersection of Soper Hill Road and 83rd Avenue N.E. shall be measured through the "Master Meter." Said "Master Meter" shall include telemetry of flow data and any necessary control functions and shall meet all specifications and approval of the City. All installation, maintenance, repair, and replacement of the Master Meter shall be by the PUD, at its own cost. Provided, however, that prior to any maintenance, repair or replacement of the Master Meter, the PUD shall give at least 24 hours written notice to the City Director of Public Works. Provided, further that such notice need not be given in the case of routine maintenance or a bona fide emergency.

B. Access to all meters and the flow records shall be made available to the City at all times. The PUD, at its own cost, shall maintain, repair, and replace its own remote control recording and other telemetry equipment controlling and monitoring water supply through the "Master Meter." The City shall maintain all equipment used by it to monitor the PUD's remote control and recording equipment. All meters shall be checked by the PUD for accuracy every two years as part of normal maintenance. However, either party to this Agreement may, at its option, request or cause the Master Meter to be tested for accuracy at any other time between the biennial checks. The PUD shall provide the City with notice of its biennial test of the Master Meter sufficient to provide the City with reasonable opportunity to observe the testing process. The PUD will provide a copy of written results to the City concerning biennial testing within ten days following completion of such testing. All tests shall be conducted in a manner agreeable to both parties and the costs of the testing other than the biennial check shall be borne in the following manner: If both parties agree to the test, then costs will be shared equally. If either of the parties singularly requests the test, then the cost shall be borne by the party causing the test to be performed, providing the test indicates the meter to be performing within 2% of actual delivery amount. In the event the meter is not performing within the allowable limit, then the party benefiting as a result of the malfunction shall bear the cost of the test. Also, in such event an adjustment in charges for water supply shall be determined as follows:

The meter error percentage determined from the test shall be used to adjust recorded deliveries and shall apply for a period of time being one-half the time between the last satisfactory test and the test at which the malfunction was determined, plus all of the time between discovery of

the error and completion of repairs or adjustment of the meter. Either a credit reimbursement or additional billing at the "Everett Wholesale Rate – PUD" shall accrue to the appropriate party.

C. The "Master Meter" installation shall include test ports for testing of the "Master Meter," with appropriate valving and bypass around said meter to facilitate testing. The PUD will provide and insert a test meter for accuracy certification of the "Master Meter." A strainer immediately upstream of the "Master Meter" will be included as part of the "Master Meter" installation.

D. Should the test meter record a different consumption than the master meter, consumption will be adjusted to the test meter as aforementioned. Consumption will continue to be based upon an adjustment to the test meter unless the master meter is recalibrated.

V

WATER QUALITY AND PRESSURE; EMERGENCY WATER SUPPLY

A. The City will make every reasonable effort to deliver a quality of water to the PUD connection point equal to the quality delivered to the City by the City of Everett under Section 4G of the "Everett and JOA Participants Water Supply Contract," and the City makes no other promise, representation, or warranty regarding the quality of water delivered to the PUD.

B. The City shall deliver water supply to the PUD's point(s) of connection on the JOA-I Pipeline at an hydraulic grade line equal to the grade line at the point of connection of the Pipeline to the City of Everett's water transmission pipeline, less pipeline head friction losses. A flow control valve to maintain such hydraulic grade, if necessary, shall be installed at the PUD's request at a point downstream of the PUD's last point of connection to the JOA-I Pipeline. The PUD agrees that it shall pay the cost of installation of such a valve, not to exceed the sum of ten thousand dollars ($10,000.00); the City agrees that it shall cause such valve to be installed within a reasonable time following the PUD's request for installation. Payment for valve installation shall be within 30 days following operational completion of valve installation.

C. Should the City of Everett water supply through the JOA-I Pipeline be limited or interrupted for any reason, the PUD may request emergency supply from the City. In the event other water supply, such as from the City's well system is available through the Pipeline to respond to a request for such emergency supply and the City determines in its discretion to supply such water, and the PUD agrees to accept such water, the quality of water supplied shall be equal to the water that the City supplies to its own customers in the affected area. Should the City supply and the PUD accept water under this paragraph, such supply shall be at the City's regular industrial water rate, as provided in Chapter 14.07 Marysville Code.

D. The PUD shall provide means, at its own expense, to assure that PUD water will not backflow into the City system. Both parties agree that they will continue to cooperate on an ongoing basis with the City of Everett to pursue compliance with the Federal Safe Drinking Water Act – Public Law 93-523.

VI

OPERATION AND MAINTENANCE CHARGE

The City will be compensated for its operation and maintenance costs of the JOA-I Pipeline. The charge to the PUD shall be billed yearly on March 31 based upon the following elements and computation formulas:

PUD will pay Everett directly for its wholesale water delivered through the JOA-I Pipeline. PUD will pay to Marysville a yearly lump sum payment for JOA-I Pipeline operation and maintenance based upon the previous year's costs as described below, multiplied by the percentage of PUD "assigned capacity rights" in the Pipeline (as it existed at the time the operation and maintenance costs accrued to the CITY), plus an annual charge associated with administration of this Agreement, as described below.

COMPUTATION OF CHARGE

The JOA-I operation and maintenance cost

$$R = [(P + M)(1.0 + OH)]\ (CR)$$

R	=	JOA-I O&M Costs
P	=	Power cost for preceding year
M	=	Operation and Maintenance cost for preceding year allocated to Pipeline (excluding overhead)
OH	=	Water utility overhead rate
CR		PUD "assigned capacity rights" in JOA-I Pipeline (16.55% as of the effective date of this Agreement)

Power Cost = P:

Power cost (P) shall include all electrical charges associated with the JOA-I Pipeline.

Operation and Maintenance Cost = M:

Operation and Maintenance costs (M) shall include all direct and indirect costs, including repairs and replacement due to casualty, but shall exclude overhead attributable to the JOA-I Pipeline.

Water Utility Overhead Rate = OH:

The formula for determining the overhead rate (OH) is attached as Exhibit B and includes the following components.

- General and specific overhead direct and indirect associated with water service excluding meter reading and billing cost
- Professional services for O&M
- Insurance
- Taxes and assessments
- Transmission and distribution supervision

NOTE: Because the formula set forth in Section VII does not include Pipeline depreciation, it is understood that the PUD intends to pay for its share of capital facilities replacement or new capital facilities through a cash contribution at the time of replacement or new construction. However, the PUD is not obligated under this section to participate in replacement of the JOA-I Pipeline. If it participates in replacement of the Pipeline, the PUD's share shall be based upon its percentage share of allocated capacity in the JOA-I Pipeline as determined at the time of the capital facilities replacement or new construction. Payment by the PUD for its agreed pipeline capacity share shall be made within sixty (60) days of the date that Marysville gives notice to the PUD of the completion of the capital facility and the actual cost of the same.

METER READING AND ADMINISTRATION CHARGES

The PUD shall pay an annual administrative charge of $100 for costs associated with meter reading, billing expense, reports, and collection.

VII

BILLING AND PAYMENT-ANNUAL ADMINISTRATION AND O&M COSTS

The PUD's share of JOA-I annual operation and maintenance costs and administration costs shall be paid within thirty (30) days of the City's billing, which shall occur on or about March 31 each year during the term hereof.

If any payment or portion thereof due to the City shall remain unpaid for thirty (30) days following its due date, the PUD shall be charged with and pay to the City interest on the amount unpaid from its due date until paid at the rate of 12% per annum. In the event the City is required to collect any delinquent fees, rates, costs, or billings which become past due, both parties stipulate and consent to both venue and jurisdiction of the Snohomish County Superior Court. The substantially prevailing party in such action shall be entitled to its cost and reasonable attorney fees from the other party.

VIII

TERM AND EXPIRATION

(1) The term of this Agreement shall be from the date of its mutual acceptance by all parties and extend for the useful life of the JOA-I Pipeline. Provided, that this Agreement shall be subject to review and modification by the parties every ten years from the effective date. The written agreement of both parties shall be required for any amendment hereof.

IX

DISPUTE RESOLUTION

The parties desire to avoid and settle without litigation future disputes which may arise between them relative to this Agreement. Accordingly, the parties agree to engage in good faith negotiations to resolve any such dispute. Such negotiations shall be first conducted at the water utility staff level and if unsuccessful, may then proceed to the level of respective water utility management, then to the CITY's Mayor and the PUD's General Manager, respectively. Should settlement negotiations prove unsuccessful, the parties may proceed to litigation.

Jurisdiction and venue for any action relating to the interpretation, enforcement, or any dispute arising from this agreement shall be in Snohomish County Superior Court.

This Agreement shall be construed, and the legal relations between the parties hereto, shall be determined in accordance with the substantive law of the State of Washington.

The substantially prevailing party in any litigation brought to enforce rights or obligations of either party under this Agreement or any appeal of judgment in such litigation shall be entitled to its costs and reasonable attorney fees.

X

WAIVER, ASSIGNMENT, NOTICES, AND ENTIRETY

(1) Waiver: No waiver by either party hereto of any terms or conditions of this Agreement shall be deemed or construed to be a waiver of any other term or condition, nor shall the waiver of any breach be deemed to construed to constitute a waiver of any subsequent breach, whether of the same or any other term or condition of this Agreement.

(2) Assignment: Except where one of the parties merges or combines with another entity, neither this Agreement nor any of the rights, interest, or obligations created hereunder may be

assigned by either party without the written consent of the other party. This Agreement shall be binding upon the successors and assigns of the parties.

(3) Notices: Notices required or permitted to be given hereunder shall become effective upon being deposited as registered or certified mail in a United States Post Office, addressed as follows:

To Snohomish County Public Utility District No. 1:

President, Board of Commissioners
P.O. Box 1107
Everett, WA 98206

To The City:

Honorable Mayor
City of Marysville
Marysville City Hall
4822 Grove Street
Marysville, WA 98270

or to such other address as may be substituted in writing by the addressee.

(4) Entirety: Except as provided in the JOA between the parties, as specifically modified herein, all prior negotiations and agreements between the parties hereto relating to the subject matter hereof are merged into and superseded by this Agreement, and shall constitute the entire final and exclusive agreement between the PUD and the CITY concerning the sale of water to the PUD for the use as hereinbefore provided.

This Agreement shall be executed in two duplicate counterparts, each of which shall be deemed an original, but both of which together shall constitute one and the same instrument.

DATED this 23rd day of June, 2003

PUBLIC UTILITY DISTRICT NO. 1
OF SNOHOMISH COUNTY

By: _____
Title

(Seal)

Attest: _____
Title

Approved
as to Form: _____
General Counsel

CITY OF MARYSVILLE

By: _____
Mayor

(Seal)

Attest: _____
City Clerk

Approved
as to Form: _____
City Attorney

EXHIBIT 2

CAPACITY RIGHTS
JOA-I PIPELINE

Entity	Percent of Pipeline Capacity
Marysville Tulalip Tribes PUD	63.65 19.80 16.55
Total	100.00

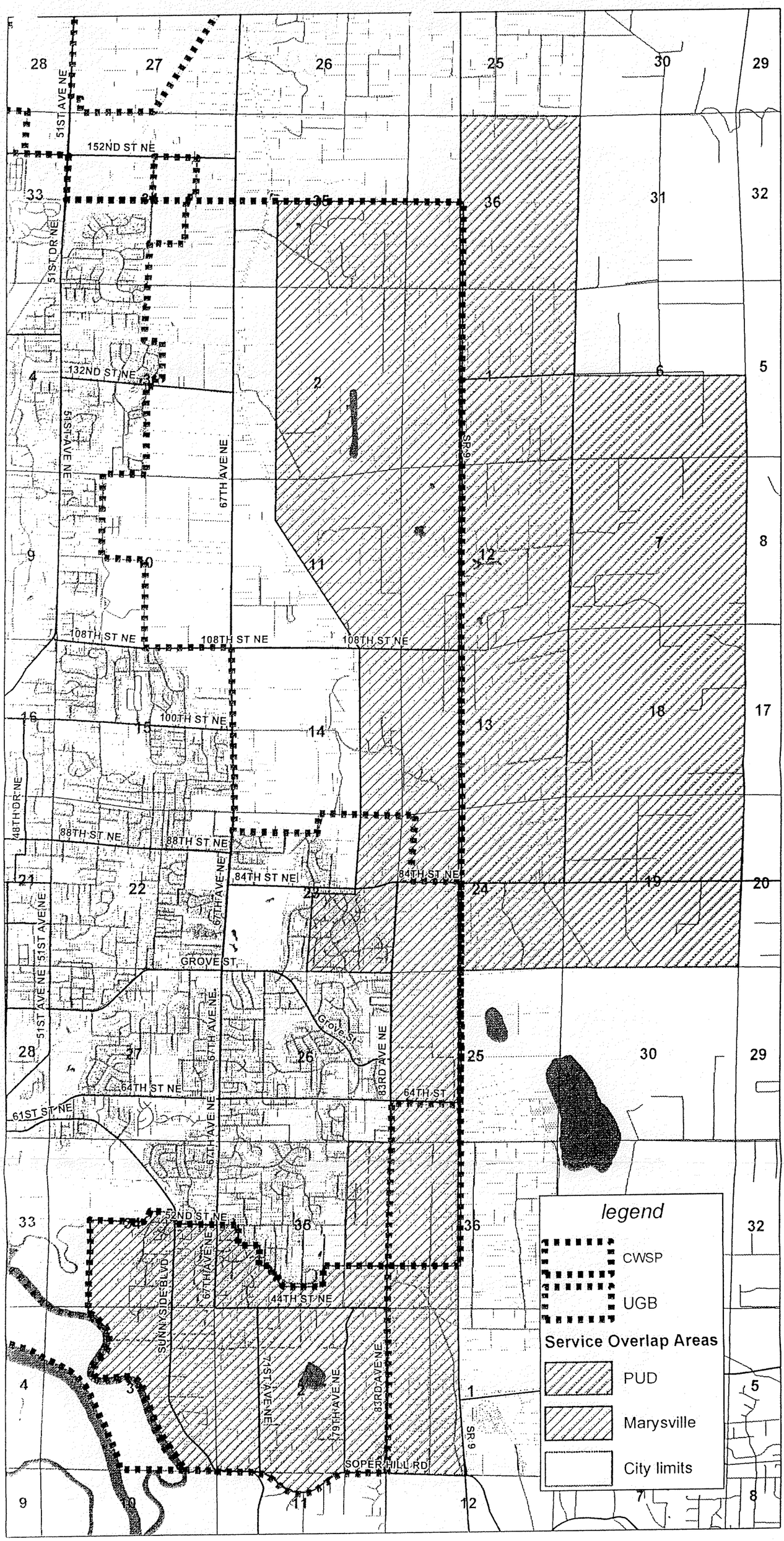
legend
CWSP
UGB
Service Overlap Areas
PUD
Marysville
City limits
152ND ST NE
132ND ST NE
108TH ST NE
100TH ST NE
88TH ST NE
84TH ST NE
64TH ST NE
64TH ST
61ST ST NE
52ND ST NE
44TH ST NE
SOPER HILL RD
GROVE ST
51ST AVE NE
51ST DR NE
54TH AVE NE
67TH AVE NE
48TH DR NE
SUNNYSIDE BLVD
71ST AVE NE
79TH AVE NE
83RD AVE NE
SR 9

EXHIBIT 1

FIRST AMENDMENT TO 2003 AGREEMENT BETWEEN CITY OF MARYSVILLE AND PUBLIC UTILITY DISTRICT NO. 1 OF SNOHOMISH COUNTY FOR WATER SUPPLY

THIS FIRST AMENDMENT TO THE 2003 AGREEMENT BETWEEN CITY OF MARYSVILLE AND PUBLIC UTILITY DISTRICT NO. 1 OF SNOHOMISH FOR WATER SUPPLY is entered into by and between THE CITY OF MARYSVILLE ("CITY"), and PUBLIC UTILITY DISTRICT NO. 1 OF SNOHOMISH COUNTY ("PUD"), and is effective upon execution by both parties.

WHEREAS, in 2003 the City and the PUD entered into an agreement for water supply (the "2003 Agreement"); and

WHEREAS, Section II(A) of the 2003 Agreement provides in part that "At such time as the City extends its corporate boundaries to include areas within that "overlap area" described in Exhibit 1, attached hereto and incorporated by this reference, any applicable service area and any part(s) of the PUD's "Distribution Facilities" used to serve PUD water utility customers within such areas, upon written request of the City, shall to the extent and in the manner provided by law, be conveyed by the PUD to the City"; and

WHEREAS, the City has annexed all portions of the original "overlap area" for which it desires to take ownership of the PUD's Distribution Facilities and service area; and

WHEREAS, the City has made written request for conveyance of the Distribution Facilities within the annexed portion of the "overlap area" and the City and PUD wish to implement the conveyance of the Distribution Facilities and service area intended by the 2003 Agreement; and

WHEREAS the 2003 Agreement did not include any provisions addressing the timing and schedule for transferring ownership and control of PUD Distribution Facilities, nor any detail about the actions the parties would need to take to adjust their water system boundaries to avoid adverse impacts on the PUD system, and to take into account each party's respective water system hydraulics and prudent engineering and water system operating practices; and

WHEREAS, the parties have reevaluated the extent of the original "overlap area" defined in 2003 and the compensation to be paid to the PUD for conveying a portion of its Distribution Facilities and service area, and have evaluated and agreed upon the actions the parties ought to take to provide for an orderly and efficient transfer of ownership to the City; and

WHEREAS, the parties have concluded it is beneficial to request a legislative amendment to RCW 54.16.180 in order to implement the conveyance by the PUD to the City "to

ORIGINAL

the extent and in the manner provided by law" as specified in Section II(A) of the 2003 Agreement, and to amend the 2003 Agreement as set forth herein.

FOR AND IN CONSIDERATION OF THE AGREEMENTS SET FORTH HEREIN, THE 2003 AGREEMENT IS HEREBY AMENDED AS FOLLOWS:

Capitalized terms used in this Amendment not defined herein shall have the same meaning as set forth in the 2003 Agreement unless the context shall clearly indicate that another meaning is intended.

1. **Amendment of "Overlap Area.".** The area described in Section II(A) and Exhibit 1 of the 2003 Agreement referenced as the "overlap area" is hereby amended as depicted in **Exhibit 1(A)** attached hereto and incorporated by this reference and as legally described in **Exhibit 1(B)**, also attached hereto and incorporated by this reference (hereinafter the "Amended Overlap Area"), and Exhibits 1(A) and 1(B) are hereby substituted for Exhibit 1. The Amended Overlap Area to be transferred to the City is generally described as the area north of Soper Hill Road and west of SR-9 and will exclude any area east of SR-9 which shall not be subject to future transfer to the City. The Distribution Facilities and service area to be conveyed pursuant to this Section II(A) are generally depicted in **Exhibit 5(A)** attached hereto and incorporated by this reference, and consist of approximately the following (hereinafter the "Transferred Facilities"):

11,823 Lineal Feet (LF) of AC mains, sizes 4-inch to 8-inch
101,581 LF of DI mains, sizes 4-inch to 12-inch
168 Fire Hydrants
Approximately 1,800 services
Various associated valves and other appurtenances
Easements or partial assignments of easements for such facilities

2. **Construction of Improvements by City.** In order to provide the customers in the Amended Overlap Area with a level of water utility service consistent with the service level presently provided by PUD, prior to closing of the transfer of ownership and operation of the Transferred Facilities to the City, the City shall construct, at its expense, the system improvements referenced below entitled "Phase 1 Water Main Improvements." Said improvements are also depicted in **Exhibit 2(A)** attached hereto and incorporated by this reference. The construction of said improvements shall be completed by December 31, 2013, or such dates as may be mutually agreed to by the parties.

Phase 1 Water Main Improvements
Construct 2013

Location			Proposed Diameter (inches)	Length (LF)
In	Start	End		
Soper Hill Rd	87th Ave	71st Ave	12	6,120
83rd Ave	60th St	~47th St.	16	4,110
49th St	~70th Dr	71st Dr	8	145
Sunnyside Blvd	~32nd St	71st Ave	12	2,974
*99th Ave	~SR 92	42nd St	12	2,200
*42nd St NE	99th Ave	SR9	12	3,000

*[Subject to (3) below]

3. **Construction of New 12-Inch Main by City.** In addition to those improvements referenced in Section (2) above and in **Exhibit 2(A)**, and prior to the closing of the transfer of ownership and operation of the Transferred Facilities to the City, the City will construct and convey by bill of sale substantially in the form attached as **Exhibit 3(A)**, at no cost to the PUD, a new 12-inch main from the end of the PUD's existing 6-inch AC main south of SR-92, north along 99th Avenue, N.E., to 42nd Street, N.E., and then west along 42nd Street, N.E., to the intersection of 42nd Street, N.E., and SR-9 (approximately one mile). For a period of ten years from the date of closing of the transfer and conveyance to the City of the Transferred Facilities, the PUD will pay to the City the applicable portion of each Distribution System Charge collected by PUD for any new connection to this 12-inch main pursuant to Section 3.3.9 of its published Water System Policies and Procedures, as amended from time to time. "Distribution System Charge" means the Distribution System Charge required by the PUD as a condition of approving and installing a new water service connection, as set forth in the most current version of the PUD's published water rate schedules, as amended from time to time. Payment shall be made to the City approximately thirty days of PUD's receipt of the Distribution System Charge from the customer.

4. **Amendment of Purchase Price.**

A. 2003 Agreement. The following language of Section II(A) of the 2003 Agreement is hereby deleted and replaced with the language below, identified for this Amendment as subsections 4(B) and 4(C) below:

> "The purchase price to be paid by the CITY for facilities subject to such conveyance shall be based upon the annexed customer's pro-rated share of the PUD's outstanding water system bonded indebtedness, including any bonded indebtedness relating

to the JOA-1 Pipeline, as determined by the revenues derived by the PUD from the annexed customers compared to the total rate revenues of the PUD water system."

B. The purchase price to be paid by the City for the Transferred Facilities shall be based upon the fair market value of the facilities and service area to be conveyed, to be negotiated and mutually agreed upon as set forth herein,

C. Establishment of final purchase price. The City and PUD have agreed to retain the firm of FCS Group to perform an analysis and determine a fair market value or range of fair market value for the facilities and service area to be conveyed. The contracted-for amount for such analysis shall not exceed a total of $49,530. Each party agrees to share the cost of such analysis equally whether the sale from the PUD to the City closes or not. While this analysis shall serve as a guide regarding the fair market value of the facilities and service area to be transferred to the City, neither party shall be bound thereby unless the fair market value established by FCS Group or a different value for the purchase price is mutually agreed upon. In the event the City and PUD are unable to agree upon the final purchase price for the facilities and service area described in Section II(A) and **Exhibit 5(A)**, the parties agree to the establishment of the final purchase price through the dispute resolution process set forth in Section IX of the 2003 Agreement, or in the alternative, but only by mutual agreement, through final binding arbitration pursuant to Chapter 7.04A, RCW.

5. **Flow Control Valve and Meters.** Prior to the closing referenced in Section 8 below, the City will move the flow control valve on the JOA Pipeline referenced in Section V(B) of the 2003 Agreement to a point mutually agreed upon north of Soper Hill Road. PUD agrees to pay Marysville $10,000 toward the cost of moving said flow control valve. There are presently two meters at the Hewitt location. The master meter used for the City of Everett billing information will remain in its present location. The mag-meter owned by the City of Marysville at the same location will be removed at the City's expense.

6. **Operation and Maintenance Charge**. Section VI of the 2003 Agreement requires PUD to compensate the City for its operation and maintenance costs of the JOA-1 Pipeline. Prior to the closing referenced in Section 8 below, PUD agrees to pay Marysville past due operation and maintenance charges for the time period of 2003 to 2010 in the amount of $115,626.54. Said amount shall be exclusive of any other operation and maintenance charges due and owing by PUD under the 2003 Agreement for the period of January 1, 2011 to the date of closing.

7. **Pending Legislation**. Except as provided in Section 4(C) above with respect to the third party fair market value analysis, this First Amendment to the 2003 Agreement shall be subject to and conditioned upon an amendment to RCW 54.16.180, in substantially the form attached hereto as **Exhibit 4(A)**, becoming law. Provided, however, in the event such an

amendment to RCW 54.16.180 does not become law and this Agreement does not become effective, neither party hereto waives any rights or remedies it may have under the 2003 Agreement or in law or equity.

8. **Closing**. The conveyance by PUD to the City of the Transferred Facilities shall be closed by the firm of Weed, Graafstra and Benson, Inc., P.S. upon the satisfaction of each of the events referenced in Sections 1, 2, 3, 4(C), 5, 6 and 7 and **Exhibit 2(A)** of this Agreement. The parties anticipate closing on or before December 31. 2013, but may upon mutual agreement extend the closing date. The costs associated with closing shall be divided equally.

9. **2003 Agreement**. Except as provided herein, all provisions of the 2003 Agreement shall remain in full force and effect, unchanged. In the event of any inconsistency between this First Amendment and the 2003 Agreement, this Amendment shall control.

10. **Entirety**. Except as provided in the JOA between the parties, and the 2003 Agreement as specifically modified herein, all prior negotiations and agreements between the parties hereto relating to the subject matter hereof are merged into and superseded by this First Amendment to the 2003 Agreement, and shall constitute the entire final and exclusive agreement between the PUD and the CITY.

11. **Equal Bargaining.** This agreement has been drafted by the mutual efforts of the parties. City and PUD acknowledge and represent that each of them is fully competent to negotiate and to enter into this agreement with the other and that they have freely entered into it with adequate opportunity for prior consultation with legal counsel of their choosing. All terms and provisions shall be given their fair and reasonable interpretation without reference to which party, or its counsel, drafted any particular term or provision in question.

This Agreement shall be executed in two duplicate counterparts, each of which shall be deemed an original, but both of which together shall constitute one and the same instrument.

DATED this 21 day of June, 2011.

PUBLIC UTILITY DISTRICT NO. 1
OF SNOHOMISH COUNTY

By: _____ 6/21/11
Date

APPROVED AS TO FORM:

By: _____
Anne Spangler, General Counsel for PUD

CITY OF MARYSVILLE

By: _____ 6/27/2011
Jon Nehring, Mayor Date

Attest: _____
April O'Brien, Deputy City Clerk

APPROVED AS TO FORM:

By: _____
Grant K. Weed, City Attorney

SECOND AMENDMENT TO 2003 AGREEMENT BETWEEN CITY OF MARYSVILLE AND PUBLIC UTILITY DISTRICT NO. 1 OF SNOHOMISH COUNTY FOR WATER SUPPLY

THIS SECOND AMENDMENT TO THE 2003 AGREEMENT BETWEEN CITY OF MARYSVILLE AND PUBLIC UTILITY DISTRICT NO. 1 OF SNOHOMISH FOR WATER SUPPLY is entered into by and between THE CITY OF MARYSVILLE ("CITY"), and PUBLIC UTILITY DISTRICT NO. 1 OF SNOHOMISH COUNTY ("PUD"), and is effective upon execution by both parties.

WHEREAS, in 2003 the City and the PUD entered into an agreement for water supply (the "2003 Agreement"); and

WHEREAS, in 2011, the City and the PUD entered into a First Amendment to the 2003 Agreement ("First Amendment") to provide clarification and certain changes to the portions of the 2003 Agreement relating to the transfer of the "overlap area" from the PUD to the City; and

WHEREAS, the First Amendment included a process for determining the purchase price to be paid by the City to the PUD for the acquisition of the PUD's facilities in the "overlap area," but not the price itself, and so the parties now wish to add to the "as amended" 2003 Agreement the purchase price for the transferred facilities as well certain details about the handling of General Facilities Charges for customers in the affected area.

FOR AND IN CONSIDERATION OF THE AGREEMENTS SET FORTH HEREIN, THE 2003 AGREEMENT, AS AMENDED, IS HEREBY FURTHER AMENDED AS FOLLOWS:

1. **Amendment of Purchase Price.**

The following provisions are added to Section II(A), following subsection 4(C) of the First Amendment:

Agreement upon final purchase price. The City and the PUD have agreed upon the amount of $4,635,000 as the final purchase price for the facilities and service area described in Section II(A) and Exhibit 5(A). The City will pay this purchase price amount at Closing as provided in Paragraph 8 of the First Amendment, and the PUD shall provide a bill of sale in the form attached as Exhibit 1 hereto for the transferred facilities at said Closing.

Treatment of General Facilities Charges for Existing Customers. Pursuant to its Water Service Policies and Procedures Manual, the PUD has authorized property developers who have extended water facilities for lots within the "overlap area" to defer General Facilities Charges ("GFCs") on new service connections. The PUD's Manual permits the deferral of the GFC

ORIGINAL

charges that would ordinarily be due upon completion and conveyance of the water facilities, to a later date when individual service connections are established for the affected lots. The City and the PUD have agreed that the PUD may collect such deferred GFCs for lots within the "overlap area" up to and until the date of Closing, and that after the date of Closing, the City will not collect a GFC charge (or other charge for the costs of source, storage, treatment, and transmission to support these customers) for those lots that paid a GFC to the PUD prior to the date of Closing. All GFC charges which have not been paid to PUD prior to closing shall be paid to the City and PUD hereby assigns and transfers to the City all rights to collect such GFCs.

This Agreement shall be executed in two duplicate counterparts, each of which shall be deemed an original, but both of which together shall constitute one and the same instrument.

DATED this 22nd day of May, 2012.

PUBLIC UTILITY DISTRICT NO. 1 OF SNOHOMISH COUNTY

By: _____ 5-22-12
Steven J. Klein, General Manager Date

APPROVED AS TO FORM:

By: _____
Anne Spangler, General Counsel for PUD

CITY OF MARYSVILLE

By: _____ 5/29/12
Jon Nehring, Mayor Date

Attest: _____
April O'Brien, Deputy City Clerk

APPROVED AS TO FORM:

By: _____
Grant K. Weed, City Attorney

W/M-12-021/2nd amend 2003 PUD water supply.F /

SNOHOMISH COUNTY PUD
PUBLIC UTILITY DISTRICT NO. 1

OFFICE OF THE GENERAL COUNSEL
2320 California Street • Everett, WA • 98201 • 425-783-8212
Toll-free in Western Washington at 1-877-783-1000, ext. 8212
FAX 425-783-8305 • www.snopud.com
Mailing Address: P.O. Box 1107 • Everett, WA • 98206-1107

May 23, 2012

RECEIVED
MAY 24 2012
WGB, INC., P.S.

Grant K. Weed, Esq.
Weed, Graafstra & Benson, P.S.
21 Avenue A
Snohomish, WA 98290

Re: Second Amendment to 2003 Agreement Between City of Marysville and Public Utility District No. 1 of Snohomish County for Water Supply

Dear Mr. Weed:

Enclosed is an original amendment referenced above executed by Steven Klein, General Manager, and approved as to form by Anne Spangler, General Counsel. Please send a countersigned amendment executed by the City of Marysville and yourself for the District's file.

The "Bill of Sale – Water" document will be executed and mailed to you when it is closer to the closing date in December 2013.

Thank you,

Susan Waterman

Susan Waterman
Legal Services Administrator

Enclosure

cc: Com Dev
MRSC
Code Pub
orig: File

CITY OF MARYSVILLE
Marysville, Washington
ORDINANCE NO. 2661

AN ORDINANCE OF THE CITY OF MARYSVILLE ANNEXING CERTAIN UNINCORPORATED AREA, KNOWN AS THE SUNNYSIDE-WHISKEY RIDGE "EXPANDED" ANNEXATION (Includes Whiskey Ridge-North Annexation) , INTO THE CITY OF MARYSVILLE.

WHEREAS, the City of Marysville received two (2) petitions for annexation (Sunnyside-Whiskey Ridge PA 06005 & Whiskey Ridge-North PA 05056), each having been signed or consented to by the owners of the not less than sixty percent (60%) of the assessed value of said properties; and

WHEREAS, the 60% annexation petitions have been reviewed by the Snohomish County Assessor's Office for sufficiency as required by law, and on May 16, 2006 the Assessor's Office issued a Certificate of Sufficiency for the Sunnyside-Whiskey Ridge Annexation, and on June 6, 2006 the Assessor's Office issued a Certificate of Sufficiency for the Whiskey Ridge-North Annexation; and

WHEREAS, a duly-advertised public hearing was held on the Sunnyside-Whiskey Ridge Annexation petition before the Marysville City Council on June 12, 2006 and said Council passed Resolution No. 2179 stating the City's intention to annex the property upon receipt of a favorable decision or report from the Washington State Boundary Review Board for Snohomish County; and

WHEREAS, a duly-advertised public hearing was held on the Whiskey Ridge-North Annexation petition before the Marysville City Council on June 26, 2006 and said Council passed Resolution No. 2181 stating the City's intention to annex the property upon receipt of a favorable decision or report from the Washington State Boundary Review Board for Snohomish County; and

WHEREAS, on June 13, 2006, jurisdiction of the Washington State Boundary Review Board for Snohomish County was invoked by the City of Marysville, with the request that the Washington State Boundary Review Board for Snohomish County modify the annexation to combine the Sunnyside-Whiskey Ridge Annexation with the Whiskey Ridge-North Annexation, to include approximately 273.61 additional acres to the Sunnyside-Whiskey Ridge Annexation, bringing the total acreage to approximately 1535.68-acres, as described in **Exhibit A** and depicted in the **Exhibit B** map, each of which are attached hereto; and

WHEREAS, after notice duly given as required by statute as well as hearing notices mailed to the property owners in the proposed modified area, a public hearing was held on August 8, 2006, before a quorum of the Washington State Boundary Review Board for Snohomish County, whereby a motion was made, seconded, and passed on a vote of 3:0 to approve the City of Marysville Sunnyside-Whiskey Ridge "Expanded" Annexation as requested to be modified to include approximately 273.61 additional acres, bringing the total acreage to approximately 1535.68-acres, as described in **Exhibit A** and depicted in the **Exhibit B** map, each of which are attached hereto; and

WHEREAS, under File No. 13-2006, the Finding and Decision of the Washington State Boundary Review Board for the City of Marysville's Sunnyside-Whiskey Ridge "Expanded"

Annexation were adopted by a vote of 3:0 on August 15, 2006. Said Findings and Decision are attached and incorporated by this reference as **Exhibit C**; NOW, THEREFORE,

THE CITY COUNCIL OF THE CITY OF MARYSVILLE, WASHINGTON DO ORDAIN AS FOLLOWS:

Section 1. The property described and depicted in attached **Exhibits A** and **B**, being situated in the unincorporated area of Snohomish County, State of Washington, and being contiguous, proximate and adjacent to the present corporate limits of the City of Marysville, be and the same is hereby annexed to and incorporated into the City of Marysville.

Section 2. The property described and depicted in attached **Exhibits A** and **B** shall hereafter be assessed and taxed at the same rate and on the same basis as other property within the City of Marysville, including assessments or taxes in payment of all of the outstanding indebtedness of the City contracted or incurred prior to, or existing on, the effective date of this ordinance.

Section 3. The Comprehensive Plan for the City of Marysville designates the property described and depicted in attached **Exhibits A** and **B** into five (5) separate and distinct land use designations, including Medium Density Single-family (located west of 67th Avenue NE), High Density Single-family (located east of 67th Avenue NE and west of 83rd Avenue NE, north of the 5400 Block and east of SR 9), Neighborhood Business (parcel specific APN 29050300402200), Open Space (existing floodplain) and Recreation (Deering Wildflower Acres). These land use designations shall apply to said properties and the properties shall be and are hereby zoned R-4.5 (medium density single-family), R-6.5 (high density single-family), NB (neighborhood business), Open Space and REC (recreation). An area located north of Soper Hill Road, east of 83rd Avenue NE, south of the 5400 Block and west of SR 9, will remain undesignated subject to adoption of the "Whiskey Ridge Master Plan."

The City's official zoning map shall be amended to be consistent with said zoning.

Section 4. EFFECTIVE DATE. The effective date of this ordinance shall be December 1, 2006.

Section 5. Severability. If any section, subsection, sentence, clause, phrase or work of this ordinance should be held to be invalid or unconstitutional by a court of competent jurisdiction, such invalidity or unconstitutionality thereof shall not affect the validity or constitutionality of any other section, subsection, sentence, clause, phrase or word of this ordinance.

PASSED by the City Council and APPROVED by the Mayor this 9th day of October, 2006.

CITY OF MARYSVILLE

By: Dennis L Kendall

DENNIS KENDALL, MAYOR

Attest:

By: Lillie Lein
CITY CLERK (Deputy)

Approved as to form:

By: Grant K. Weed
GRANT K. WEED, CITY ATTORNEY

Date of Publication: 10/11/06

Effective Date: December 1, 2006

EXHIBIT A

SUNNYSIDE/WHISKEY RIDGE ANNEXATION
CITY OF MARYSVILLE

LEGAL DESCRIPTION

Those portions of Sections 26, 34, 35 and 36, Township 30 North, Range 5 East, W.M.
AND
Those portions of Sections 1, 2, 3, 10 and 11, Township 29 North, Range 5 East, W.M., described as follows:

Commencing at the southeast corner of said Section 3; thence southerly, along the east line of the Northeast Quarter of said Section 10, to the southerly right-of-way line of Sunnyside Boulevard, being the true point of beginning; thence northwesterly, along said right-of-way line, to the south line of said Section 3; thence westerly, along the south line of said Section 3, to the centerline of Ebey Slough; thence northerly, westerly and northerly, along the centerline of said Ebey Slough, to a line 202 feet north of and parallel with the south line of Government Lot 3, said Section 3; thence easterly along said line and along a line 202 feet northerly of the south line of Government Lot 2, said Section 3, being the south line of that Annexation approved on September 27, 1999 under City of Marysville Ordinance No. 2283, to the east right-of-way line of Sunnyside Boulevard; thence northerly, along said right-of-way line a distance of 230 feet; thence easterly, along the south line of said Annexation, to the east line of Government Lot 1, said Section 3; thence northerly, along said east line, to a point 660 feet northerly from the southeast corner of Government Lot 1, said Section 3 and the northeast corner of said Annexation; thence westerly, along the north line of said Annexation, a distance of 300 feet, to the southeast corner of that Annexation approved on December 12, 1994 under City of Marysville Ordinance No. 2012; thence along the east line of said Annexation, North 302 feet; thence East 60 feet; thence North 165 feet; thence West 156 feet; thence North 90.8 feet; thence East to a point 924 feet east of the west line of said Government Lot 1; thence North 74.2 feet; thence West 132 feet to a point 528 feet west of the east line of the Southeast Quarter of said Section 34; thence North 330 feet; thence East 244 feet; thence North 165 feet; thence West 264 feet; thence North 165 feet; thence West to the southeast corner of HUDSON AND BOOTH ACRE TRACTS, according to the plat on file in Volume 10 of Plats, page 104, records of Snohomish County, Washington; thence North, along the east line of said Plat, to the southeast corner of Lot 17, said Plat; thence northerly, along the east line of said Plat and along the east line of that Annexation approved on November 5, 1990 under City of Marysville Ordinance No. 1806, to the south line of the East Half of the Northeast Quarter of the Southeast Quarter of said Section 34;

thence easterly, along said south line and along the south line of said Annexation, to the west right-of-way line of 67TH Avenue N.E., also being the northwest corner of that Annexation approved on February 22, 1993 under City of Marysville Ordinance No. 1938; thence southerly, along said right-of-way line and along the west line of said Annexation and also along the west line of that Annexation approved on December 11, 1995 under City of Marysville Ordinance No. 2057, to the southwest corner of said Annexation, being the south right-of-way line of 44TH Street N.E.; thence easterly, along said right-of-way line and along the south line of said Annexation, to the east right-of-

way line of 75TH Avenue N.E.; thence northerly, along said right-of-way line and along the east line of said Annexation, to the southwest corner of Tract 157, SUNNYSIDE 5 ACRE TRACTS, according to the plat on file in Volume 7 of Plats, page 19, records of Snohomish County, Washington; thence easterly, along the south line of said Tract 157, to the southeast corner of said Tract 157; thence northerly, along the east lines of Tracts 157,156,133,132 and 109, said Plat and along the east line of said Annexation, to the northeast corner of said Tract 109; thence westerly, along the north line of said Tract 109 to the southeast corner of Lot 1 of Short Plat # SP 56 (2-85); thence northerly, along the easterly line of said Lot 1, to the north line of Tract 108, said Plat and the northeast corner of said Annexation; thence easterly, along the north line of said Tract 108 and along the south line of that Annexation approved on November 6, 1989 under City of Marysville Ordinance No. 1734, to the northeast corner of said Tract 108, said corner being the southwest corner of that Annexation approved on November 22, 1993 under City of Marysville Ordinance No. 1970; thence easterly along the north line of Tract 107 of said Plat, and along the south line of said Annexation, to the northwest corner of Tract 106, said Plat and the southeast corner of said Annexation, also being the southwest corner of that Annexation approved on July 10, 1995 under City of Marysville Ordinance No. 2037; thence easterly, along the north line of said Tract 106 and along the south line of said Annexation, to the northeast corner of said Tract 106, also being the southeast corner of said Annexation and the southwest corner of Tract 88, SUNNYSIDE 5 ACRE TRACTS; thence northerly along the west lines of Tracts 88, 81, 64, 57, 40, 33, 16, 9 and the northerly projection of the west line of Tract 9 to the north right-of-way line of 60th Street N.E. and a point on the south line of that Annexation approved on January 28, 1980 under City of Marysville Ordinance No. 1105, also being a point on the south line of Lot B of Short Plat No. SP 86-004, recorded under Auditor's file Number 8605190152, said records of Snohomish County; thence easterly along said right-of-way line and the south line of said Annexation, to the easterly line of said Lot B; thence northerly along the east line of said Lot B and said Annexation to the southwest corner of Lot 2 of Short Plat No. SP 90-007, recorded under Auditor's file number 9104180195, said records of Snohomish County; thence east along the south line of Lots 1 and 2 of said Short Plat and along the south line of that Annexation approved on May 11, 1987, under City of Marysville Ordinance No. 1538 to the west right-of-way line of 83rd Avenue N.E.; thence southerly along said right-of-way line to the westerly projection of the south right-of-way line of 60th Street N.E.; thence easterly along said south right-of-way line to the west right-of-way line of State Highway 9; thence southerly, along said right-of-way of State highway 9, to the north right-of-way line of Soper Hill Road; thence westerly, along said right-of-way line, to the northerly projection of the west line of SOPERWOOD, according to the plat on file in volume 56 of Plats, page 124, records of Snohomish County, Washington; thence southerly, along said northerly projection, to the south right-of-way line of said Soper Hill Road; thence westerly, southwesterly, northwesterly and westerly, along said right-of-way line and along the south right-of-way line of Sunnyside Boulevard, to the west line of said Section 11, being the point of beginning;

EXCEPT that MARYSVILLE SCHOOL DISTRICT NUMBER 25 property being that portion of the Southeast Quarter of the Northeast Quarter
AND
That portion of Government Lot 7, Section 3, Township 29 North, Range 5 East, W.M., described as follows:

Commencing at the southeast corner of the Southeast quarter of the Northeast Quarter of said Section 3; thence northerly, along the east line of said Northeast Quarter, a distance of 631.18 feet to the northeast corner of said Marysville School District Number 25 property according to that

Record of Survey on file under Auditor's File Number 200012295009, records of Snohomish County, Washington, being the true point of beginning; thence southerly, along said east line, a distance of 470.33 feet to the south line of the North Half of the South Half of the South Half of the Southeast Quarter of the Northeast Quarter of said Section 3; thence westerly, along said south line and the a distance of 929.07 feet; thence northerly, parallel with the east line of the Northeast Quarter of said Section 3, a distance of 159.47 feet, to the north line of the North Half of the South Half of the South Half of the Southeast Quarter of the Northeast Quarter of said Section 3; thence westerly, along said north line, to the east right-of-way line of Sunnyside Boulevard; thence northerly, along said right-of-way, a distance of 82.50 feet; thence easterly, parallel with the north line of the North Half of the South Half of the South Half of the Southeast Quarter of the Northeast Quarter of said Section 3, a distance of 460.65 feet; thence northerly, parallel with the east line of said Northeast Quarter, a distance of 226.92 feet; thence easterly to the point of beginning.

ALSO EXCEPT that property described in that Annexation approved on March 23, 1992 under City of Marysville Ordinance No. 1885.

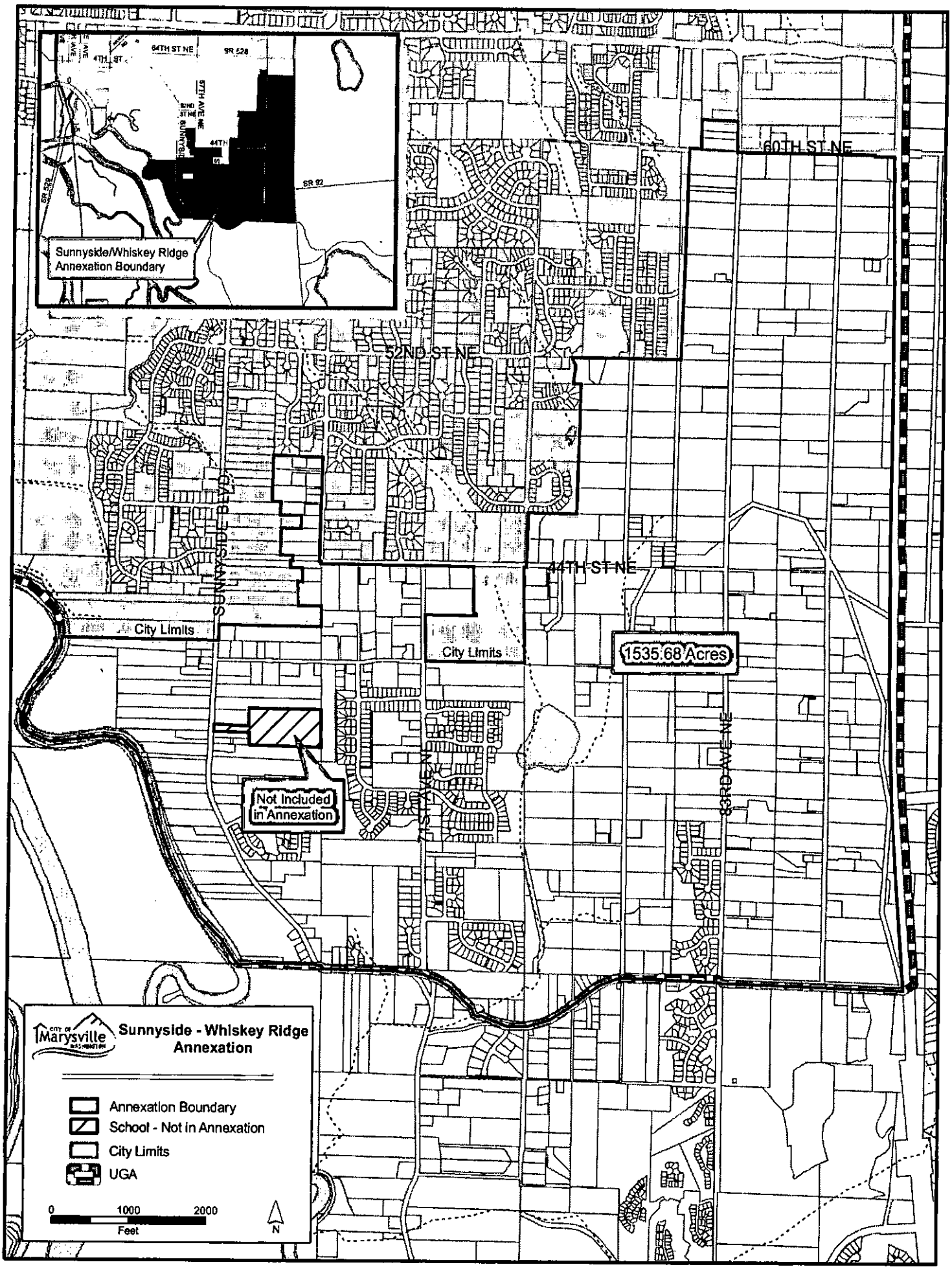
Sunnyside/Whiskey Ridge Annexation Boundary
64TH ST NE
SR 528
67TH AVE NE
44TH
SR 92
60TH ST NE
52ND ST NE
44TH ST NE
SUNNYSIDE BLVD
City Limits
City Limits
1535.68 Acres
Not Included in Annexation
83RD AVE NE
Sunnyside - Whiskey Ridge Annexation
Annexation Boundary
School - Not in Annexation
City Limits
UGA
0
1000
2000
Feet
N

2/1/93

CITY OF MARYSVILLE AND WARM BEACH WATER ASSOCIATION WATER SUPPLY CONTRACT

THIS CONTRACT is made and entered into by and between the City of Marysville, a municipal corporation of the State of Washington, hereinafter referred to as "Marysville," and the Warm Beach Water Association, a non-profit corporation, hereinafter referred to as "Warm Beach."

WHEREAS, Marysville owns and operates a water supply system located north and east of the City known as the Lake Goodwin well. Said system is permitted by the State Department of Ecology and has supply capability at this time for domestic consumption; and

WHEREAS, pursuant to RCW 35.92.170 and RCW 35.92.200, Marysville is authorized to enter into contracts with other parties to supply such parties with water; and

WHEREAS, the Coordinated Water System Plan (CWSP) identifies certain areas of north Snohomish County as being within Marysville's long-range wholesale water supply service area, which includes the area within which Warm Beach serves its customers; and

WHEREAS, Marysville and Warm Beach wish to enter into a wholesale water supply contract wherein a portion of Marysville's Lake Goodwin well water capacity is provided to Warm Beach, to the extent that the Lake Goodwin well remains a viable source of domestic water supply; and

WHEREAS, the Coordinated Water System Plan (CWSP) for north Snohomish County contemplates potential service of water in conjunction with Warm Beach for the area of north Snohomish County presently served by Warm Beach; and

WHEREAS, the findings and recommendations of the CWSP demonstrate an immediate need for additional water supply to meet current and near term water needs of Warm Beach and a need for long term regional solutions through joint use and operation of water transmission and storage facilities; and

WHEREAS, a study of available and alternative sources of water supply conducted by Warm Beach has identified the Marysville Lake Goodwin well as being the best supplemental source for water supply at this time for the Warm Beach service area; NOW, THEREFORE,

FOR THE MUTUAL BENEFITS TO BE DERIVED, THE PARTIES AGREE AS FOLLOWS:

1. DELIVERY OF WATER. Marysville hereby agrees to deliver to Warm Beach and Warm Beach hereby agrees to pay Marysville for the delivery of water to be used as a source of supply in accordance with its usual and accustomed rates and conditions for customers similarly situated and as provided in paragraph 5 hereof.

2. POINT OF DELIVERY. Marysville shall deliver water to Warm Beach at an agreed connection point located approximately at 3914 - 176th Street N.W., Stanwood, Washington. Any other future connection point shall be subject to mutual agreement. Warm Beach shall install, at its sole cost, a master meter system at the connection point. Said master meter installation shall include telemetry of flow data and any necessary control functions and shall meet the specifications and approval of Marysville and shall become the property of Marysville after its installation. The actual point of delivery at the connection or any future connection point shall be the upstream flange of the valve downstream of the master meter and check valve.

3. QUANTITY OF WATER. Marysville agrees to use best efforts, subject to meeting the requirements of all Marysville customers, to provide a regular and uninterrupted supply of water at said point of delivery originating from the Lake Goodwin well head. Provided, Marysville's sole responsibility shall be to provide water to the point of delivery, and Marysville shall not be responsible for guaranteeing a specific pressure, quantity or quality of water beyond the point of delivery. Marysville will also make best efforts to supply up to 200,000 gallons per day, consistent with the Warm Beach Water Supply Demand Table, which is attached and incorporated as **Exhibit A**. The supply to Warm Beach shall be subject to the needs of the Marysville customer base and the capacity of the well to produce sufficient volume to meet demand. The quantity of water delivered shall be measured by the master meter(s) referred to in paragraph 2 above. Nothing herein, however, shall be construed as obligating Warm Beach to take or purchase any minimum quantity of water from Marysville at any time. In the event the Lake Goodwin well fails to produce a quantity of water sufficient to meet the requirements of this contract, Marysville or Warm Beach may terminate this contract, if in Marysville's discretion there is no other viable source available.

4. QUALITY OF WATER. Marysville agrees that all water delivered to Warm Beach at the point of delivery shall be of the same standard and quality as that normally delivered by the Lake Goodwin well system to Marysville customers. Unless otherwise determined by Marysville in its sole discretion, water provided by Marysville shall be solely from the Lake Goodwin well, and

shall be raw, untreated and unfiltered water. The Lake Goodwin well presently provides a source of drinking water which meets state and federal standards for safe, high quality drinking water at the point of delivery. However, in the event the Lake Goodwin well ceases to provide a domestic water supply which meets all applicable federal, state and county drinking water standards, Marysville shall not be obligated to continue providing water (either treated or untreated) from the Lake Goodwin well or any other source, and may, at its option, terminate this contract prior to the expiration date set forth in paragraph 8 herein. In the event the quality of water provided through the Lake Goodwin well system fails to meet any applicable federal, state or county standards, Warm Beach and Marysville may discuss treatment or filtration options, the cost of which shall be borne by Warm Beach, as an alternative to termination of this contract. Marysville shall not be responsible for changes in water quality or operating problems which may result from Warm Beach mixing different sources of water. Warm Beach shall provide means to assure that water from its source will not backflow into the Marysville system.

5. RATES AND CHARGES. Rates shall be established by ordinance of the City of Marysville and shall be based on cost of service principles. The charges for water service shall include a base rate and, subject to availability, an overage charge as established by ordinance, consistent with **Exhibit A**. For purposes of this contract, and subject to approval of a rate ordinance by the Marysville City Council, the initial base rate shall be 62¢ per thousand gallons. Marysville agrees to read the master meter(s) on a monthly basis and provide Warm Beach with the readings by the 7th day of each month. Marysville agrees that Warm Beach shall be served with notice of any future rate modifications or any rate study that will impact Warm Beach at least sixty (60) days prior to consideration of said modifications by the Marysville City Council.

6. PAYMENTS BY WARM BEACH. On a monthly basis, Marysville shall bill Warm Beach for water delivered through the master meter(s) and Warm Beach, directly for water delivered through the master meter(s) at the connection point. Said bill shall be payable within thirty (30) days after receipt of the invoice. Delinquent bills shall accrue interest at the rate of twelve percent (12%) per annum for any delinquency. Any delinquency greater than ninety (90) days shall be grounds for termination of this agreement and discontinuation of water supply to the point of delivery by Marysville.

7. RESALE OR DISTRIBUTION OF WATER BY WARM BEACH. Warm Beach will distribute water received from Marysville in a manner consistent with the Marysville water system plan, the CWSP, and the Warm Beach water system plan, as approved by the Washington State Department of Health, if appropriate. Warm Beach agrees not to serve water received from Marysville pursuant to the terms

of this contract in areas outside the service area for Warm Beach or to sell water on a wholesale basis to any third party. Warm Beach further agrees that it shall not serve water in any area which is within Marysville's service area as it now exists or is hereafter amended, without Marysville's written permission.

8. TERM OF CONTRACT. The term of this contract shall be from the date of its mutual acceptance by Marysville and Warm Beach and until December 31, 2013, or sooner, in the event Warm Beach develops its own independent water supply. In the event Warm Beach develops its own independent water supply and elects to terminate this agreement prior to December 31, 2013, it shall give Marysville at least sixty (60) days' written notice of such intent. By mutual agreement, the parties hereto shall have a right to renew this contract for an extended term of similar duration and for a quantity of water as available from the Lake Goodwin well site, or such other source as Marysville shall determine, and which is consistent with Marysville's customer base and service requirements.

9. CONSTRUCTION, OPERATION AND MAINTENANCE OF IMPROVEMENTS. Warm Beach shall construct all capital improvements to its water systems and shall own all capital improvements downstream from the point(s) of delivery and shall assume exclusive responsibility for the operation, maintenance and repair of the same. All construction, operation and maintenance and repairs shall be in strict compliance with standards approved by the Washington State Department of Health as appropriate. Warm Beach shall annually provide Marysville a water system report to include number of customers, peak use, and other information useful in optimizing joint operations. Except for any initial improvements which are necessary to Marysville's system to enable water to be delivered to the point of delivery, all operation, maintenance and repairs upstream from the point of delivery shall be the responsibility of Marysville. Any new construction shall be by mutual agreement of the parties.

10. ASSIGNMENT; SUCCESSORS BOUND. Neither this contract nor any right or privilege herein shall be assigned by any party without the written consent of the other party. This contract shall apply to and be binding upon the lawful successors of all parties.

11. NOTICES. All notices complying with this contract shall be sent by registered mail as follows:

To Marysville: Mayor
City of Marysville
514 Delta
Marysville WA 98270

To Warm Beach: President
Warm Beach Water Association
18905 - 92nd Drive N.W.
Stanwood, WA 98292

IN WITNESS WHEREOF, the parties have caused this contract to be executed by their proper officers on the 1st day of February, 1993.

CITY OF MARYSVILLE

By _____
DAVE WEISER, Mayor

Attest:

_____
MARY SWENSON, City Clerk

Approved as to form:

_____
GRANT K. WEED, City Attorney

WARM BEACH WATER ASSOCIATION

By _____
AUTHORIZED REPRESENTATIVE

Approved as to form:

_____
J. ROBERT LEACH, Attorney

MEMORANDUM

To: Souheil Nasr, Principal Engineer - Everett Public Works
From: Carl Baird, Senior Environmental Specialist – Everett Public Works
Date: July 17, 2007
Subject: Mutual Aid Agreement between water and sewer utilities (purveyors) in Snohomish County, WA

During 2006, the members of the Everett Water Utilities Committee (EWUC) revised the existing **Sewer and Water Mutual Aid Agreement** that was developed in 1995. This mutual aid agreement is designed for response to disasters and emergencies. The following 13 EWUC members have signed the revised Agreement that is now titled, **Water and Sewer Mutual Aid Agreement – 2006**:

- City of Everett
- City of Lynnwood
- City of Arlington
- City of Snohomish
- Public Utility District of Snohomish County
- Alderwood Water District
- Cross Valley Water District
- Mukilteo Water District
- Olympic View Water and Sewer District
- Silver Lake Water District
- Highland Water District
- City of Marysville
- City of Edmonds

In an effort to minimize the flow of paper, the authorization paragraph (9) was written so that only Everett would need to have signed Agreements from each of the participants. The signature page requires the approval of an individual purveyor only. Two purveyors must approve the Agreement (in the form of a resolution) in order for it to take effect. Upon adoption, a certified copy of the Agreement must be forwarded to the City of Everett. The Everett Utilities Director is responsible for maintaining a current list of mutual aid signatory purveyors that includes the job title of their respective designated official. The Everett Utilities Director is required to distribute an updated list annually and whenever purveyors are added or removed.

Briefly, the Agreement provides the procedure for requesting assistance, responding to a request, controlling personnel, equipment, and materials, and providing cost reimbursement. The reimbursement is based upon the responding purveyor's costs. Insurance and indemnification are also addressed.

WATER AND SEWER MUTUAL AID AGREEMENT - 2006

THIS MUTUAL AID AGREEMENT is by and between all water and sewer utilities (Purveyors) in Snohomish County that have approved this Agreement, who are authorized to provide the benefits and undertake the obligations contained in this Agreement, and have executed this Agreement.

RECITAL

Subject to the terms and conditions below, each of the Purveyors agrees to provide personnel, materials and equipment to other Purveyors who are parties to this Agreement and who request assistance to handle a disaster or emergency.

AGREEMENT

It is agreed by the Purveyors as follows:

1. Request for Assistance. A Purveyor, through its Designated Official, may request another Purveyor to send personnel, materials and equipment to deal with a disaster or emergency. A request for assistance may be oral or written. If the request is oral, it shall be confirmed in writing by the requesting Purveyor's Designated Official as soon as practicable after the request. A written request or confirmation shall be in a form sufficient to demonstrate that it was made by a Designated Official. Each request or confirmation shall describe the equipment, personnel, materials, and other resources that are needed to address the disaster or emergency.

2. Definition of Disaster or Emergency. A disaster or emergency is an event or situation which (1) demands immediate action to preserve public health or protect life or property or (2) reaches a dimension or degree of destructiveness as to warrant the Governor of the State of Washington declaring a state of emergency.

3. Response to Request. The responding Purveyor, through its Designated Official, should, as soon as reasonably possible determine whether personnel, materials and equipment are available to respond to the request for disaster or emergency assistance. Following that determination, the responding Purveyor's Designated Official should, as soon as reasonably possible advise the requesting Purveyor of the availability of personnel, materials and equipment; and, if any or all of such items are available, the approximate time when such will be provided. The judgment of the responding Purveyor's Designated Official shall be final as to the availability of personnel, materials and equipment. A responding Purveyor shall not be liable to the requesting Purveyor or any person or entity for failing to respond to a request for assistance or provide personnel, materials and equipment. By signing this Agreement, any party who requests assistance pursuant to this Agreement waives and releases all claims for damages of any kind against any other party who fails to respond to a request for, or does not provide assistance, personnel, materials or equipment.

4. Control of Personnel and Equipment. Personnel and equipment of the responding Purveyor that are made available to the requesting Purveyor shall, to the fullest extent possible, remain under the control and direction of the responding Purveyor; the responding Purveyor shall be and remain at all times an independent contractor. The responding Purveyor's employees shall remain solely the employees of the responding Purveyor. The requesting

Purveyor shall coordinate the activities of personnel and equipment of the responding Purveyor, provided however, employees of the responding Purveyor remain employees of the responding Purveyor while performing functions and duties on behalf of the requesting Purveyor. The responding Purveyor shall retain the right to withdraw at any time some or all of its personnel, materials and equipment for any reason. Notice of intention to withdraw shall be communicated to the requesting Purveyor's Designated Official, as soon as possible; however, it need not be in writing. A responding Purveyor shall not be liable to the requesting Purveyor or any person or entity for first providing personnel, materials or equipment and later withdrawing some or all of the same personnel, materials or equipment, according to the provisions of this Agreement. By signing this Agreement, any party who requests assistance pursuant to this Agreement waives and releases all claims for damages of any kind against the responding Purveyor for withdrawing some or all of its personnel, materials or equipment that were provided pursuant to this Agreement.

5. Status of Personnel. All privileges, immunities, rights, duties and benefits of officers and employees of the responding Purveyor shall apply while those officers and employees are performing functions and duties on behalf of the requesting Purveyor, unless otherwise provided by law.

6. Indemnification. To the extent permitted by law, the requesting Purveyor shall protect, defend, hold harmless and indemnify all other responding signatory Purveyors, and their officers and employees from any and all claims, suits, costs, damages of any nature, or causes of action, including the cost of defense and attorneys fees, by reason of the acts or omissions, whether negligent, willful, or reckless, of the requesting Purveyor's officers, employees, and

agents arising out of or in connection with any acts or activities authorized by this Agreement, and will pay all judgments, if any, rendered. This obligation shall not include such claims, costs, damages or other expenses which may be caused by the sole negligence of the responding Purveyors or their authorized agents or employees.

This indemnity obligation extends to all claims against the responding Purveyor by an employee or former employee of the requesting Purveyor, and for this purpose, by mutual negotiation, the requesting Purveyor expressly waives as respects to the responding Purveyor only, all immunity and limitation and liability under any industrial insurance act, including Title 51, other worker's compensation act, disability benefit act, or other employee benefit act of any jurisdiction which would otherwise be applicable in the case of such claim.

7. Insurance. A Purveyor shall maintain insurance or adequately self-insure for the activities of its personnel and equipment while operating under this Agreement.

8. Cost Reimbursement. The requesting Purveyor shall reimburse the responding Purveyor for the actual cost of providing assistance. The reimbursement will be based upon the responding Purveyor's regular schedule of hourly rates for personnel and equipment, and the actual costs of materials, reasonable food, lodging and out-of-pocket expenses; reimbursement shall include all salaries, benefits, administrative costs and overhead of the responding Purveyor, determined in accordance with the responding Purveyor's then-existing regularly adopted policies and practices. Reimbursement shall be made within 90 days after receipt by the requesting Purveyor of an itemized voucher of costs. The requesting Purveyor shall have the right to audit books and records related to the cost of providing assistance.

9. Authorization: Effective Date: Duration. A Purveyor shall authorize and approve this Agreement by formal action of its governing body. This Agreement shall be effective upon authorizing actions by two or more Purveyors and is subject to the termination procedures set out herein, and shall remain in effect as long as two or more authorizing actions are in effect. Upon an authorizing action and execution of this Agreement, a Purveyor shall send a certified copy of the action and the Agreement to the City of Everett. The Everett Utilities Director shall maintain a list of mutual aid Purveyors hereunder and the job title of their respective Designated Officials and shall send an updated list to all Purveyors annually, and whenever Purveyors are added to or eliminated from the list or whenever a Purveyor changes the job title or title holder of its Designated Official for this Agreement.

10. Rescission of Prior Agreements.

This Agreement, once formally authorized by each signing Purveyor, shall, one at a time, immediately supersede and rescind that same signing Purveyor's prior SEWER AND WATER MUTUAL AID AGREEMENT (developed in 1995) with all other signers of that Agreement.

11. Termination. This Agreement shall remain binding upon a Purveyor until that Purveyor repeals or revokes its authorizing action. Upon repeal or revocation, the Purveyor shall send a certified copy of the action to the Everett Utilities Director. Withdrawal from this Agreement shall not relieve the withdrawing Purveyor from the obligations incurred under this Agreement prior to the effective date of the withdrawal, which is the date upon which the withdrawing Purveyor delivers a copy of its repealing action or revocation to the Utilities Director for the City of Everett.

12. No Third Party Rights. This Agreement is for the benefit of the Purveyors who are active parties to this Agreement and no other person or entity shall have any rights under this Agreement as a third party beneficiary nor shall any Purveyor owe any duty to a third party not a signatory of this Agreement by virtue of this Agreement.

13. Designated Official. All Agreement references to the Designated Official, whose job title is identified at the end of this Agreement, shall refer to the holder of that job title or his or her designee. The Purveyor may, at its discretion, change the job title of their Designated Official by notifying the City of Everett.

Job Title of Designated Official for the purposes of initiating this Agreement:

_____
[Printed JOB TITLE]

_____
[Printed NAME of PURVEYOR]

By (Signature)_____

_____
[Printed NAME, TITLE]

Dated: _____

ATTEST:

By (Signature)_____

_____
[Printed NAME, TITLE]

Dated: _____

APPROVED AS TO FORM:

By (Signature)_____

_____
[Printed NAME, TITLE]

Dated: _____

APPENDIX D

Contingency Plan for Water Supply Disruptions

City of Marysville
Contingency Plan
for Water Supply Disruptions
During Emergencies

Draft

March 2002

Prepared by

Economic and Engineering Services, Inc.
Bellevue, WA • Portland, OR
Olympia, WA • Tri-Cities, WA • Mount Vernon, WA

Economic and Engineering Services, Inc.

MEMORANDUM

TO: Mr. Kevin Nielson, City of Marysville

FROM: Andrew Graham and Cil Pierce
Economic and Engineering Services, Inc.

DATE: March 13, 2002

CLIENT: Marysville Water System Plan (WSP) Update (#3-01-122)

SUBJECT: Draft Water Shortage Contingency Plan

Please find attached a draft of the Contingency Plan for Water Supply Disruptions. This report will be an appendix to the WSP Update. This draft is provided for City project team review.

This Contingency Plan is intended to address hazards that could cause emergency water supply shortages. The hazards include both natural and human-caused hazards. This plan does not address drought, as drought conditions typically occur over a period of time, and the planning for them is not of an immediate and emergency nature. The City has undertaken a planning process for many of the hazards addressed within the Contingency Plan, which culminated in the City's Emergency Response Plan (ERP). EES has reviewed the City's ERP, and refers to it, as appropriate, within this Contingency Plan. This plan complements the City's previous planning activities as presented in the ERP, and provides additional detail with respect to the water system.

We have done our best to identify hazards and mitigation approaches, based on our understanding of the water system. It is important that Marysville staff familiar with the water system and the City's Emergency Response Plan review the material to ensure the findings and recommendations are appropriate for the City's system.

Thank you in advance for your time in reviewing the document. Once EES has received the City's comments on this draft, we will prepare the final document. Please call me if there are any questions.

cc: Melinda Friedman

12011 Bel-Red Road, Suite 201
Bellevue, Washington 98005-2471
www.ees-1.com
Telephone 425 452-8100

Post Office Box 1989
Bellevue, Washington 98009-1989

Fax 425 454-4189

Bellevue • Olympia • Portland • Tri-Cities • Vancouver, B.C.

Contents

1 Overview of Plan

1.1 Introduction 1-1
1.2 Organization of the Study 1-1
1.3 Coordination with Other Emergency Planning Efforts 1-2
1.4 Summary 1-2

2 Hazard Analysis

2.1 Introduction 2-1
2.2 Natural Emergency Hazards 2-1
2.3 Human-Caused Hazards 2-6
2.4 Summary of Hazard Analysis 2-8

3 Vulnerability Assessment

3.1 Introduction 3-1
3.2 General Water System Description 3-1
3.3 Major System Components 3-1
3.4 Summary 3-10

4 Facility Mitigation, Protection and Backup Plan

4.1 Introduction 4-1
4.2 Mitigation Actions by Critical Components 4-2
4.3 Summary 4-14

5 Preparedness Planning for Emergency Response

5.1 Introduction 5-1
5.2 Overview of Marysville Emergency Response Plan 5-1
5.3 Communications 5-5
5.4 Agreements with Other Agencies 5-6
5.5 Summary 5-8

6 Training

6.1 Introduction 6-1
6.2 Training Programs 6-1
6.3 Summary 6-5

Appendix A Emergency Contacts
Appendix B Priority Service Customers and Facility Inspection/Damage Forms
Appendix C Training Resources

Section 1
Overview of Plan

1.1 Introduction

This document presents a response plan for unexpected water supply shortages that may occur as a result of operational disruptions from natural or human-made emergency events. It is imperative that utilities plan for emergency disruptions, in order to be able to quickly restore safe drinking water to customers.

While water utilities cannot plan for every possible emergency, they can prepare reasonable approaches to handling the most probable risks. This plan identifies potential risks to the City's water system, how the event would most likely impact service, identifies measures to take in order to continue to provide or restore service as soon as possible, and proactive measures the City can take to properly prepare for emergencies. Such steps include training, draft water purification notification flyers, priorities for maintaining service, and other important measures. This plan was developed using the AWWA Manual M19, *Emergency Planning for Water Utilities,* as a guideline.

This plan does not address drought related issues as these rarely arise unexpectedly, but occur over a period of time. The City has addressed drought considerations in a separate plan, *The City of Marysville Drought Response Plan*, which was adopted by the City Council in 2001.

1.2 Organization of the Study

This report is organized in a sequential manner that first provides a description of possible hazards, followed by sections that assess the vulnerability of Marysville's water system, by key components, and structural measures that can be implemented to prepare for the probable emergencies. The final sections of the plan address preparedness planning, and training and other non-structural measures that can be taken to prepare for probable hazards. These topics are covered in the following sections:

- Section 2 – Hazard Analysis
- Section 3 – Vulnerability Assessment
- Section 4 – Facility Mitigation, Protection and Backup Plan
- Section 5 – Preparedness Planning for Emergency Response
- Section 6 – Training

Appendices are attached at the end of this report detailing various emergency contacts and forms to be used in preparation for and during response to an incident. These are presented in a format more specific to the water utility, rather than citywide related issues. The City has indicated an interest in maintaining these lists, separate from the lists in the Emergency Response Plan (ERP), since these are water system specific. City staff must enter names and contact numbers which are, for the most part, readily available from various forms in the City's ERP.

1.3 Coordination with Other Emergency Planning Efforts

The City has an extensive city-wide emergency response plan (ERP) in place pertaining to all city functions for emergencies such as those addressed in this plan, both natural and human-caused. This plan focuses primarily on contingency plans if there is a short-term, but immediate reduction in water supply to the system. This plan is intended to be an addition to existing plans, not duplicative. Therefore, references are made to contact lists from the City's Emergency Response Plan for emergency backup assistance, suppliers, contractors, etc. which may be needed in certain emergencies.

It is also important to note that these plans are fluid. As system changes occur or staff changes, updates to the plan must occur, and additional training must be provided to ensure that current staff is familiar with procedures, should an emergency supply situation transpire.

This plan assumes that utility staff assigned to respond in emergencies addressed within this plan are familiar with the following procedures:

- ✓ Safe entry into and operating within confined spaces
- ✓ Safe response to fire
- ✓ Safe response to electrical hazards, including faults and downed wires
- ✓ Safe response to flooding from pump station failures
- ✓ Safe response to flooding from water main breaks

1.4 Summary

Use of this plan should provide the City with essential guidelines needed to meet City goals of providing safe drinking water under emergency circumstances. The next section details the hazards that can lead to reduction in water supply.

Section 2
Hazard Analysis

2.1 Introduction

There are generally two types of hazards that can interrupt supply to water system customers. These are natural and human-caused hazards. This section identifies and describes the various types of hazards that can lead to emergency water shortages or other water system impacts (water quality issues, contamination, etc.). It is important to note that more than one type of hazard can lead to emergency water shortages at once. For example, snow and windstorms can knock out power, which can impact water distribution. Or, fires and power and communication outages can occur as a result of an earthquake. By addressing the probability of each hazard, and how it can impact the City's water system, the City will be more prepared to meet the challenges posed by such hazards. At the end of this section the relative probability of each type of hazard potentially impacting the Marysville water system is provided.

2.2 Natural Emergency Hazards

Within this area there are a number of natural emergencies that could occur. These are described below in general terms, and then the specific potential for their occurrence within the Marysville area is addressed.

2.2.1 Earthquakes

Earthquake impacts occur in a number of different ways. The degree of damage is related to the magnitude of the earthquake, distance from the epicenter (the location of earth's surface directly above the subsurface focus of the earthquake), different types of soil conditions and different types of earthquakes and faults that exist. Luckily, significant research and effort has been made in determining potential fault lines and impact areas. The impacts to a water system are varied depending on the type of earthquake and its effects, as described below.

Faults. A fault rupture is the movement of two land masses along a fault. These land movements generally occur along existing fault lines. There are fault lines within the Puget Sound and Cascade region. Fault lines are sometimes visible from aerial photographs and occasionally at ground level. In addition, they may be mapped by agencies such as the United States Geological Survey (USGS). Many faults, however, have not been mapped and may not be

identified. Any facilities built on or across fault lines are susceptible to structural failure. This can impede water supply as well.

Fault lines surround Marysville. Readily available USGS seismic information indicates that there are at least 3 known fault lines within a 60-mile radius of the city. These include the North Whidbey Island, South Whidbey Island, and Seattle fault lines. Information from the USGS indicates that there could be many other unidentified fault lines along which earthquakes can occur.

Ground shaking. The energy generated by an earthquake radiates out from the fault line, central point, or epicenter like ripples caused by a stone thrown into a pond. The waves cause the ground to shake. The closer to the epicenter, the more violent and vertical the ground shaking, and likewise, the farther from the epicenter, the less impact from the earthquake and the more rolling the ground shaking will be. The energy released from an earthquake produces both vertical and horizontal accelerations that can damage water system components. For example, elevated storage tanks can be susceptible to failure from tipping due to water "sloshing" from the ground movement. Or, a waterline without flexible joints adjoining a concrete structure can be subject to shear force, and failure. While the earthquake epicenter may not occur within city limits, the damage can still be significant, depending on the depth of the movement, distance from the epicenter, and the duration of the earthquake.

The most recent earthquake to occur in this area and cause significant damage was the February 28, 2001 earthquake. Damage was minor for the Richter scale reading of 6.8 because the tremor occurred nearly 30 miles below the earth's surface. The epicenter was in the southern Puget Sound area, near Olympia, Washington.

Liquefaction. This phenomenon occurs when the water particles located in the space between soil particles, gain pressure that overpowers the friction between the soil particles. The result is a water-soil slurry that has reduced shear strength. Damage from such action can include foundation failure, differential settlement, lateral spreading, or floating of underground components. Liquefaction can also result in a loss of slope stability and, therefore, lead to landslides. Soils where this is most likely to occur include loose, sandier soils, particularly with high water content. Fill sites are often subject to liquefaction. This phenomenon transpired in the 1989 San Francisco earthquake where areas built on fill had major foundation and structural failures along with gas line leaks and resultant fires.

Densification and Consolidations. Conversely, some soils can become more dense from the ground shaking of the earthquake. Ground subsidence can occur as a result. Foundation and structural failures can occur and shear forces can impact pipelines.

Landslides. As noted earlier, landslides can occur as a slope loses it shear strength and stability. Typically, earthquake-induced landslides are the result of ground shaking or liquefaction.

Tsunami and Seiche. A tsunami is a tidal wave caused by an earthquake or volcanic explosion. A seiche is an oscillation of the surface of a lake or reservoir due to an earthquake. This phenomenon is similar to the "sloshing" that can occur in an elevated tank, but is transferred directly to the water body from the ground shaking in the surrounding land. A seiche can damage dam inlet and outlet facilities or overtop dams, and lead to dam failure. Tsunamis and seiches are dangerous, high waves. They can also be caused by landslides, resulting from an earthquake. They can cause moderate to severe damage along coastal and shoreline areas.

2.2.2 Volcanic Eruptions

Volcanic activity occurs in the Cascade Range. Most recently, Mt. St. Helen's erupted in 1980. All the volcanic peaks in the Cascades have potential to turn active, although there is no known significant activity currently. Hazards from eruptions can include explosive winds, pyroclastic flows containing hot gases, mudflows, falling rock, floods due to mud and snowmelt, and ash. In the Mt. St. Helen's eruption, mudflows and ash were two of the largest impacts, with the ash spreading throughout the Northwest.

Mt. Baker and Glacier Peak are the nearest volcanoes to Marysville. Both are north of the city. Any glacial melt that would occur as the result of volcanic activity would not impact the city as the flows from the nearest peak, Glacier Peak, would enter the Skagit River which is north of the city and lies in a different basin. In addition, the Sultan River, which supplies 40-50% of the City's water supply through the Marysville/Everett Joint Operating Agreement (JOA) pipeline, has no direct flow or impact from any of the major Cascade Range volcanoes.

2.2.3 Flooding

The Northwest is typically impacted by some level of flooding each year, due to the average rainfall the region typically receives. In addition, as noted above, floods can be caused by dam failure due to earthquakes, volcanic eruption impacts, tsunami and seiches. Rapid snowmelt, particularly when combined with high levels of rainfall, can also cause flooding. Flooding can not only impact facilities directly, it can prevent access for repair and maintenance, and can lead to poor water quality when sources are compromised.

2.2.4 Hurricanes, Tornados and Windstorms

While tornados typically impact areas primarily by the heavy winds, hurricanes and windstorms also bring rains, sometimes hail and other weather patterns. This weather can damage water system components which can in turn, reduce source availability or quality. The impacts of each storm type are briefly described below.

Hurricanes. For a storm to be named a hurricane winds must exceed 70 mph. Winds from hurricanes have been recorded as high as 200 mph. These storms also bring devastating rains as well. Luckily, in the Pacific Northwest, these storms are extremely rare. Hurricanes can be tracked by radar, and therefore warnings can be issued. However, most above ground water system facilities are not built to withstand the forces these winds exert.

Tornados. Tornados devastate anything in the direct path of the funnel. Areas 100 feet from the funnel can be completely safe from damage. Therefore, damage is isolated to a relatively narrow swath. Unfortunately, these storms move in unpredictable patterns and sometimes materialize unexpectedly. However, most of time these storms can also be tracked by radar and warnings provided. Scientists believe winds in tornados reach 300 mph, but have little recorded data because wind gauges can't survive the strength of the winds. These storms also are very uncommon in the Marysville area.

Windstorms. Windstorms are common in the Northwest, including Marysville. The common time of year is the fall, but windstorms have also occurred in mid-summer. These storms come through the area, most often accompanied by rains, sometimes hail and occasionally they are accompanied by electrical storms. Winds of 50 mph or higher can occur. Most often temperatures are mild, but temperatures can drop below freezing as well. (Impacts from electrical storms and freezing conditions are discussed below.)

These storms typically knock out power when trees and limbs fall on power lines. This can impact transmission of water into and through the distribution system. In addition, the storms can impede staff from operating and maintaining the system when fallen trees and debris in the roadways prevent access to areas. For perspective, hundreds of thousands of electricity customers throughout the Puget Sound went without power for days after the Inaugural Day windstorm of 1992 where winds approached 90 mph.

2.2.5 Other Severe Weather (Intense Cold, Ice, Snow and Electrical Storms)

In the Northwest extreme weather is rare. Occasionally snow, freezing rain and ice can prevent maintenance crews from accessing facilities that may need repair or maintenance. This can occasionally impact water system operations, and the ability to perform routine maintenance and operational checks on system components.

The typical impact, caused by heavy snow or ice, is fallen trees and power lines or trees or debris on roadways or onto facilities. Occasionally this area will experience temperatures below freezing for more than 3 days. This can lead to difficulty in operating some facilities; valves and waterline leaks from freezing; and ruptured pipes at private residences causing an increase in demand. These impacts are usually temporary in nature.

Electrical storms have relatively the same impacts due to fallen trees. In extremely dry conditions electrical storms can also lead to fires. However, this situation is less likely to occur in the Marysville area due to lack of brush and forests. Occasionally electrical storms can cause power outages due to electrical strikes on transformers. Power outages can impact source, transmission and treatment facilities without standby or backup power supplies. Outages can also effect the ability to monitor and manage the facilities through the telemetry system.

2.2.6 Mudslides/Landslides

Mudslides and landslides can occur on unstable or steep slopes at anytime, but particularly after extended periods of rainfall or due to earthquakes, as noted above. In Marysville, the areas more prone to landslides include the southeast areas where there are slopes up into the Lake Stevens area. While there are slopes in this section, a review of Snohomish County's landslide history from 1941 through 1993 shows no occurrence of slides in this area. While the potential remains, historically, no slides are recorded. Should slides occur, the typical impact is to lines located within the slope. Breakage or blockage of lines can occur as the support around them gives way, or pulls them down with the surrounding earth.

2.2.7 Forest or Brush Fires

Forest fires can damage watersheds and water system structures. If water supply is used in fighting these fires, supply can be strained. Due to the recent growth of urban development in the Marysville area, this type of threat is less of a hazard within the City's own system, than in previous years. However, the Sultan River Basin has more probability of forest or brush fires. The watershed is a protected area but lightning strikes could occur within the area in summer, with drier conditions. If forested areas burn, sedimentation in the watershed can occur, resulting

in turbidity in this portion of the water supply. The City of Everett manages and treats this water source. The filtration plant is equipped to handle certain levels of turbidity. The City has a complete watershed protection plan and emergency response plan wherein this issue is addressed, thereby reducing the potential impact to the Marysville water system. However, the possibility exists that, should a large forest fire occur within this watershed, Marysville's water supply could be significantly impacted.

2.2.8 Waterborne Disease

Outbreaks of *Giardia* or *Cryptosporidium* are hazards that any surface water system faces. Planned filtration of the Stillaguamish water source will provide required protection according to the USEPA Surface Water Treatment Rule. The Edward Springs supply will not require filtration, and will be able to meet microbial inactivation requirements through disinfection. In the future, additional Cryptosporidium inactivation will likely be required at Edward Springs. Waterborne disease is managed as a low hazard to the system. Routine water treatment, sampling, and analyses are performed in compliance with safe drinking water regulations.

All of the above hazards, with the exception of waterborne disease, can impact transportation, at least partially. This is caused either by damaged roadways or debris in or across roadways. Anytime this occurs, it impacts the ability to repair, maintain, inspect and possibly operate facilities. This in turn, can impact the ability to supply safe drinking water to Marysville's customers.

2.3 Human-Caused Hazards

Along with the hazards described above, there are numerous hazards all water systems face that can be caused by a variety of human activities. Hazards that can impact the ability of a utility to supply safe drinking water are described below.

2.3.1 Hazardous Material Release

The definition used for purposes of this plan includes any chemical that can cause harm to humans through contamination of the water supply. Some chemicals that are used in water systems, such as chlorine, can be hazardous if too large a concentration is obtained. Spills of hazardous materials can occur from pipelines (such as the gas line leak in Bellingham in 1999), any mode of transportation, including ships, boats, airplanes, cars, trucks, or trains. Spills can be liquid, solid or gaseous. The more difficult to manage, and return water supply to normal operations, are typically liquid and gaseous spills. The obvious impact of such a hazard is the potential contamination of the water source.

2.3.2 Structural Fires

Fire can impact a water system in a number of ways. If the fire is at a water system location, such as a pump house or treatment facility, the ability to provide water will be impacted. Key computer control systems can also be affected by fire and require repair before operations can return to normal. In addition, water supplies can be depleted in the case of firefighting efforts for a large fire involving a wide area of the City. Temporary short conserving measures may need to be implemented to meet all priority water consumption needs.

2.3.3 Construction or Transportation Accidents

System components can be, and often are, damaged when construction occurs near facilities. The most typical impact is damage to pipelines when construction is underway nearby. Facilities can also be damaged by transportation accidents. For example, elevated reservoirs or pump stations can be struck by motor vehicles or airplanes. Service can be curtailed if a system component is off-line due to a transportation or construction accident. These impacts are usually short in duration, with repairs usually made within 24 – 48 hours of the incident. Other transportation accident impacts can include restriction of staff being able to access facilities or to arrive to work if major freeways or arterials are closed due to serious accidents or spills. Again, these types of situations are usually handled within at least a 24 hour period, with the roadway made at least partially accessible or detours identified.

2.3.4 Nuclear Power Plant Accidents and Nuclear Explosions

An accident at a nuclear power facility could potentially release airborne radiation, with effects on personnel, water sources, and facilities in the downwind direction. The nearest nuclear facility is at Hanford, in eastern Washington. Usual prevailing winds would not generate an impact to Marysville's water supply.

Another type of potential nuclear hazard is contamination by detonation of nuclear devices at facilities such as Bangor Nuclear Submarine Station on Whidbey Island, or possibly nuclear warheads at Fort Lewis or McCord Air Force Base south of Seattle. While such possibilities are remote, the utility must be prepared to respond to such an emergency.

2.3.5 Computer System Failure or Attack

Computer failure can occur from widespread or isolated electric outages. As noted above, this can impact operation of instrumentation and controls, and ultimately the functioning of facilities. Again, with power out, additional staff resources are required to manage the system manually.

One example of potential computer system failure is the Y2K situation. Agencies responsible for a variety of services upgraded systems in order to avoid errors and possible failure of computer systems.

Another real hazard to any computer systems used to manage, monitor, or maintain records is computer virus attacks. These attacks affect the ability of a system to function temporarily, or can completely wipe out whole systems. These threats are real and unpredictable.

2.3.6 Vandalism, Riots, and Strikes

Vandalism and riots would most likely affect elevated structural facilities, such as pump stations, treatment plants, dams, water towers, and City office buildings. There are a number of measures that can be taken to limit exposure to this type of hazard. Strikes of unionized operations staff can impact water service, but normally management employees can fill in on operational tasks until union issues are resolved. In most cases impacts will be temporary. However, if tensions are high, access to facilities by union employees would need to be restricted to reduce the potential for damage. Riots and strikes could also block access to transportation routes used by water system personnel.

2.3.7 Terrorism

Terrorism is a real threat. Prior to the international terrorist attack of September 11, 2001 on United States soil, this threat was considered less likely than local vandalism impacts. However, the threat of this hazard must be addressed seriously for the potential of supply contamination, or damage to water facilities. While terrorism at a national or international level remains somewhat remote, because of Marysville's size and lack of relative prominence, it is close enough to the Seattle metropolitan area to require preparedness for this type of hazard. Additionally, local terrorism, including "copycat" events, may potentially pose a threat to Marysville. In addition to destruction of facilities, release of chemical or biological agents into the water system is a hazard that should be considered.

2.4 Summary of Hazard Analysis

Given the discussion provided above, of the various types of hazards a water utility must address, an estimate of probability of the various hazards to the City's water system was made. Table 2-1 presents the hazards described above with the estimated probability of occurrence within Marysville's water service area. The estimated probability is a relative probability, and is based on general common knowledge of storm systems and weather patterns, research conducted regarding the City's vulnerability to earthquakes, geological information, landslide data,

pertinent maps of the Marysville area, and EES staff's interpretation of this data. None of the hazards described above are deemed to be of a high probability for the City's water system.
Those hazards that are identified as having a low – moderate or moderate probability of occurring in the Marysville' area are addressed in the next section, along with potential impacts to critical operational components of the system.

Table 2-1
Hazard Table

Type of Hazard	Estimated Probability	Comments
Natural Hazards		
Earthquake		
Fault rupture	Low	
Ground shaking	low – moderate	3.0 – 6.0 typical
Liquefaction	low – moderate	7.0 – 9.0 unlikely
Densification	Low	Alluvial till
Landslide	Low	
Tsunami and seiche	Low	Inland
Volcanic eruptions	low – moderate	Mt. Baker; ash impact from others
Hurricane	very low	
Tornados	very low	
Wind	Moderate	
Floods	low – moderate	Stillaguamish River: 100 year Ebey Slough numerous creeks
Other severe weather		
Lightning	low-moderate	
Snow or ice	Moderate	
Mudslides/Landslides	low	southeast section of service area
Waterborne diseases	low	
Human-Caused Hazards		
Hazardous-material release/spill		
Chlorine	low – moderate	
Other Spill	low – moderate	
Structure fires	moderate	
Construction accidents	moderate	
Transportation accidents		
Road	moderate	
Rail	moderate	
Water	low	
Air	low	
Computer failure or attack	low - moderate	
Vandalism, Riots and Strikes	low – moderate	2001 incident in Sultan
Terrorism	low - moderate	
Nuclear power plant accidents	very low	Hanford nearest site
Nuclear bomb explosions	low	McChord Air Force Base Bangor Naval Submarine Base

Section 3
Vulnerability Assessment

3.1 Introduction

In this section the vulnerability of major components of the City's water system to hazards is addressed. The vulnerability assessment presented is a two-step process. First, key components of the water supply system that could be impacted by the hazards described in the previous section must be identified. Secondly, after each system component, an estimate of the potential impacts if this system component is compromised is described. Acceptable levels of service for the system, from which the impacts are measured are those identified in Chapter 8 of the Comprehensive Plan.

Before beginning the assessment, a general description of the City's system is provided as a reference point for the general public/more casual reader.

3.2 General Water System Description

The City's system serves approximately 16,000 connections, and a population of about 25,315. The service area includes locations within the City and within the Coordinated Water Service Area. (CWSA) and those outside the CWSA. This covers approximately 10 square miles of service area.

The City's water system has numerous types of water sources providing for customer usage. Edwards Springs, four wells, surface water of the Stillaguamish River and Lake Chaplain and the Sultan River (through the City of Everett's water supply) are the various sources. The distribution system includes four pressure zones and six storage tanks. The flexibility of the various types of water sources contributing to the overall water supply undoubtedly enhances the City's ability to respond to various types of service interruptions.

A more detailed system description is provided in Chapter 2 of the Comprehensive Water System Plan.

3.3 Major System Components

To begin this process, an overall, system-wide view was taken. All system components were assessed for each of the hazards rated as "moderate" or "low-moderate" probability discussed in

Table 2-1. For example, hurricanes and tornados are not addressed due to the "low probability" of occurrence. Table 3-1 provides a summary of the City's system and critical components impacted by the various hazards described in Section 2. A vulnerability assessment form from the AWWA manual, *Emergency Planning for Water Utilities*, was used to evaluate eight of the most critical system components. This assisted in assessing overall impacts caused by potential failures. Assessments are based on date of construction, construction materials, descriptions of systems components in the previously completed Comprehensive Water System Plan, descriptions in the City's Emergency Response Plan (ERP), and geographic location. Following this table is a description of the critical water system components and the impacts to the water system if any of these hazards impair, damage or otherwise limit the system components.

3.3.1 Personnel

Aside from access to clean water, personnel is the most important resource for any water system. City crews maintain, operate, and repair facilities that provide water to the customers. Management manages the system and leads emergency efforts. Management can also assist in routine duties when necessary. Personnel safety and access to system components are key to staff ability to carry out their responsibilities. With many of the hazards described above, staff can be injured, or face needs related to their families and homes. Roadways can have blockages from debris, damage caused by flooding, earthquakes or volcanic eruptions and side effects such as mudslides. Or, hazardous spills can close roadways for hours. In these situations, staff access to facilities, or ability to get to work, can be impacted. In addition, vandalism to either the buildings housing facilities, supplies, or vandalism to vehicles can also impede ability to perform routine duties.

In the case of storms causing power outages and roadway blockages, staff will be required to manually operate some system components but may have limited access to them due to road conditions. Depending on access to components, the impact to the system will vary. These situations, with multiple impacts, must be considered in developing preparedness plans, as discussed in Sections 4 and 5.

Table 3-1
Disaster Effects Matrix of Hazards & System Components[1]

System Components - Likely damage, loss, or shortage due to hazards	Earthquake	Volcanic eruptions	Floods	Wind, Snow, & Storms	Mudslides/ Landslides	Waterborne disease	Hazardous material	Structure fire	Construction accidents	Transportation accidents	Computer Viruses	Vandal, riots, strikes	Terrorism	Nuclear Accidents
Administration/operation														
Personnel[2]	■	■	■	■		■		■				■	■	■
Facilities/equipment	■	■	■	■				■	■		■	■	■	■
Records	■		■					■			■		■	■
Source Water[3]														
Surface water														
Stillaguamish Ranney Collector	■	■	■	■		■	■					■	■	■
Lake Chaplain	■	■	■		■	■	■					■	■	■
Groundwater sources														
Edwards Springs	■	■	■	■		■	■					■	■	■
Sunnyside Well #2	■		■	■		■	■					■	■	■
Goodwin Well	■		■	■		■	■					■	■	■
Highway 9 Well	■		■	■		■	■					■	■	■
Treatment[3]														
Facility Structures														
Stillaquamish Trt Plt	■	■	■	■			■	■	■			■	■	■
Chaplain Filt. (Ever.)	■	■	■	■	■		■	■	■			■	■	■
Storage Tanks[3]														
Edward Springs Res.	■	■		■					■	■		■	■	■
Getchell Hill Res.	■	■		■						■		■	■	■
Highway 9 Reservoir	■	■		■						■		■	■	■
Cedarcrest Reservoir	■	■		■						■		■	■	■
Kellog-Marsh Stdpipe	■	■		■						■		■	■	■
Sunnyside Standpipe	■	■		■						■		■	■	■

Table 3-1 (continued)
Disaster Effects Matrix of Hazards & System Components[1]

System Components - Likely damage, loss, or shortage due to hazards	Earthquake	Volcanic Eruptions	Floods	Wind, Snow, & Storms	Mudslides/ Landslides	Waterborne Disease	Hazardous Material	Structure Fire	Construction Accidents	Transportation Accidents	Computer Viruses	Vandal, Riots, Strikes	Terrorism	Nuclear Accidents
Transmission Pipelines[3]														
JOA 30" Pipeline	■		■						■			■	■	
Stillaguamish Line	■		■						■			■	■	
Edward Springs 12"	■		■						■			■	■	
Everett No. 3 Line	■		■						■			■	■	
Pump Stations	■	■	■	■				■	■	■		■		
Distribution														
Watermains, valves	■			■	■				■			■		
Pump or PRV stations	■	■	■	■				■	■	■		■		
Supplies and Parts	■	■	■	■				■				■		
Electric Power														
Substations	■	■	■	■				■	■	■		■	■	
Transmission Lines	■	■	■	■					■	■		■		
Transformers	■	■	■	■				■	■	■		■		
Standby generators			■	■				■	■	■		■		
Transportation														
Roadway infrastructure	■	■	■						■	■			■	
Roadway Blockages	■	■	■	■			■	■	■	■	■	■	■	
Vehicles[3]		■	■	■				■				■		
Maintenance Facilities	■	■	■	■			■	■	■			■	■	
Communications														
Telephone	■	■		■				■	■	■		■	■	■
Two-way radio								■?			■	■	■	
Networks/Email/Records	■	■	■	■	■			■	■		■	■		■
								■			■	■	■	
Instrumentation/Controls														
Telemetry	■	■	■	■	■			■	■		■	■		

1. Low probability events are not included.
2. Items listed could potentially affect a large number of employees simultaneously, and affect City capabilities to provide service.
3. Controls for these components are addressed under "Instrumentation/Controls" at the end of the table.

3.3.2 Source of Supply

Marysville's peak day demand is currently 88 percent of the total installed primary source capacity. Loss of any source of supply for the Marysville system during emergency conditions will result in a decrease in the ability to meet peak day demands. Loss of any one of the four primary sources (Lake Chaplain, Stillaguamish, Edward Springs & Lake Goodwin Well) sources will drop the source capacity to a level below peak day demand levels. Supply capacity will be close to average day demand levels with the loss of the Lake Chaplain source. A loss of any source will result in the need for short-term emergency curtailment of demands and the use of current emergency only sources (Highway 9 well and Sunnyside Well No. 2).

Loss of source could be caused by any number of emergency conditions including contamination, loss of power for treatment and pumping, pump breakdown, or transmission pipeline breakage.

Depending on the source that is lost, portions of the Marysville system will experience the impacts to a greater or lesser degree. For example, if the Lake Chaplain source is lost, the southern portion of the Marysville system will experience greater impacts than the northern portion, although impacts will be felt throughout the entire system.

Edward Springs. This source serves northern service area. Disruption of this source would impact this geographic area.

Stillaguamish Ranney Collector. This source of supply serves the north and eastern portions of the service area.

Lake Chaplain (Everett water). This water source enters the system in the southern portion of the service area, and serves the southern area.

Sunnyside Well #2. This well is used for emergency purposes and serves the southern service area. Loss of this emergency well would only impact the system if other systems, which it supports as a backup supply, were impacted as well.

Lake Goodwin Well. This well serves the northwest section of the service area. It is primarily backup supply to Edward Springs, so by itself, would not have a large impact on the system should it alone fail. There are a few customers served directly by the Lake Goodwin Well.

Highway 9 Well. This well is used for emergency purposes and serves the southern service area. Loss of this emergency well would only impact the system if other systems, which it

supports as a backup supply, were impacted as well. If the Cedarcrest booster station is out of service, the Highway 9 Well is the sole source for the 510 pressure zone.

3.3.3 Treatment

Treatment facilities are required at the Stillaguamish and Edward Springs sources to meet Federal and State Department of Health Drinking Water Standards. A treatment failure could be caused by electrical power shortage, fire, earthquake damage, flooding, vandalism, terrorism, or computer failure or attack. If the treatment system is bypassed, water quality will be impacted. Boil water orders may be required. Although bypassed water will not meet drinking water quality regulations without boiling, water can still be supplied for other domestic uses and fire protection.

Stillaguamish Treatment Plant. This filtration plant is planned for construction in 2002 and 2003. Once completed, it could potentially be impacted by those hazards noted above. Hazardous material spills or chlorine leaks could also occur at the plant, causing a partial or complete shutdown until cleanup is complete. Transportation accidents are possible due to the fact that the primary road leading to Arlington, from the west, is near the facility.

Lake Chaplain Filtration (Everett water). The filtration plant at Lake Chaplain is owned and operated by the City of Everett, and serves a large portion of the Snohomish County population. If this plant were to become inoperable for any reason, it would affect water supply from the JOA pipeline. One of the greater risks to this filtration plant may be flooding, as it sits at the base of the diversion dam. Hazardous material spills or chlorine leaks could also occur at the plant, causing a partial or complete shutdown until cleanup is complete.

Edwards Springs. This water source has chlorination as the disinfection treatment. At this time filtration is not required. Onsite chlorination containers increase the possibility of either higher than acceptable levels of chlorination concentrations in the water supply through spills or system failure, or the possibility of fire. If the disinfection system were not operating properly due to any hazard, this supply would not be available and the impacts noted above, under source of supply, would apply.

3.3.4 Storage Tanks and Reservoirs

Sudden loss of any reservoir will have a distinct impact on the water system. Each reservoir provides unique support to the distribution system. For example, the Highway 9 Reservoir is the highest reservoir in the system. Loss of this reservoir would eliminate all emergency storage in the highest zone and force the demand to be met solely from the Cedarcrest Pump station. This

station was not designed to be operated in this manner. Loss of the Edward Springs reservoir would cut the volume of citywide storage in half.

In addition, sudden loss of water from any of the reservoirs would cause a significant amount of water to run across the surface, flooding structures located near the reservoirs and causing extensive damage to the ground.

3.3.5 Pump Stations

Pump stations in the City of Marysville primarily are used to transport water from one pressure zone to a higher zone. Pump stations that transport water from sources to the system are discussed in Section 3.3.2.

Pump stations are not the sole source of water to any pressure zone; even the highest zone has a well that is capable of providing some source water on an emergency basis. Thus, loss of any one pump station will not have a significant impact on the overall operation of the distribution system. There will be some minor impacts, such as a need to temporarily curtail demand in localized areas or the need to deliver water to a zone through less used and efficient manners (PRVs from upper zones, use of emergency wells, etc).

3.3.6 Transmission Mains

The transmission lines serving Marysville convey treated water from source and treatment facilities to the distribution system in Marysville's service area. These lines include:

- Edwards Springs Pipeline
- Stillaguamish River Pipeline
- JOA 30" Pipeline (receives water from Everett #3 Pipeline)
- Everett #3 Pipeline from Lake Chaplain

An emergency condition interrupting the flow of water through one of these pipelines would have impacts essentially identical to those previously described for disruption of water supply from the City's source facilities. Loss of transmission in any one of these four main transmission lines will bring supply to a level below peak day demand. However, if only one line is disrupted, average day demand can be met, especially if short-term emergency demand reduction actions are implemented.

These impacts would be felt in the same portions of the service area as described previously for the respective sources.

3.3.7 Distribution Lines

Distribution lines have less of a system-wide impact than transmission lines, due to the smaller diameter size pipe and localized areas typically effected by disruption of flow caused by one of the hazards. As noted in Section 2, Marysville is in an area subject to earthquakes. If a large magnitude earthquake occurred with an epicenter near the City, some older lines would likely fail. The City has listed those lines considered susceptible to earthquake damage in the ERP. This topic is further discussed in Section 4, the Mitigation Plan.

Damage to distribution lines can also occur with extended period of freezing temperatures where valves become difficult to operate, and service lines rupture after the freeze and thaw cycle transpires. This will lead to loss of supply through leaks until valves can isolate leaking areas and repairs can occur.

3.3.8 Electric Power

Electrical power is required for operation of the City's water system. It powers the pumps, instrumentation and controls. There is a portable backup generator that can provide power for one source of supply, and manual operation of systems can occur. However, wide spread loss of power would reduce production and transmission. The result and impact would be similar to that described above for loss of supply and transmission, with need for emergency demand reductions and re-routing of supply, depending on which systems are effected. Fire flow would also be reduced in effected areas of supply reduction.

As described earlier, electrical transmission lines can be effected by any of the storm types described in Section 2, by trees or limbs falling on lines and shutting power off in certain areas. Transformers can receive lightening strikes during storms, interrupting service until repairs are made. This would have the same impact as noted immediately above for power outages.

3.3.9 Transportation

Earthquake or floods can effect roadway infrastructure directly, or bridges can be vandalized or damaged through acts of terrorism, or damaged in floods. Any damage in roadways limits staff access to facilities for maintenance and operations, particularly in times of emergencies. Impacts due to hazards of this nature cannot be easily quantified, except to note there is potential limitation to facility access if this type of emergency occurs. Additionally, roadway blockages caused by storms can limit access to system facilities and can impede system operations.

Vehicles can be effected by ash from volcanic eruptions, floods, fire, vandalism, and debris falling during storms. The same impact occurs, where some limited access to system facilities

can occur. However, alternative transportation can be obtained. Therefore, impact in this area is more manageable and less severe to service and system operation.

The location of maintenance facilities, where vehicles and supplies are stored is important in evaluating vulnerability. The Marysville maintenance facility is located near the Ebey Slough. Hazards most likely to impact the facilities and access to supplies include structural fire, vandalism, terrorism, storms, flooding, and earthquakes. The water system can operate independent of this facility except that telemetry could be impacted. This in turn, could result in the need for manual adjustment of system components for flow. However, access to supplies for repair and maintenance could be temporarily limited by any of the noted hazards. Hazardous material spills also have potential to occur at this site, which could also temporarily limit access to information and supplies.

3.3.10 Communications and Records

Impacts to communications are similar to those for electrical power systems. Communication wires for telephone can receive storm damage. Today, with cell phones, two-way radio and email, other modes of communication limit the impacts of any one system from most of the hazards noted above. However, if a large storm or earthquake occurs, and causes multiple impacts (mudslides, flooding, communications line damage) or multiple hazards occur at once (a computer virus affecting email and a storm affecting telephone communications, including cell phones) the impacts could be greater. In this case, staff resources could be affected because it could require reporting in person to a central location to share information about facility operational status in order to manage the system properly. However, the City has a radio system. As long as the infrastructure for this communication system is not damaged, this will provide for communication regarding system facilities.

The City's radio system's transmitter is located at City Hall. This location reduces exposure to flooding potential. There is also increased security at this location at night, therefore exposure to vandalism and terrorism is reduced as well.

If facilities containing records are damaged, records may also be damaged or lost. In most cases there would be little impact relating to supply of safe drinking water. The same types of hazards as those noted above for transportation would apply to records.

One other component in communication are the computer networks that provide internal and external communication as well as maintaining continuity in the control system. These systems are susceptible to failure from power outages caused by any of the hazards, but more recently a new and real threat is computer attacks from viruses. Viruses can limit access to system information on one or all connected computers. If the virus spreads throughout the system, it

could prevent use of the system until system components are repaired or replaced. The measures the City has in place to prevent this type of impact is discussed in the next section.

3.3.11 Instrumentation and Controls

Instrumentation and controls are essential to efficient operation of the water system. While system components can operate when the telemetry system is off-line for any of the reasons described above, manual operation and management is required. This takes additional staff resources to safely and properly manage the system. In some cases, it may be necessary to use alternate modes of operation to accommodate such outages.

3.4 Summary

This section of the water shortage response plan has identified vulnerability of Marysville's water system to those hazards noted in Section 2 as either low-moderate or moderate in probability of occurrence. Critical system components and impacts of their failure were identified, as well as general impacts from hazard generated emergencies. The next section presents structural mitigation measures the City can take in proactively preparing for these potential hazards and the impacts caused by emergency situations they generate.

Section 4
Facility Mitigation, Protection and Backup Plan

4.1 Introduction

A mitigation plan lays out various measures the City can take to ensure the safety and continuous operation of the water system. In this section actions are described that can be taken proactively to aid the City in minimizing impacts to the City's system due to vulnerabilities in the system from hazards noted earlier. A mitigation plan includes three elements: prevention, protection, and backup actions. Prevention of many of the hazards described is virtually impossible. Earthquakes occur with little warning. Occasionally 24-hour notice may be given for severe weather patterns as they develop, including flooding. Then emergency response measures such as sand bagging can take place. The City's Emergency Response Plan identifies these specific measures that can be taken for each type of hazard generated emergency. Protective measures are those actions that can be taken proactively, prior to the hazard, to minimize potential damage. Protective measures of critical components can be quantified. Suggested protective measures are identified below. Lastly, if a critical component is lost, or temporarily out of service, the provisions the City can take to provide backup supplies, while repairs are made, are another important element of the mitigation plan.

The discussion below includes mitigation actions for facilities in general and specifically for the critical components that were listed in the previous section. This section addresses actions of a more structural nature. This section is organized in the same format as Section 3 and the Disaster Matrix, to provide continuity for the reader. Training programs, resources, and personnel related issues, which are another form of water system mitigation, are presented in Section 6.

Again, it is important to note that the City has a separate Emergency Response Plan (ERP) that contains detailed information regarding emergency contacts, contacts at surrounding jurisdictions, entities with which the utility maintains interties, and specific address location information for facilities. That information is an important resource to this plan and is referenced as necessary. In addition, within the ERP there has been effort made in evaluating critical site conditions. However, further analyses will undoubtedly put the City in a better position for providing safe drinking water during emergencies. The descriptions below have identified studies, field inspections and other measures that can be taken in order for the City to minimize potential threats from any of the noted hazards.

4.2 Mitigation Actions by Critical Components

There are many critical components to continuous operation of a water system. Eight (8) facilities have been identified as most critical to water system operations. These components are:

- Edward Springs and Edward Springs Reservoir
- Stillaguamish Ranney Collector
- Stillaguamish Treatment Plant
- JOA Pipeline and associated Everett water supply
- Telemetry System
- Getchell Hill Reservoir
- Cedarcrest Reservoir
- Highway 9 Reservoir

The components of the water system listed below are listed in relative order of priority. Within each section below, the various specific critical components are listed in an order of magnitude of importance. For example, storage tanks with larger capacity are listed first. This prioritization is used in case there are structural actions for the City to take to limit exposure to hazard vulnerabilities. Listing in this priority order should assist in prioritizing those structural actions or projects.

The discussion presented below is based upon verbal and written information from City staff regarding the facilities. On-site inspections of facilities were not conducted as part of this assessment.

4.2.1 Source of Supply

Source of supply is the most important element in any water system. The City's water supply includes ground and surface water sources. The sources of supply are listed in order of importance.

Edward Springs (supply, wells, reservoir)

Given the hazards identified in Section 3 that could impact operations for Edwards Springs supply, wells and reservoir, this section turns to mitigation measures necessary to prevent and minimize disruption in operations. The system consists of an underground system collecting water from the springs. This area is approximately ¼ mile west of the reservoir. The water flows from the collection system to a screen house facility and is conveyed by gravity to the

reservoir through a 12-inch diameter inlet. There are also three wells (wells 1, 2 and 3) that are used to provide backup supply to the reservoir when necessary.

Power Outages. For any of the hazards that could lead to emergencies, power outage is one result. This system operates with gravity flow, therefore, water will flow through the collectors in a power outage. In the case of a regional power outage, the gravity flow reservoir would be used. If reservoir levels reached a critical point, a portable generator could be temporarily used here to operate wells 1 &2 and the chlorine room together, or well 3 alone, until the level of the reservoir was restored to necessary levels. The City currently has one trailer-mounted generator to provide backup power in the case of a power outage. However, City staff has indicated that the wastewater treatment plant has priority for this backup power supply. A permanent generator set is planned for upgrades to this facility. This will help to alleviate multiple demands on the portable generator and provide reliable backup power to this important water source.

In addition, if telemetry were down, due to power outages or a computer system virus, the reservoir would require manual operation, with staff monitoring the reservoir level and temporarily using the portable generator as noted above. There are ample staff familiar with the facility to ensure there would be someone available to manually monitor and operate this facility.

Fire. This is the City's primary source that is susceptible to a structural fire hazard. It also has low to moderate exposure to a forest fire. If a major forest fire occurred (most likely to occur in August or September, being the driest time of the year and therefore peak water demand season), the well houses, which are wooden structures, could possibly burn. There are no sprinkler systems in place. One measure to take is watering the well houses to prevent the fire. If a structural fire occurred it would prevent operation of the pumps, due to destruction of wiring in the walls.

One measure the City may consider for the future is replacement of the wooden structures. This is a low priority project, as there are more pressing issues in supply, treatment, and distribution and there are a variety of backup supplies, as noted below.

Security. This critical component is partially fenced with a locked security gate on both roads to the collector area. It is, however, susceptible to intrusion through private property and some access through the roads. There are intrusion alerts through the telemetry system on two of the key components here. However, there appears to be some vulnerability. Additional fencing and intruder alerts or alarms on the well houses and reservoir would be beneficial and should be considered during the upgrades to this facility.

Backup Supply. The backup supplies to Edward Springs include the Edward Springs reservoir, Stillaguamish supply, Seven Lakes Water District and the Lake Goodwin Well. If there were

significant forest fires that lead to a well house fire, there could be some water quality issues with Lake Goodwin water. In that case, water quality alerts or other measures would be necessary. If Lake Goodwin were not available, due to other emergency conditions, the Stillaguamish source can handle the system, provided turbidity is low. The Everett supply can also be used for backup but will result in lower pressure.

Stillaguamish Ranney Collector

Given the hazards identified in Section 3 that could impact operations for the Stillaguamish supply, this section turns to mitigation measures necessary to prevent and minimize disruption in operations. The system consists of two 100 horsepower pumps located in a 35-foot deep caisson buried in the riverbed. Seven screened 10-inch collector lines extend out from the caisson bottom. Subsurface water present in the riverbed gravel is screened through the collectors and flows, by gravity, to the caisson pumps where it is then pumped to a chlorine contact facility on shore and into the distribution system.

Power Outages. For any of the hazards that could lead to emergencies, power outage is one result. A new portable generator set is a planned capital improvement for spring 2002. This will address backup power supply to this facility in the case of a power outage. However, as noted above, the wastewater treatment facilities also have power backup requirements. Several of the wastewater pump houses are supplied with backup generators. Therefore, this additional portable generator will ease demand on the other portable generator. City staff will have to prioritize usage on an as needed basis during emergencies.

With telemetry down, due to power outages or other emergencies, the facility must be operated manually, with staff turning the pumps on manually, and off once the reservoir is full. There are ample staff familiar with the facility to ensure there would be someone available to operate this facility.

Floods. The primary potential hazard that has mitigation potential is flooding. The electrical and chlorination equipment are presently located in the flood plain. During the filtration plant construction, the electrical and chlorination equipment will be relocated. While not entirely out of flooding danger, the vulnerability will be reduced.

Security. There is a 24-hour guard at this site. In addition, there is a 3 foot fence and the vaults are locked. Access to the supply is difficult for intruders. There is an intrusion alert on the electricity vault. No other alerts exist at the site. During the construction of the filtration plant, other alerts and alarms for intrusions should be considered.

Backup Supply. Backup supply for this source of supply can be supplied from most of the other sources in the City, including Edward Springs, Lake Goodwin, Everett water, and supply through the Arlington intertie. In addition, the booster pump station at Edward Springs can be used to provide added fire flow.

JOA Pipeline Associated with Everett Water Supply (Lake Chaplain)

The City is not responsible for this supply source, and cannot mitigate many of the hazards that could impact it. However, the JOA 30" pipeline delivers more than 50% of the City's water supply and supplies several other surrounding utility. Therefore, it is critical to normal operations. The pipeline has cathodic protection and is welded pipe. The cathodic protection reduces the potential of a watermain break due to corrosion. The welded joints reduce vulnerability to damage in minor to moderate earthquakes. There are few improvements that are required for the facility at this time.

Power Outages. The JOA pipeline is gravity operated, so power outages do not impact water flow. However, telemetry does operate some of the valves. In case of a power outage these can function with battery backup or be locked into position to maintain flow.

Security. Access to the pipeline is necessary for both Marysville and Everett. Therefore, vaults have not been locked in the past. The pipeline is vulnerable to intrusion by a person with the proper tools, fittings and knowledge of the line. The City indicated that there were feasible improvements that could be considered to provide any further protection to intrusion. There are key lock systems or other locking devices that could be considered, if deemed necessary. Keys can be provided to appropriate maintenance and management personnel for both entities, providing access to both parties, but security from intruders. However, this mitigation measure is of a lower priority for the City at this time.

Backup Supply. Therefore a number of alternate operation modes that are put into place as backup to this system. One is the Highway 9 well. Unfortunately, if the Everett water supply were down for an extended time, when there was also a power outage, this supply would not be available because Highway 9 well is not equipped to operate using a generator. This may be an improvement for the City to consider.

Lake Goodwin Well and Standpipe

Lake Goodwin well is not one of the eight critical components to the City's system. However, as backup supply to Edward Springs, it can play a key role in water supply during emergencies. Additionally, there are the 20 customers that receive their water source directly from Lake Goodwin. Therefore, it is addressed within this section.

The primary issue at this facility is the stabilizing system for the standpipe. The trees, to which the tank is secured, have died and been topped. There is currently an improvement under design to address the stabilizing issue, which is needed primarily in case of earthquake or extreme winds and weather. As part of this project the City may choose to design a screening system for the standpipe. This is needed to meet water quality requirements. This would only be necessary if it is determined that the standpipe will stay in operation for some time. The City is also considering construction of a new reservoir and pressure zone to serve the east side of Edward Springs (the 20 or so customers currently served by Lake Goodwin). Another option is to use the booster pump station at Edward Springs to pump to a new standpipe. Once the project is designed and constructed, the ERP facility description must be updated.

Power Outage. The primary impact of a power outage would be to the 20 customers supplied directly from this source. In extreme conditions, a water truck can supply these customers, provided the City can access water at one of the other sources.

Security. There are no intruder alerts or alarms at this facility. However, due to the close proximity of housing, intrusion may be less likely.

Backup Supply. Lake Goodwin provides backup supply to Edward Springs supply when it is down. There are the 20 or so customers directly dependent upon Lake Goodwin wells for their water. In the case of this source being down, these customers can temporarily be served by a water truck and there is also an intertie with Seven Lakes Water District.

In addition to the sources described above, the City has secured a number of agreements with local jurisdictions for emergency water supply and assistance, should a hazard impact one of the City's sources. These arrangements are described below.

Agreements with Other Agencies

While the City strives to be sole provider of water services to its customers, responsible management of the utility requires that the City maintain agreements with local entities that can provide backup services and assistance in the case of hazard generated emergencies. The City's water utility system is not reliant upon these agreements for operations, but for backup assistance during emergencies, when needed. There are two types of agreements the City maintains. First, there are Mutual Aid Agreements, where entities agree to provide assistance to one another, as requested, and to the extent possible.

Second, intertie agreements are maintained with adjoining jurisdictions with which the City maintains a physical intertie with their water system. This allows for backup supply sources,

when needed in response to emergencies. The City has seven interties with four different entities that provide for supply to various pressure zones in the City's system.

It is important that these agreements are maintained current, contact names and numbers updated as necessary, and that information correspondingly be updated within the ERP. Whenever the City anticipates a benefit from an additional intertie with another entity, this should be considered. The more backup supply sources that are available, the more flexible the system is in response to various hazards, and the sooner normal operations can be restored.

Both the Mutual Aid Agreements and the intertie agreements are further detailed in Section 5, Preparedness Planning for Emergency Response.

4.2.2 Treatment

As noted earlier, there is a filtration plant planned for the Stillaguamish supply, to be operational by the end of 2003. There is currently chlorination treatment at Edward Springs. The Everett supply has its own filtration plant.

Stillaguamish Treatment Plant

This section turns to mitigation measures necessary to prevent and minimize disruption in operations of the proposed Stillaguamish Treatment Plant.

Power Outages. For any of the hazards that could lead to emergencies, power outage is one result. A new portable generator set is planned with construction of the new treatment plant. This will address backup power supply to this facility in the case of a power outage. This emergency generator will be used solely for the treatment plant and will not be shared with the wastewater facilities as with the portable generators.

With telemetry down, due to power outages or other emergencies, the facility must be operated manually. There are ample staff familiar with the facility to ensure there would be someone available to operate this facility.

Floods. The primary potential hazard that has mitigation potential is flooding. The new facility will not be located within the flood plain.

Security. There will be staff at this site during normal working hours. In addition, there will be a 6-foot fence. Access to the building will be difficult for intruders. There will be an intrusion alert on the building when it is not staffed. No other alerts exist at the site.

Backup Supply. Backup supply for this source of supply if the treatment plant is down can be supplied from most of the other sources in the City, including Edward Springs, Lake Goodwin, Everett water, and supply through the Arlington intertie.

Lake Chaplain Filtration (Everett water)

Again, the City is not responsible for this facility. Therefore, mitigation measures by the City are not appropriate for this specific facility. If there is a failure at this treatment facility, the City can shut off the Everett supply and use backup wells and reservoirs for a period of time. In addition, if it becomes necessary to use the Everett supply, the City would follow the instructions given by Everett (alerting customers to the need for boiling water or other necessary precautions).

4.2.3 Storage Tanks and Reservoirs

Mitigation measures for the City's four primary storage tanks are discussed below. The storage tanks are listed in order of priority, determined by their capacity.

Getchell Hill Reservoir – 6 million gallon capacity

This reservoir is a relatively new facility. It has been built to current seismic standards and has low flooding and intrusion vulnerability. Little is needed in the way of mitigation at this facility. Water enters the reservoir from the Everett pipeline (JOA) without pumping. This facility has telemetry for operations and monitoring of reservoir levels. In case of power outages, the reservoir level can be manually checked on a daily basis. One of the portable generators could be used to restore water levels in the reservoir, from other sources, if the JOA pipeline or Everett supply are not available. Conversely, the Everett supply can bypass the reservoir, if the reservoir is not operational but the supply is not impacted by the emergency.

Security. The facility is surrounded by a 6-foot chain link fence. There are locked vaults. Access hatches to the reservoir are also locked. The control and wash down vaults and access hatches are also supplied with intruder alerts.

Edward Springs Reservoir – 6 million gallon capacity

This facility was addressed under the Edward Springs source of supply subsection above.

Cedarcrest Reservoir – 3.5 million gallon capacity

This facility is used primarily for water storage in the 170 pressure zone. The Cedarcrest pump station uses this reservoir as supply to offset the need to pump from the distribution system. This reservoir gravity feeds into the 170 pressure zone in the distribution system.

Power Outage. The pump at this facility is used to pump to the Highway 9 Reservoir. In the case of a power outage, this system cannot be operated with one of the portable generators. The City may want to consider retrofitting this pump house for the portable generator. Without power (and telemetry) the reservoir level needs to be monitored daily and the pump station would not be able to operate.

Security. This facility is surrounded by a 6 foot chain link fence. The access hatches are locked. There is also an intruder alert on the pump house. This facility was characterized by City staff as more vulnerable to bio-chemical assaults. Further security measures to minimize bio-hazards should be considered.

Backup. This facility can be backed up by the JOA and Highway 9 Well. However, this would result in lower pressure in the 510 zone.

Highway 9 Reservoir – 1.8 million gallon capacity

This facility is the only reservoir for the 510 zone. (The well is used for emergency backup only.) Mitigation characteristics and discussion are similar to those of the Cedarcrest reservoir, as presented below.

Power Outage. The pump at the Cedarcrest facility is used to pump to this reservoir. In the case of a power outage, the reservoir level would require monitoring if manual pumping were needed from the Cedarcrest pump house. As noted earlier, the City may want to consider retrofitting the Cedarcrest pump house for the portable generator for pumping to this reservoir as well.

Security. This facility is also surrounded by a 6 foot chain link fence and has locked access hatches. There is also an intruder alert on the pump house and abandoned radio building. No further security measures are necessary at this time.

Backup. Everett water is the backup for this facility. However, lower pressure would result. Also, in extreme emergencies, the Highway 9 well can be used, but would require power. A retrofit for generator operation of the well is an improvement for the City to consider.

4.2.4 Transmission Mains

The most significant transmission line, the JOA pipeline, was addressed previously, under the source of supply subsection. There are numerous other lines that the City has noted in the ERP for inspection in case of earthquake. Most of these line locations are river or creek crossings or on steep slopes. While those conditions are not optimal, they are necessary to provide service to all locations within the City's service area. Replacement projects are not necessarily feasible nor practical. Therefore, maintaining a log of those areas requiring inspection due to susceptibility to failure from earthquake or landslide is the best management practice available to the City.

Some of the other significant transmission lines are noted below.

Stillaguamish Line

This line will supply the new treatment plant once it is completed. It is ductile iron and is vertical to reach 198th Street. With those conditions, it is susceptible to failure in landslides. However, the City does not have any plans within the next twenty years for replacement. It is very deep in some areas, which helps prevent earthquake failure, and crosses wetlands. When replacement does become necessary, it will be costly. One mitigation measure would be to determine if hill holders (structural retaining blocks) are in place. If not, determination of their ability to add any level of landslide/failure prevention to the facility should be made. If appropriate, this alteration may be appropriate.

Everett Pipelines No. 2 and 3

These pipelines connect the Everett water supply to the JOA pipeline. They are not City facilities. According to the City's ERP, they are inspected for damage following earthquakes and landslides.

Edwards Springs 12" Line

This pipeline was built in the 1940's. The material is asbestos cement. It is susceptible to failure under high pressure and earthquake. This line is being considered for replacement. Plans are not yet developed.

4.2.5 Distribution Lines

As with the transmission lines, there are distribution lines that are also susceptible to earthquake and landslide damage. These are also noted in the City's ERP for inspection after either of these

hazards. Some will be replaced over time. However, there is no specific mitigation planned to reduce this potential vulnerability due to other more important priorities.

One issue, which arose as part of this study, is security of valves in vaults. Assessment of accessibility to intrusion could be performed. At the same time, the City can verify that heat tape is present and operational at all inspected valve locations, to minimize potential damage caused by freezing.

4.2.6 Electric Power

As stated above, there are several facilities within the City's water system that require power to operate and are not currently equipped to operate using the portable generator. In addition, there are numerous demands placed on the portable generators when there is a power outage. These facilities include the Cedarcrest pump station (which pumps to the Highway 9 reservoir), the Lake Goodwin well, and Stillaguamish well, and the Highway 9 emergency well. The Stillaguamish well will be retrofitted as part of the filtration plant project. However the remaining facilities are not currently slated for any retrofitting.

The City may want to consider retrofitting these facilities in the following priority order

- Cedarcrest Pump Station
- Lake Goodwin well
- Highway 9 well

There may be future operational changes that will change this priority listing.

Additionally, the City may want to consider a third portable generator. With both water and wastewater facilities requiring the generators for backup power, and with the addition of new facilities in both utilities (the Stillaguamish filtration plant and the wastewater treatment plant upgrades) additional power will be required. It may be necessary, within a few years, to acquire a third portable generator for emergency operations.

4.2.7 Transportation

Roadway Infrastructure and Roadway Blockage

Roadway infrastructure can be heavily impacted by many of the noted hazards, preventing access to facilities. It is impossible to prevent the hazards from occurring. The primary backup measure the City can take in this case is to ensure there are at least two alternative access routes

noted under the facilities descriptions within the ERP "System Component" section. This will provide all emergency responders with the critical information to be able to access the facilities.

If roadways are heavily impacted by a hazard, it may require staff to access the facility and remain there for long shifts at facilities requiring manual operation. This will be dependent on the extent of roadway damage and blockage. At such facilities, provisions should be stored, and periodically refreshed.

Maintenance Facilities and Vehicles

There are a number of hazards that could impact these facilities. However, aside from sand bagging for floods, and moving vehicles, there is little mitigation that is possible to protect against most of the hazards to which these facilities are vulnerable.
One mitigation measure the City could take would be to fence the area in order to reduce the risk of vandalism, terrorism, and slightly reduce transportation accidental hazards. However, given other regulatory driven needs of the system, such a project would rank low in priority. There would also be aesthetic, public access and operational issues to consider before such a security fencing project could move forward.

4.2.8 Communications and Records

There are various forms of communication, internally and outside of the City, requiring systems to provide the connection, or link, to the other party. In addition, various types of important data, both in hard copy and electronic records and data, are stored at numerous City facilities.
Systems providing communication links, and various forms of records for the water utility are discussed below.

Telephone

There is little the City can do proactively to mitigate against loss of telephone service during emergencies except to have a reliable backup communication system.

Two-way radio

The backup system is the City's radio system. The City's current system is the Nextel two-way radio communication system. During the last emergency that the City experienced (the February 28, 2000 earthquake) this radio system failed due to the entire system being overloaded. The City's backup system then was the older radio system. This operated well. However, only about 60% of City vehicles are equipped with the older radio system.

Due the recent terrorist attacks, the telecommunication industry is considering measures necessary to ensure provision of emergency access, within certain communication devices, to emergency management respondents and 911 calls only during actual emergencies. Once these issues are ironed out, reliance upon the old radio system may lessen. However meanwhile, it may be prudent to provide most vehicles with equipment necessary to operate the older, backup radio system, given the current difficulties in radio frequency accessibility.

Records

The City stores originals of hanging files, flat files, and as-built drawings of facilities on the 2nd floor of the maintenance facility building. This would protect these documents from flooding hazard. Copies are stored in the vault on the 1st floor, which protects them from structural fire hazards.

One measure the City can take to ensure against loss of data and records from various hazards is to develop a records backup procedure and verify that it is followed. Storing back up copies of key data and facility as-builts at an alternate location is recommended.

Computer Networks and Email

The City's computer system is networked and there is extensive use of email for communication purposes. The City must be vigilant in maintaining appropriate virus protection measures. These need to be updated weekly, and more often when necessary. The network and personal workstations must be scanned at least once per week for any hidden viruses that can arrive through email. There should be appropriate firewalls in place to prevent viruses from spreading to key elements of the City's network, should one enter the system. Many of these provisions are in place. The City should periodically review and update the protections and procedures and ensure that they are being implemented.

As noted above, one safety measure and fallback plan is to have electronic records backed up on tapes or other media, and located in an alternate location. If a hazard disrupts or destroys the originals, the backup will still be available.

4.2.9 Instrumentation and Controls – Telemetry

Mitigations measures for the telemetry systems of most of the City's system under various emergencies are addressed in each section on critical facilities. If the telemetry at a facility were damaged in a flood or fire, repairs would be required along with repairs to the facility. The impacts of an emergency described below relate primarily to power outages. This section also addresses issues of a security nature in which telemetry system improvements may provide the

City's system with added prevention and protection to reduce or minimize system exposure to intrusion and/or contamination.

The City's telemetry system is expanding as new facilities are constructed and brought on-line. As capital improvements listed in the City's 6-year capital improvement plan are implemented, more of the key facilities will be operated or monitored using telemetry. This improves efficiency during normal operations, but requires staff to maintain knowledge of manual operations in case of power outages.

It was noted in Chapter 2 of the Water System Comprehensive Plan, that the following areas have intrusion alert as part of the telemetry controls:

- Getchell Reservoir
- Stillaguamish System
- Cedarcrest Station
- Highway 9 System
- Tulalip 88th Street Intertie
- Snohomish County PUD Intertie (at Soperwood)

It is recommended that all of the critical facilities identified in the list above, be equipped with automatic intruder detection devices. This would include the Edward Springs system, other interties, pump stations not currently covered, and any valves or vaults considered to be particularly vulnerable to intrusion. This is an important measure to take to provide maximum security and protection of the water supply. There may be federal grant funding for this type of activity in the near future.

As of Fall 2001, the City is inspecting key facilities 3 times each day. Maintenance staff carry out these inspections during the day, with surveillance provided by the police department at night. This procedure can provide security if there is a power outage, preventing intruder alert systems from operating. Additionally, during utility staff inspections monitoring of the facility can be completed, insuring reservoir levels are adequate and other critical system functions are within acceptable operating measures.

4.3 Summary

This section has summarized the physical, primarily structural, mitigation actions the City can take to reduce the impact of hazards on critical components of the water system. The water system resources have been listed in priority order to facilitate prioritization of any of the recommended improvements.

Section 5
Preparedness Planning for Emergency Response

5.1 Introduction

The purpose of preparedness planning is to be prepared for any type of emergency that may impact water system operations as a result of a natural or human-caused hazard. This ensures that the City can maintain or return services to fully operational at the soonest possible opportunity. This section focuses primarily on the City's existing Emergency Response Plan (ERP), as it details many of the steps necessary to follow in case one of the hazards identified in previous sections impacts water utility services. The ERP is a planning document for response to city-wide emergency situations. The focus of this section will be only on response to water system emergencies.

5.2 Overview of Marysville Emergency Response Plan

The City's ERP was established to provide guidelines for City personnel to follow in case of an emergency. The purpose of the plan is to protect life, health, and property and maintain health and safety services to the maximum extent possible. The actions identified within the Plan are intended first to protect life and property, and also to minimize damage as much as possible. Then the focus shifts to returning impacted services to full operations as soon as possible.

The City's Emergency Response Plan covers the following topics:

- Actions measures to take in case of the following emergencies
  - Earthquakes
  - Volcanoes
  - Watermain breaks of major transmission lines
  - Flood
  - Loss of supply in any one of the critical water sources
  - Hazardous material spill
  - Major fire event
  - Sever Storm and Power Outage
  - Train derailment
- Lists priority personnel for response
- Identifies rank of City officers to take command during emergencies
- Provides name, address, phone numbers of all key personnel, contractors and suppliers
- Provides contact name and phone numbers of adjacent water utilities
- Lists available equipment during emergencies
- Location of Chlorine stations and equipment

The ERP also provides emergency response steps for other types of emergencies that do not pertain specifically to the water system.

City officials, as designated within the City's ERP, determine when a situation is deemed an emergency. Once that determination is made, the Emergency Operations Center (EOC) is activated. Activation of the EOC, in turn, activates use of the ERP procedures. The following discussion details eight essential steps in effective response to emergencies. These steps are noted in the AWWA manual *Emergency Planning for Water Utilities*. They are also, for the most part, reflected in the priorities as stated in the City's ERP.

5.2.1 Commanding Officer Determines Severity of the Emergency

The EOC is either activated partially or fully, depending on the extent of damage and impact of the emergency. This is determined by the highest ranking EOC officer, or City officer, available to make the decision when an emergency arises. Priority ranking of City officials is provided within the ERP. The City carefully schedules time off for management staff to ensure there is always more than one key manager available in case of emergencies.

5.2.2 Provide Safety of Personnel and Citizens, Protect Lives

The ERP stipulates the order and priority under which actions should be taken under emergency conditions. Essentially, life threatening situations are addressed first. Then situations in which personnel or citizens are injured or the potential for injury is high are addressed. Attention must be paid to priority water service customers. These would be customers on dialysis, hospitals, and other customers where lack of water can pose a potentially life threatening situation. Appendix B provides a form for the City to use in identifying these customers by address. This list should be updated periodically. Then, when an emergency occurs, those City staff handling this aspect of the response can utilize the list of priority locations for water service. Priority for addressing these customers should be added to the step by step procedures documented in the ERP, that the City takes when water supply is lost.

5.2.3 Reduce Potential for Further Injuries or Damage

Once the above mentioned priorities have been addressed, the ERP states the priority is to minimize further injury and property damage. The steps to follow within the ERP, for response to emergencies caused by any of the hazards described within this report reflect these priorities.

5.2.4 Perform Emergency Repairs Based on Priority to Return to Safe and Full Service

The next step in emergency response is to return essential services and facilities to service. This includes providing backup water supply to the affected areas. The ERP lists measures to take to engage backup water supply for the hazards addressed in this plan. This step is followed by repair of damage caused by the hazard.

5.2.5 Recovery – Return to Normal Service Levels

Once the immediate hazardous conditions have been handled in the above priority order, steps are taken to return to full service and normal operating levels.

In the case of major water supply interruptions, costs of repair and recovery may be large. Sources may need to be replaced if major contamination has occurred and cannot be mitigated. If repair and replacement costs are large, it will be necessary to evaluate utility's rates and possibly implement an emergency surcharge to cover the costs of recovery. Damage reports should be collated and reviewed for any possible cost recovery available through insurance or outside funding sources.

5.2.6 Evaluate Response and Preparedness Plan

The ERP must be continually updated as conditions, staff and system components change. When a hazard generated emergency has occurred, the conditions and responses should be documented for further evaluation. Forms provided in Appendix B should be used during the emergency and should be kept as documentation of response and conditions. The data collected on these forms provides the basis for the City to evaluate emergency response to particular emergencies. This data also often is the basis for any cost recovery available through the Federal Emergency Management Assistance (FEMA) Program or other possible recovery funding sources.

The City can learn from each emergency situation and improve on response procedures and actions based upon documented results. Once the crisis has passed and services have returned to normal operating levels, a meeting to review the emergency response should be conducted. This meeting should include management positions as well as other staff involved in the response. Ideas can be generated about what worked, what didn't, and what will be a better way to handle problem situations for the next emergency. Determination can be made by upper management whether a simulation of the emergency, or training drill, should be conducted, in order to improve response in the future.

5.2.7 Revise Plan as Necessary

As noted above, any changes to the plan, necessary from actual emergency conditions and responses should be made soon after the emergency has occurred. Updates to this Plan must also be made when a change in staff occurs or a change to the system is completed.

A staff person responsible for this updating process should be designated. In addition, the most efficient approach to updating can be accomplished by designating one copy the official copy. Then, at least one copy can be manually updated throughout the course of the year. Once per year all the revisions noted in this primary copy can be collated into a document containing proposed revisions to this Plan. Those changes should be circulated to those management positions with responsibilities during emergency conditions to ensure that all necessary changes have been included. Official updates should be made to any sections of the Plan, including appendices, which have changed. All appendices should be reviewed, staff lists updated, names and contact numbers confirmed for accuracy, and corrected as necessary. Updated copies of any changed sections and appendices must be distributed to all holders of copies of the Plan.

Upon review of the ERP and during development of this plan, it became apparent that there are several areas in the ERP requiring changes, as well as areas in the Appendices of this plan, in order to develop a comprehensive emergency response document for the City's water system.

Due to the terrorist attack on the United States on September 11, 2001, there is a renewed emphasis on security, especially for life critical services, such as water and power. It will be prudent for the City to update their ERP accordingly. It should be noted that the City is currently developing a new section for the ERP to address terrorism and measures to take in case of attacks.

Those areas, which should be amended in the ERP, from the perspective of having comprehensive documentation of the City's water system and emergencies procedures, include the following areas:

- In general, the facility descriptions in the ERP include: year of construction, construction materials, location and address, elevation, construction dimensions and details, and whether or not chlorine is stored at the site. Other items that would complete these descriptions include: main access routes and alternative access routes (especially for facilities whose main access route is known to be susceptible to flooding, earthquake susceptible areas such as creek crossing, etc.)

- A facility description for the Stillaguamish Ranney Collector was not located within the "System Components" section of the ERP copy reviewed. This description should be added to the ERP.

- Schematics of the eight critical system components, and other key facilities, should be included in an additional appendix to the ERP (or this plan). This would make it much easier for external emergency response personnel to safely access and effectively correct problems at these facilities.

- The ERP contains procedures to follow when certain supply lines go down. It was noted that for Edwards Springs, Lake Goodwin well is part of the backup plan. The City should develop an alternative backup plan, in case the Lake Goodwin well is impacted by the same hazard that may cause the loss the Edwards Springs supply and/or reservoir.

- A section addressing response procedures to follow in case of computer system or network intrusion or virus attack should be developed. This should include steps to take in order to protect the telemetry system from potential damage and how to return the system to full operation. If there is any power backup supply to the computer or telemetry system, appropriate steps should be described.

- A section addressing measures to be taken in the case of intrusion into a water system component should be developed and added. In addition, it was noted in Section 4, that intruder alert systems should be installed at as many critical facilities as is feasible.

In addition, the City should develop a section in the ERP where a hierarchy of communication systems is listed along with steps to take in case of power outage, frequency overload for radio systems, or other system failures. The backup system would be person to person communication. To the extent a procedure for this can be developed, it should be, for extreme emergencies. It will make resources more available for response and recovery.

5.3 Communications

The ERP Appendices list key personnel and staff call-back priority order for response to emergencies. This section contains an organizational chart, lists of staff with their home and cell phone numbers and addresses. In addition, the ERP lists outside agencies that can provide assistance in response to emergencies. Private contractors that can provide services to assist in repairs and recovery from an emergency are also listed in the ERP Appendices. Several of these contacts are also provided in Appendix A of this Plan. The agreements made with these various parties are discussed below.

5.4 Agreements with Other Agencies

As noted under Section 4, there are two types of agreements the City maintains with other jurisdictions in preparing for response to emergencies. These are Mutual Aid Agreements and Intertie Agreements. These types of agreements and the entities with which the City maintains these relationships are described below.

5.4.1 Mutual Aid Agreements

The City of Marysville is party to the 1995 "Sewer and Water Mutual Aid Agreement" that addresses sharing of personnel and equipment during emergency conditions. Such mutual aid is authorized in State law, at Chapter 39.34 RCW. Other parties to the agreement are listed below.

- Alderwood Water District
- Cross Valley Water District
- City of Edmonds
- City of Everett
- City of Lynnwood
- City of Monroe
- Mukilteo Water District
- Olympic View Water and Sewer District
- Silver Lake Water District

The agreement includes the following provisions.

- A public agency may request specific types of assistance, to deal with a disaster or emergency, either orally or in writing. If the request is oral, it must be documented in writing as a follow-up. The request must come from the agency's "designated official."

- A disaster or emergency is defined in the agreement as an event or situation that demands immediate action to preserve public health or protect life or property; or a state of emergency declared by the Governor.

- The responding public agency, through its designated official, can determine whether equipment and personnel are available. Failure to respond shall not be a cause for liability.

- Personnel and equipment made available shall, whenever possible, remain under the control of the responding agency, and may be withdrawn at any time.

- The requesting agency shall reimburse the responding agency for the cost of providing assistance.

- The City of Everett is charged with maintaining and distributing an up-to-date list of all agencies that have adopted the mutual aid agreement.

- In addition, the agreement includes various provisions regarding status of personnel while engaged in response actions, indemnification, insurance, terms of reimbursement, operational procedures, authorization and termination of the mutual aid agreement, and a prohibition on third-party rights.

These agreements are helpful if the other jurisdictions are not also impacted by the hazard. In the case of a regionwide event, many of the other entities will also be impacted and may not be available to respond. If however, there is an isolated incident, affecting Marysville alone or Marysville and its immediate neighbors only, then the mutual aid agreements and intertie agreements will more likely be effective in providing the City with assistance while the City works to remedy the impact of the hazard.

5.4.2 Intertie Agreements

Intertie agreements are maintained with adjoining jurisdictions that can provide backup supply when the City's own supply is interrupted. The City has intertie agreements with four jurisdictions at seven locations that provide flow into the City's system. There are additional interties that provide service to the other entities as well. Several of the interties noted in Table 5-1 provide flow in both directions.

Table 5-1
Interties Providing Flow to Marysville's System

Entity	Size of Intertie	Location/Address
Arlington	8"	198th Place NE and 57th Drive NE
	8"	198th Street and Cemetery Road
Snohomish County PUD	8"	7300 block of 44th St. NE
	4"	4020 71st Ave NE
Tulalip Tribes	8"	Marine Drive & 27th Ave NE
	4"	2000 block of Marine Drive
Seven Lakes Wtr. Asso.	?	North of Lake Goodwin well*

* Provides emergency backup service to Lake Goodwin well customers.

As noted above, these agreements are helpful if the other jurisdictions are not also impacted by the hazard. In the case of a regional event, many of these other entities will also be impacted and

may not be available to respond with backup supply. If however, there is an isolated incident, affecting Marysville alone, then the intertie agreements will more likely be effective in providing the City with backup supply while the City repairs critical system components.

The contact names and numbers for the individuals to contact are provided in Appendix A of this plan. These should be updated as necessary. The intertie locations are provided in the Emergency Response Plan.

Agreements with Service Providers

One other type of agreement the City should consider is service agreements with contractors of various types of services. As noted above, the City has several contact names and numbers for various services that would be needed during an emergency. What is not apparent is if any actual contracts are in place for services to be rendered under emergency circumstances. Having these contracts in place can smooth the resource acquisition process when there is an area-wide hazard and numerous entities are impacted. These contracts may specify hourly rates and services to be provided. If hourly rates are specified, the contracts will require periodic updating. These contractors should also have current copies or portions of the ERP and this Plan that the City deems appropriate. These vendors should be included in some of the emergency simulation practices, or kept apprised of any procedural changes made as a result of a simulation.

The responsibility for maintaining the agreements should be assigned. Periodic updates will be necessary, and subsequent updating of the City's ERP and this plan, as necessary.

5.5 Summary

This Section of the Plan has documented the response actions the City can take to protect the water system, to the extent possible, from emergencies caused by the hazards previously identified. In addition, activities to maintain current emergency operating procedures in the event of an emergency were also recommended. The intent of these measures is to minimize emergency impacts caused by the hazards, and return to normal operating service levels as soon as possible.

Section 6
Training

6.1 Introduction

There are numerous training programs designed to assist in training staff how to handle emergency situations. Well-trained staff will be better prepared to carry out response procedures to various types of emergency situations that could impact water supply, treatment, transmission, or distribution. Three key areas of training were identified for the City to consider as it develops its training programs to address contingencies in case of water supply interruptions. These three areas are:

- Training programs on operation of key facilities, equipment and backup systems
- Cross-training programs to ensure multiple staff understand facilities and operations outside their normal sphere of activity; and
- Simulated emergency scenarios.

The City provides much of this type of training already, especially in the area of specific facilities and equipment. The discussion below provides a description of existing training programs, related to the City's water system, and recommends additional options for the City to consider.

6.2 Training Programs

Operational training is essential, not only to smooth operation of the utility, but also to effective response to hazard generated emergencies. This training helps ensure that staff know safety measures necessary to ensure their own safety, as well as others, when responding to an emergency. This includes the basics, such as safe operations in confined spaces, electricity and power basics, and where emergency water and food supplies are stored. These essentials apply to employee homes as well as the work place, in order to free staff for emergency response.

Also covered within the area of training is training in the basic operations of system components. Training in this area may include:

- Location and operation of valves
- Manual operation of critical system components

- Location and operation of the portable generators, and priority sites for their use
- Manual operation of facilities normally controlled by telemetry

The City should augment this list as deemed necessary. Another important type of training for the City to undertake in its preparedness planning is cross-training. This involves selection of staff that would not normally respond to an emergency. The purpose of training these individuals is to provide familiarity and backup, in case they are the only ones available at the time of the emergency. Since the City has contractual issues which may prevent this type of training, it will be more important to cross-train management, or non-represented staff, and other outside personnel who respond to emergencies. Upper management can determine which staff are eligible for this type of training. An example of this type of training would be to train non-represented fire personnel on key water system facility locations and operations.

Finally, one other important training element involves simulated emergency training sessions or drills. These types of drills are most effective when held in conjunction with other City staff (fire, police, street maintenance crews) and/or outside agencies that will be involved in response to any real life water system emergency. Simulated emergency training sessions are further discussed in Section 6.2.3.

The next section describes the City's existing training programs, as they relate to water system operations and emergency response. That discussion is followed by further details of available resources within the above categories of training elements, and recommendations for frequency of the various types of training.

6.2.1 City's Existing Training Programs

The City's training program for staff that would respond in case of an emergency includes many of the essentials, the operational nuts and bolts training. There is a new employee orientation, which includes an introduction to the facilities and the emergency response plan. Health and safety training such blood borne pathogens, certifications on asbestos cement pipe handling, CPR, first aid and flagging are offered annually and in the new employee orientation. The City also has a Safety Officer who provides safety training opportunities in the first two months of each year. This training includes annual updates to:

- emergency response,
- blood borne pathogens,
- electrical safety,
- personal accident prevention,
- flagging certification (biannual),
- the chlorine program,

- confined space safety program,
- trenching and evacuation program,
- and several other maintenance equipment handling program.

There is also a weekly inspection and testing of important valves and pump operations. The portable generators are tested for readiness monthly. This testing can be performed by rotating staff for the task, in order to maintain staff familiarity with these facilities.

In summary, the City has a program covering the nuts and bolts training for general operations, which also prepares staff for emergency response. It is important to maintain this program over time, and make adjustments as new equipment is purchased and installed.

This training should be augmented by cross training sessions and simulated field trainings of emergencies. The value of cross-training is making a larger number of the personnel knowledgeable and available for emergency response. This provides more flexibility during the emergency. Simulation drills allow personnel to see how procedures and personnel operate in artificial emergency conditions. These training areas are further described below.

6.2.2 Training Resources

There are numerous resources available for many types of training, from operational to emergency response. A few are listed below:

- Seminars for staff to attend;
- Materials and videos available to provide to staff;
- Assigning key staff to attend seminars and return to train others.
- Coordinating training sessions with other outside agencies that handle emergency response.

Professional organizations are one source for these training programs. One of the most prominent training sources for water systems is the American Waterworks Association (AWWA). The AWWA has written, audio, and video resources available as well as speakers that the City may find useful. A listing of available resources, primarily websites, is provided in Appendix C.

In addition, there can be various sources available in surrounding jurisdictions. Utilities are often called upon to share a particular expertise they have developed, in order that others can learn and benefit from their experience. Learning about the expertise of a nearby jurisdiction may occur by word-of-mouth, the media, at professional organization meetings, or through their newsletters and websites. The City may chose to coordinate an annual meeting of surrounding jurisdictions to share information in a particular area, or to discuss emergency response issues in

general. In the past, the Snohomish County Office of Emergency Response has organized such meetings. They have also coordinated simulated drills. This may be a resource to draw upon to begin these meetings again. Determining the appropriate staff to train with each type of resource is essential to an effective program.

6.2.3 Exercises and Drills

Simulated emergency drills can be training sessions that are either carried out in the field, or discussed at a meeting. The latter type is referred to as "table top" simulations. This type of training is focused around a simulated situation, generated to force those in the training to test their familiarity with the facilities as well as with emergency procedures. Making the situation as detailed as possible adds more value to the result. Over time, multiple simulation exercises can address different types of emergency conditions. Identifying who is in charge, or in charge of each response area, and how to respond are some of the issues that are tested by these simulations. Elements such as disruption of communication systems, failure of backup supplies, and unavailability of key personnel can contribute to the effectiveness of the training exercise. Simply discussing this among the most likely effected staff is beneficial. Following up with field tests of that or other scenarios provides more depth and improves effectiveness.

These training sessions should occur at least once per year. Optimally, the utility maintenance staff would have at least one session of their own each year, followed by one session with either other City emergency response staff (hazardous materials response staff from the Fire Department, for example, or police officers), or outside agencies' emergency personnel. Each session would address a different scenario of hazard and subsequent supply reduction or impact. Any training above this level will improve the City's chances of minimizing damage to the system, and returning to full operation and services as quickly as possible during emergencies.

Security training should be coordinated with local police, fire and emergency preparedness personnel. This is done for several purposes. One, is for City staff to learn important security steps and to learn how to look for evidence of tampering on utility facilities. In addition, the City staff can familiarize the others with facilities and important aspects to know about each critical system component. This type of coordination should occur at a minimum of once per year, and more often if possible. Multiple personnel should be included so that there are more personnel familiar with the most important aspects of the system.

6.2.4 Availability of Personnel

Personnel are the most important resource to the City for operating the water system under emergency conditions triggered by the hazards described in earlier sections. Safety and well being of all personnel is key to having them available for response to hazard conditions. This

includes having resources available for personnel's family, in order to free them for work responsibilities. As training occurs for work place safety, encourage City staff to think about needs in their homes. Just as there must be emergency supplies of food and water available at work sites, so must there be supplies at home in order that staff can not only take care of themselves in off-hours during emergencies, but also that their families are cared for, which frees them for their work responsibilities. Staff should receive direction and training regarding preparations necessary at their homes in order for them to be available for work related duties during emergencies. This training would include information regarding provisioning at home, refreshing stored water supplies, and addressing any potential hazards their homes may face. Mitigation measures to take in homes can include securing bookshelves to walls, securing house to foundation, latches in cabinets, etc. With these measures secured for key water system personnel, they will more likely be available to maintain or repair system operations should any of the hazards occur.

An effective utility security program includes a number of straightforward, common sense measures. These include careful screening of all individuals who have access to utility facilities and procedures that create a record of who enters or leaves each facility and a record the time of entry and departure for the most critical system components (water supply and primary reservoirs). This program can also be used to determine if anyone if left at a site and is in danger. Additionally, staff must be trained to be alert to potential reliability or security threats.

Community Vigilance

Another security approach some utilities have used in the past includes alerting citizens to security problems or vandalism. Asking citizens to report any suspicious activity can assist in protecting the system, while minimizing cost to the ratepayers. Some utilities offer rewards for reports that result in apprehension of criminals and prevention of facility damage.

6.3 Summary

This section has documented the City's existing training program related to emergencies, and available training resources. In addition, recommendations were made to assist the City in continuing to develop its training program for emergency response to water supply reduction and emergencies.

Appendix A
Emergency Contacts

Note:

Formats are provided for important emergency contacts. The City can use existing information to enter into these formats, or use appropriate appendices from the City's existing Emergency Response Plan. Some forms require completion by City staff, or determination to use or not.

EMERGENCY CONTACT PERSONNEL/TELEPHONE NUMBERS

NAME	DEPARTMENT	HOME PHONE	WORK PHONE	CELL/PAGER

FIRE AND POLICE: EMERGENCY 911

Fire and Rescue
Fire Department
Police
Sewer Utility
Street Department
Parks Department
Mayor's Office
Alarm Company/Telemetry
The Alarm Center -
Office/Shop
Well 10

MEDIA CONTACTS (for notification of supply contamination/reduction)

(See City ERP for contact names and phone numbers)

Radio
TV/Cable
Newspaper
Staff to place notice on City website immediately

EMERGENCY REPAIR

ONE CALL (#0069)	(800) 424-5555, 1-800-553-4344
GTE	(800) 823-3233
Puget Sound Energy	(800) 321-4123, 1-800-424-5555
Street Light Outages	(800) 225-5773
Electric Contractor	
Towing Company	
AT&T Cable Broadband	(800) 526-7378, 1-800-241-3624
U.S. West Communications	(800) 214-8043
U.S. West Government Repair	(800) 214-8043
Verizon	(800) 483-1000
Snohomish County PUD	(425) 258-8211, 1-800-783-8300
DOH (Drinking Water Operations)	(425) 464-5401
DOE	(4250 649-7000
WSDOT	(206) 440-4490
Department of Fish and Wildlife	(360) 902-2614
EPA	(206) 442-1263
WISHA	(206) 281-5447
FEMA	(425) 487-4600
Snohomish County Emergency Management	(425) 423-7635
Washington State Office of Emergency Management	(800) 358-5990
Snohomish County Department of Health Emergency	(425) 339-5250 (day) (425) 681-0921 (cell)

NEARBY JURISDICTIONS/UTILITIES

City of Everett	(425) 257-8821
City of Arlington	(425) 258-0919 (water) (360) 435-3811 (general)
Seven Lakes	(360) 652-8192 (water)
Tulalip Tribes	(360) 653-4585
City of Stanwood	(425) 347-9795 (water) (360) 629-4577 (general)
Mukilteo Water District	(425) 355-3355

MUTUAL AID AGREEMENTS SIGNATORS / INTERTIE AGENCIES

List In Alphabetical Order, or priority order, or zone order, with Telephone numbers and contact Names

INTERTIES

ENTITY	CONTACT NAME	TITLE	CONTACT NUMBER
Tulalip Tribes			(360) 653-4585
Seven Lakes			(360) 652-8192
City of Arlington			(360) 435-3811
PUD			(425) 783-8616
City of Everett			(425) 257-8200

MUTUAL AID AGREEMENTS

Alderwood Water District			
Cross Valley Water District			
City of Edmonds			
City of Everett			
City of Lynnwood			
City of Monroe			
Mukilteo Water District			
Olympic View Water District			
Silver Lake Water District			

PORTABLE GENERATORS AND LOCATIONS

GENERATOR NAME/DESCRIPTION	ADDRESS OF LOCATION

WATER FACILITIES INVENTORY

FACILITY TYPE/ NAME	ADDRESS/LOCATION	TELEMETRY/CONTACT
Water Sources		
Edwards Springs		
Stillaguamish Ranney Collector		
Lake Goodwin Well		
Highway 9 Well		
Sunnyside Well #2		
Lake Chaplain/Everett Pipeline		
Treatment		
Stillaguamish Treatmnt Plant		
Chaplain Filtration (Everett)		
Storage Tanks		
Edward Springs Res.		
Sunnyside Standpipe		
Getchell Hill Res.		
Kellog-Marsh Stdpipe		
Highway 9 Reservoir		
Cedarcrest Reservoir		
Pump Stations		
Cedarcrest		
Stillaguamish Source		
Pipelines, Valves		
JOA 30" Pipeline		
Stillaguamish Line		

Appendix B
Priority Service Customers
Facility Inspection/Damage Forms

Note:

Forms are provided for the City to list priority service customers, in order to focus immediate response and follow-up. These would include customers on dialysis, hospitals, other emergency response centers, and other customers requiring water supply for life or death health reasons. These forms should be updated frequently. Other inspection forms are provided for City use during emergencies.

PRIORITY-SERVICE FORM*

Individuals/organizations located at the following service connections are critically dependent on an uninterrupted supply of water. Examples of customers include individuals on dialysis, hospitals, schools, and other customers dependent on water supply for life and health reasons. In the event of an emergency effecting their primary source, the following actions must be taken:

1. Notify the customer immediately. Verify that the second source, if any, is functioning.
2. Take the indicated emergency action, if required.

Name	Address	Telephone	Reason for Requesting Priority Service	Alternative Source Available Yes No	Emergency Action(s) to Be Taken

Approved _____ Date _____

*To be completed and used by water system personnel.

Last Updated _____

WATER FACILITY INSPECTION FORM

Inspect Facilities for the following items:

- Repair, replace or abandon facility.
- Possible affects from aftershocks.
- Indicate if field crews have performed the review and tagged facility and/or individual equipment items with preliminary assessment information.
- Structural Damage
- Utilities Status

	Normal	Off-Line	Standby Power
Power			
Telephone			
Telemetry			
Damage			

FACILITY TYPE/ NAME	external structural	non-struct damage	utilities status	additional hazards
Water Sources				
Goodwin Well				
Edwards Springs				
Stillaguamish Ranney Collector				
Highway 9 Well				
Sunnyside Well #2				
Lake Chaplain				
Treatment				
Stillaquamish Treatmnt Plant				
Chaplain Filtration (Everett)				

Last Updated _____

FACILITY TYPE/ NAME	external structural	non-struct damage	utilities status	additional hazards
Storage Tanks				
Edward Springs Res.				
Sunnyside Standpipe				
Getchell Hill Res.				
Kellog-Marsh Stdpipe				
Highway 9 Reservoir				
Cedarcrest Reservoir				
Pump Stations				
Cedarcrest				
Stillaguamish Source				
Pipelines, Valves				
JOA 30" Pipeline				
Stillaguamish Line				
No. 3 Line				
Interties				
Other_____				

OPERATING AND DAMAGE REPORT

This report must be filled out in detail and turned in. It must be signed by the responsible foreman and supervisor on completion of repair/emergency.

Part 1 – General Information

1. Date of this report_____

   Date and time water system became aware of break or problem_____

2. Location of break or problem_____

3. Person or persons who notified water system of break or problem_____

   _____

   Position(s)_____

4. Location and custody of book, card, memo, etc., containing information relative to this report

   _____

Part 2 – Pre-Action Information – Assessing the Emergency

1. Time/date crew arrived at scene_____

2. Names of crew persons at scene_____

3. Nature of problem and/or cause of break. If unknown, state probable cause and detail facts

   supporting conclusions._____

   _____

   _____

4. What damage was done?_____

5. What damage was done to adjacent property?_____

   _____

Part 3 – Emergency Action Taken

1. What emergency action(s) was taken to control situation at the scene?_____

   _____

   _____

   _____

2. Names of crew persons making emergency repairs_____

_____

3. Time/date emergency repairs were made and service was restored_____

_____

4. Materials used for repair_____

_____

5. Is further action needed? If so, explain_____

_____

_____

Part 4 – Supplemental Information

1. If quality problem, what disinfection procedures were followed?_____

_____

_____

_____

Is further action needed? Yes____ No____ Action _____

2. Were water quality samples taken?

Yes_____ No_____

Parameter	Date	Results

3. Were any photos taken? Yes____No____By whom?_____

4. Size and location of valves operated or work necessary to effect shutdown (diagram)_____

_____

5. Size, kind, type, pressure rating and/or class pipe appurtenance_____

_____

6. Date of installation _____ Life expectancy _____

7. Date of last inspection of pipe or appurtenances _____

8. Is main subject to excessive pressure or pressure changes? _____

9. History of prior trouble within _____ feet and dating back to _____

10. Present condition _____

11. Condition and type of joints _____

12. Type of soil in ditch and characteristic of ground cover around existing water main _____

_____

13. Depth of pipe (top of pipe to street surface) _____

14. Size of hole in street _____

15. Type and thickness of street surface _____

_____

IMPORTANT: WHERE IT APPEARS THAT DAMAGE CLAIMS MAY ARISE, FILL OUT AND ATTACH SUPPLEMENTARY SHEETS WITH ALL INFORMATION POSSIBLE AND DRAW A DIAGRAM ON A SEPARATE SHEET SHOWING AS MUCH DETAIL AS POSSIBLE, LOCATION, AND ADDRESS OF DAMAGED PROPERTY

Crew Leader _____ Supervisor _____

WATER QUALITY NOTICE

Date:_____

AN OFFICIAL NOTICE FROM CITY OF MARYSVILLE WATER UTILITY

During the earthquake (or other emergency situation) of (date), the water treatment and distribution system operated by the City suffered extensive damage. Water quality tests are underway to assure that the water is safe to drink. As a precaution, until the water quality tests are completed, the City is advising residents in the _____ area to only use boiled tap water or bottled water for drinking and cooking purposes. ***All tap water used for drinking or cooking should be boiled for at least five minutes.*** An alternative method of purification for residents that do not have gas or electricity is to use unscented liquid household bleach (Clorox, Purex, etc.). To do so, add 8 drops of bleach per gallon of clear water or 16 drops per gallon of cloudy water, mix thoroughly, and allow to stand for 30 minutes before using. A chlorine-like taste and odor will result from this purification procedure and is an indication that adequate disinfection has taken place. Water purification tablets may also be used by following the manufacturer's instructions.

Failure to follow this advisory could result in stomach or intestinal illness.

The City will notify residents as soon as can be determined that the water is safe to drink.

For further information or questions regarding your water, call the City Water Utility at _____.

Appendix C
Training Resources

Appendix C
Training Resources

Many of the following websites contain general infrastructure training information. In addition, there are a number of training programs and information in development, or recently developed, to address issues of security for critical infrastructure.

Critical Infrastructure Protection Board (www.cipb.gov)

An October 16, 2001 Executive Order from the President of the United Stated established a new senior executive branch board to coordinate a voluntary public-private partnership to protect information systems for critical infrastructure, including public water systems. The new board, the Critical Infrastructure Protection Board, is developing policies and coordinating programs for protecting information systems for critical infrastructure, including emergency preparedness communications and physical assets that support such systems. This board is also establishing voluntary standards, best practices, incident response policies and is coordinating research in this area. This executive order also established the National Infrastructure Advisory Council.

National Infrastructure Protection Center (www.nipc.gov)

There is also an FBI operation with infrastructure related information from the National Infrastructure Protection Center. This organization has been working with the electric industry in developing physical and cyber security indications, analysis, and warning reporting procedures. The emphasis of this effort is to encourage utilities (power in this case, but the same policies can be applied to all critical service utilities) to work together, and to centralize information about cyber attacks, in order that assistance can be provided to prevent widespread cyber attacks. Information on this topic may also be available at the National Electric Reliability Council (NERC) website [www.nerc.com].

Additionally, The Chemical and Emergency Preparedness and Prevention Office of the U.S. EPA, FEMA and many other Federal agencies provide support at their websites, as follow:

www.doj.gov/terrorism/funding.htm
www.epa.gov/ceppo/cntr-ter.html
www.fema.gov/emi/crslist.htm

The following organization's websites also contain useful information related to security of water systems:

The American Water Works Association (www.awwa.org)

Select "Security, What you need to know" or "Press Room" and then "Security Resources" Water Utility Managers and operators can send their name, title, utility name, public water system number, complete address, phone number and e-mail address to security@awwa.org with a request for "AWWA Resources" for a more extensive list of AWWA resources.

The National League of Cities (www.nlc.org)

The NLC recently conducted a survey of cities regarding security measures they are taking, including whether or not to close public facilities, especially reservoirs to the public.

Center for the Study of Bioterrorism and Emerging Infections
(www.bioterrorism.slu.edu)

National Domestic Preparedness Office (www.ndpo.gov)

Federal Emergency Management Agency (www.fema.gov)

The National Safety Council (www.nsc.org)

Centers for Disease Control (www.bt.cdc.gov)

APPENDIX E

Consistency Statement Checklists

Washington State Department of Health
Division of Environmental Health
Office of Drinking Water

Local Government Consistency Review Checklist

Water System Name: City of Marysville PWS ID: 51900C

Planning/Engineering Document Title: Water System Plan Plan Date: June 2016

Local Government with Jurisdiction: City of Marysville

WAC 246-290-108 Consistency with local plans and regulations:
Consistency with local plans and regulations applies to planning and engineering documents under WAC 246-290-106, 246-290-107, and 246-290-110(4)(b (ii).

1) Municipal water suppliers must include a consistency review and supporting documentation in its planning or engineering document describing how it has addressed consistency with **local plans and regulations**. This review must include specific elements of local plans and regulations, as they reasonably relate to water service as determined by Department of Health (DOH). Complete the table below and see instructions on back.

Local Government Consistency Statement	Page(s) in Planning Document	Yes – No – Not Applicable
a) The water system service area is consistent with the adopted land use and zoning within the applicable service area.	Figs. 2-3 and 3-1	
b) The six-year growth projection used to forecast water demand is consistent with the adopted city/county's population growth projections. If a different growth projection is used, provide an explanation of the alternative growth projection and methodology.	Pages 3-6 to 3-10	
c) Applies to cities and towns that provide water service: All water service area policies of the city or town are consistent with the utility service extension ordinances of the city or town.	Pages 5-3 to 5-4, App. R	
d) Service area policies for new service connections are consistent with the adopted local plans and adopted development regulations of all jurisdictions with authority over the service area [City(ies), County(ies)].	Pages 5-1 to 5-4, App. R	
e) Other relevant elements related to water supply are addressed in the water system plan, if applicable; Coordinated Water System plans, Regional Wastewater plans, Reclaimed Water plans, Groundwater Area Management plans, and Capital Facilities Element of Comprehensive plans.	Pages 3-1 to 3-4	

I certify that the above statements are true to the best of my knowledge and that these specific elements are consistent with adopted local plans and development regulations.

_____ _____
Signature Date

_____
Printed Name, Title, & Jurisdiction

Consistency Review Guidance

For Use by Local Governments and Municipal Water Suppliers

This checklist may be used to meet the requirements of WAC 246-290-108. When using an alternative format, it must describe all of the elements; 1a), b), c), d), and e), when they apply.

For **water system plans (WSP)**, a consistency review is required for the retail service area and any additional areas where a municipal water supplier wants to expand its water right's place of use.

For **small water system management programs**, a consistency review is only required for areas where a municipal water supplier wants to expand its water right's place of use. If no water right place of use expansion is requested, a consistency review is not required.

For **engineering documents**, a consistency review is required for areas where a municipal water supplier wants to expand its water right's place of use (water system plan amendment is required). For non-community water systems, a consistency review is required when requesting a place of use expansion. All engineering documents must be submitted with a service area map per WAC 246-290-110(4)(b)(ii).

A) Documenting Consistency: Municipal water suppliers must document all of the elements in a consistency review per WAC 246-290-108.

1 a) Provide a copy of the adopted **land use/zoning** map corresponding to the service area. The uses provided in the WSP should be consistent with the adopted land use/zoning map. Include any other portions of comprehensive plans or development regulations that are related to water supply planning.

1 b) Include a copy of the **six-year growth projections** that corresponds to the service area. If the local population growth rate projections are not used, provide a detailed explanation on why the chosen projections more accurately describe the expected growth rate. Explain how it is consistent with the adopted land use.

1c) Include water service area policies and show that they are consistent with the **utility service extension ordinances** within the city or town boundaries. This applies to cities and towns only.

1 d) Include all **service area policies** for how new water service will be provided to new customers.

1 e) **Other relevant elements** related to water supply planning as determined by the department (DOH). See Local Government Consistency – Other Relevant Elements, Policy B.07, September 2009.

B) Documenting an Inconsistency: Please document the inconsistency, include the citation from the comprehensive plan or development regulation, and provide direction on how this inconsistency can be resolved.

C) Documenting Lack of Consistency Review by Local Government: Where the local government with jurisdiction did not provide a consistency review, document efforts made and the amount of time provided to the local government for their review. Please include: name of contact, date, and efforts made (letters, phone calls, and e-mails). In order to self-certify, please contact the DOH Planner.

The Department of Health is an equal opportunity agency. For persons with disabilities, this document is available on request in other formats. To submit a request, please call 1-800-525-0127 (TTY 1-800-833-6388).

Washington State Department of Health
Division of Environmental Health
Office of Drinking Water

Local Government Consistency Review Checklist

Water System Name: City of Marysville PWS ID: 51900C

Planning/Engineering Document Title: Water System Plan Plan Date: June 2016

Local Government with Jurisdiction: Snohomish County

WAC 246-290-108 Consistency with local plans and regulations:
Consistency with local plans and regulations applies to planning and engineering documents under WAC 246-290-106, 246-290-107, and 246-290-110(4)(b (ii).

1) Municipal water suppliers must include a consistency review and supporting documentation in its planning or engineering document describing how it has addressed consistency with **local plans and regulations**. This review must include specific elements of local plans and regulations, as they reasonably relate to water service as determined by Department of Health (DOH). Complete the table below and see instructions on back.

Local Government Consistency Statement	Page(s) in Planning Document	Yes – No – Not Applicable
a) The water system service area is consistent with the adopted land use and zoning within the applicable service area.	Figs. 2-3 and 3-1	
b) The six-year growth projection used to forecast water demand is consistent with the adopted city/county's population growth projections. If a different growth projection is used, provide an explanation of the alternative growth projection and methodology.	Pages 3-6 to 3-10	
c) Applies to cities and towns that provide water service: All water service area policies of the city or town are consistent with the utility service extension ordinances of the city or town.	Pages 5-3 to 5-4, App. R	
d) Service area policies for new service connections are consistent with the adopted local plans and adopted development regulations of all jurisdictions with authority over the service area [City(ies), County(ies)].	Pages 5-1 to 5-4, App. R	
e) Other relevant elements related to water supply are addressed in the water system plan, if applicable; Coordinated Water System plans, Regional Wastewater plans, Reclaimed Water plans, Groundwater Area Management plans, and Capital Facilities Element of Comprehensive plans.	Pages 3-1 to 3-4	

I certify that the above statements are true to the best of my knowledge and that these specific elements are consistent with adopted local plans and development regulations.

_____ _____
Signature Date

_____
Printed Name, Title, & Jurisdiction

Consistency Review Guidance

For Use by Local Governments and Municipal Water Suppliers

This checklist may be used to meet the requirements of WAC 246-290-108. When using an alternative format, it must describe all of the elements; 1a), b), c), d), and e), when they apply.

For **water system plans (WSP)**, a consistency review is required for the retail service area and any additional areas where a municipal water supplier wants to expand its water right's place of use.

For **small water system management programs**, a consistency review is only required for areas where a municipal water supplier wants to expand its water right's place of use. If no water right place of use expansion is requested, a consistency review is not required.

For **engineering documents**, a consistency review is required for areas where a municipal water supplier wants to expand its water right's place of use (water system plan amendment is required). For non-community water systems, a consistency review is required when requesting a place of use expansion. All engineering documents must be submitted with a service area map per WAC 246-290-110(4)(b)(ii).

A) Documenting Consistency: Municipal water suppliers must document all of the elements in a consistency review per WAC 246-290-108.

1 a) Provide a copy of the adopted **land use/zoning** map corresponding to the service area. The uses provided in the WSP should be consistent with the adopted land use/zoning map. Include any other portions of comprehensive plans or development regulations that are related to water supply planning.

1 b) Include a copy of the **six-year growth projections** that corresponds to the service area. If the local population growth rate projections are not used, provide a detailed explanation on why the chosen projections more accurately describe the expected growth rate. Explain how it is consistent with the adopted land use.

1c) Include water service area policies and show that they are consistent with the **utility service extension ordinances** within the city or town boundaries. This applies to cities and towns only.

1 d) Include all **service area policies** for how new water service will be provided to new customers.

1 e) **Other relevant elements** related to water supply planning as determined by the department (DOH). See Local Government Consistency – Other Relevant Elements, Policy B.07, September 2009.

B) Documenting an Inconsistency: Please document the inconsistency, include the citation from the comprehensive plan or development regulation, and provide direction on how this inconsistency can be resolved.

C) Documenting Lack of Consistency Review by Local Government: Where the local government with jurisdiction did not provide a consistency review, document efforts made and the amount of time provided to the local government for their review. Please include: name of contact, date, and efforts made (letters, phone calls, and e-mails). In order to self-certify, please contact the DOH Planner.

The Department of Health is an equal opportunity agency. For persons with disabilities, this document is available on request in other formats. To submit a request, please call 1-800-525-0127 (TTY 1-800-833-6388).

APPENDIX F

SEPA Checklist

ENVIRONMENTAL REVIEW (SEPA) APPLICATION CHECKLIST

Community Development Department ◆ 80 Columbia Avenue ◆ Marysville, WA 98270
(360) 363-8100 ◆ (360) 651-5099 FAX ◆ Office Hours: Monday - Friday 7:30 AM - 4:00 PM

Washington State Environmental Policy Act, RCW 43.21C

Washington State Administrative Code, WAC 197-11-960 Environmental Checklist

Purpose of checklist:

Governmental agencies use this checklist to help determine whether the environmental impacts of your proposal are significant. This information is also helpful to determine if available avoidance, minimization or compensatory mitigation measures will address the probable significant impacts or if an environmental impact statement will be prepared to further analyze the proposal.

***Instructions for applicants*:** [help]

This environmental checklist asks you to describe some basic information about your proposal. Please answer each question accurately and carefully, to the best of your knowledge. You may need to consult with an agency specialist or private consultant for some questions. You may use "not applicable" or "does not apply" only when you can explain why it does not apply and not when the answer is unknown. You may also attach or incorporate by reference additional studies reports. Complete and accurate answers to these questions often avoid delays with the SEPA process as well as later in the decision-making process.

The checklist questions apply to all parts of your proposal, even if you plan to do them over a period of time or on different parcels of land. Attach any additional information that will help describe your proposal or its environmental effects. The agency to which you submit this checklist may ask you to explain your answers or provide additional information reasonably related to determining if there may be significant adverse impact.

Instructions for Lead Agencies:

Please adjust the format of this template as needed. Additional information may be necessary to evaluate the existing environment, all interrelated aspects of the proposal and an analysis of adverse impacts. The checklist is considered the first but not necessarily the only source of information needed to make an adequate threshold determination. Once a threshold determination is made, the lead agency is responsible for the completeness and accuracy of the checklist and other supporting documents.

Use of checklist for nonproject proposals: [help]

For nonproject proposals (such as ordinances, regulations, plans and programs), complete the applicable parts of sections A and B plus the SUPPLEMENTAL SHEET FOR NONPROJECT ACTIONS (part D). Please completely answer all questions that apply and note that the words "project," "applicant," and "property or site" should be read as "proposal," "proponent," and "affected geographic area," respectively. The lead agency may exclude (for non-projects) questions in Part B - Environmental Elements –that do not contribute meaningfully to the analysis of the proposal.

NOTE: The checklist questions apply to all parts of your proposal, even if you plan to do them over a period of time or on different parcels of land. Attach any additional information that will help describe your proposal or its environmental effects. You may

be asked to explain your answers or provide additional information reasonably related to determining if there may be significant adverse impact.

Required Attachments

Submit the original checklist form and six (6) copies (for a total of seven (7)) along with seven (7) copies of each of the following:

1. Vicinity map clearly showing the location of the project with respect to public streets and other parcels and development
2. Site plan (at original drawing size)
3. Site plan (reduced to not larger than 11 x 17-inch size)
4. Conceptual building elevations
5. Conceptual vehicle maneuvering diagram (when applicable)

Submit four (4) copies of the following when appropriate:

1. Wetland Delineation
2. Geotechnical Reports
3. Fisheries Study

The site plan must show north arrow and engineering scale; any significant or natural features such as creeks, wetlands, steep slopes; dimensions and shape of the lot; location and size of existing and proposed buildings and development, including parking and landscape areas, adjacent streets and point of ingress and egress, and adjacent uses.

Correspondence

Note that all correspondence regarding the environmental review of your project will be sent to the person listed as **Applicant.**

Application Format

The application will only be accepted if the original form is used (with typewritten answers in the spaces provided) or the application is reproduced in identical form.

Fees

There is a nonrefundable application fee for all environmental checklists. Submit the fee with the application(s) and make checks payable to the City of Marysville.

Residential (1-9 lots or dwelling units) $350.00
Residential (10-20 lots or dwelling units) $500.00
Residential (21-100 lots or dwelling units) $1,000.00
Residential (greater than 100 lots or dwelling units) $1,500.00
Commercial/Industrial (0 to 2 acres) $350.00
Commercial/Industrial (2.1 to 20 acres) $750.00
Commercial/Industrial (greater than 20 acres) $1,500.00

Pre-application Conference

Most projects that are not categorically exempt from SEPA will require a pre-application conference; in some cases, at the discretion of the Community Development Director, the pre-application conference may be waived.

The pre-application conference must be conducted prior to the submittal of the environmental

checklist.

SEPA Exempt Determinations

Projects that meet the thresholds for categorical exemptions of Chapter 22E.030 MMC are exempt from filing an environmental checklist. All other project and non-project actions require a completed environmental checklist and a project permit application to be submitted. If an applicant feels that their proposal should be considered to be SEPA-exempt, the applicant can submit a letter requesting a SEPA exempt determination with the environmental checklist and fee. The Community Development Director will review the request and if the application is determined to be SEPA exempt, a letter will be issued confirming the SEPA exempt status.

Project Phasing

The Checklist questions apply to all parts of your proposal, even if you plan to phase the project over a period of time or on different parcels of land. You must include any additional information that helps describe your proposal or its environmental effects. You may be asked to explain your answers or provide additional information reasonably related to determining if there may be significant adverse impact(s).

SEPA Appeals

Any agency or person may appeal a Determination of Non Significance (DNS) or Determination of Significance (DS) by completing and submitting an appeal form to the Hearing Examiner within fourteen (14) calendar days of the date the determination is final. Such appeals must be filed with the City Clerk. Appeals of environmental determinations under SEPA, including administrative appeals of a threshold determination, shall be heard by the Hearing Examiner and shall proceed pursuant to Chapter 22G.010 Article VIII *Appeals*. There is a nonrefundable $500 Administrative Appeal fee to be submitted with appeal.

City of Marysville
2016 Water Comprehensive Plan
Draft Environmental Checklist

A. BACKGROUND [help]

1. Name of proposed project, if applicable: [help]

   City of Marysville 2016 Water Comprehensive Plan

2. Name of applicant: [help]

   City of Marysville

3. Address and phone number of applicant and contact person: [help]

   Attn: Ryan Morrison, PE
   80 Columbia Ave
   Marysville, WA 98270
   (360) 363-8100

4. Date checklist prepared: [help]

   July 28, 2016

5. Agency requesting checklist: [help]

   City of Marysville Public Utilities Department

6. Proposed timing or schedule (including phasing, if applicable): [help]

   The City of Marysville 2016 Water Comprehensive Plan, also known as the Water System Plan (WSP), includes planning considerations, existing system conditions, operation and maintenance standards and recommended improvements to the City's water system for the purpose of meeting future water demands in the City's Retail Water Service Area. The plan discusses both administrative improvements as well as physical system improvements to meet these needs.

   The Capital Improvement Plan (CIP) presented in the WSP consists mainly of physical improvements to the system that are intended to improve the City's ability to provide sufficient quantity and quality of water. The projects described in the CIP are grouped according to water main improvements, pressure zone improvements, facility improvement, and miscellaneous improvements. The projects are defined for each year with the projected estimated costs associated with each project. However, the CIP projects listed in the WSP should not be viewed as a commitment by the City to implement each project as planned and shown in the WSP. Actual project implementation will be based upon environmental review, permits and approvals, available funding and scheduling needs.

   This WSP is a non-project action. A separate Washington State Environmental Policy Act (SEPA) review will be completed prior to actual implementation and construction of each individual project as identified on the CIP list. Certain categorical exemptions from the SEPA review process may apply to specific projects, in accordance with WAC 97-11-800.

7. Do you have any plans for future additions, expansion, or further activity related to or connected with this proposal? If yes, explain. [help]

An update to the WSP is currently required by the DOH every six years, however it is anticipated that future requirements for WSP submittal will be modified from 6 years to 10 year once the proposed revisions to the WAC are approved in 2016. Any projects in the current WSP that fall beyond the 6 year (or ten year) planning horizon will be updated at the time of the next update. As noted above, a SEPA review will be conducted, as needed, for each project in the CIP scheduled to occur in the next 6 (or ten) years.

8. List any environmental information you know about that has been prepared, or will be prepared, directly related to this proposal. [help]

Specific environmental information has not been prepared for the update of the WSP. General programmatic level environmental impact information for this proposal is included in Section D.

9. Do you know whether applications are pending for governmental approvals of other proposals directly affecting the property covered by your proposal? If yes, explain. [help]

Development within the City's Water Retail Service Area will continue throughout the life of the WSP. This is consistent with the Snohomish County and City's planning policies, the Urban Growth Boundary and other environmental regulations.

10. List any government approvals or permits that will be needed for your proposal, if known. [help]

The WSP, and all of its updates, must be approved by the Washington State Department of Health. No project specific approvals or permits are required as part of the WSP update.

11. Give brief, complete description of your proposal, including the proposed uses and the size of the project and site. There are several questions later in this checklist that ask you to describe certain aspects of your proposal. You do not need to repeat those answers on this page. (Lead agencies may modify this form to include additional specific information on project description.) [help]

The WSP is a Non-Project Action. Specific physical improvements/project listed in the WSP will have separate SEPA reviews, as necessary.

12. Location of the proposal. Give sufficient information for a person to understand the precise location of your proposed project, including a street address, if any, and section, township, and range, if known. If a proposal would occur over a range of area, provide the range or boundaries of the site(s). Provide a legal description, site plan, vicinity map, and topographic map, if reasonably available. While you should submit any plans required by the agency, you are not required to duplicate maps or detailed plans submitted with any permit applications related to this checklist. [help]

Marysville's Water Retail Service Area covers approximately 25 square miles. This area is bounded by Interstate 5 to the west and State Route 9 to the East. The Southern and Northern limits are approximately bounded by Steamboat Slough and 180th Street NE near the Arlington airport, respectively. Three small developed areas located along 172nd Street NE and Lakewood Road are located outside the current service area boundary but are served by Marysville. Refer to Figure 2-1 of the WSP for a map of Marysville's Water Service Area.

B. ENVIRONMENTAL ELEMENTS [HELP]

1. Earth

a. General description of the site [help]
(***bold/italicize***): Flat, rolling, hilly, steep slopes, mountainous, other _____

Does not apply

b. What is the steepest slope on the site (approximate percent slope)? [help]

Does not apply

c. What general types of soils are found on the site (for example, clay, sand, gravel, peat, muck)? If you know the classification of agricultural soils, specify them and note any agricultural land of long-term commercial significance and whether the proposal results in removing any of these soils. [help]

Does not apply

d. Are there surface indications or history of unstable soils in the immediate vicinity? If so, describe. [help]

Does not apply

e. Describe the purpose, type, total area, and approximate quantities and total affected area of any filling, excavation, and grading proposed. Indicate source of fill. [help]

Does not apply

f. Could erosion occur as a result of clearing, construction, or use? If so, generally describe. [help]

Does not apply

g. About what percent of the site will be covered with impervious surfaces after project construction (for example, asphalt or buildings)? [help]

Does not apply

h. Proposed measures to reduce or control erosion, or other impacts to the earth, if any: [help]

Does not apply

2. Air

a. What types of emissions to the air would result from the proposal during construction, operation, and maintenance when the project is completed? If any, generally describe and give approximate quantities if known. [help]

Does not apply

b. Are there any off-site sources of emissions or odor that may affect your proposal? If so, generally describe. [help]

Does not apply

c. Proposed measures to reduce or control emissions or other impacts to air, if any: [help]

Does not apply

3. Water

a. Surface Water: [help]

1) Is there any surface water body on or in the immediate vicinity of the site (including year-round and seasonal streams, saltwater, lakes, ponds, wetlands)? If yes, describe type and provide names. If appropriate, state what stream or river it flows into. [help]

Does not apply

2) Will the project require any work over, in, or adjacent to (within 200 feet) the described waters? If yes, please describe and attach available plans. [help]

Does not apply

3) Estimate the amount of fill and dredge material that would be placed in or removed from surface water or wetlands and indicate the area of the site that would be affected. Indicate the source of fill material. [help]

Does not apply

4) Will the proposal require surface water withdrawals or diversions? Give general description, purpose, and approximate quantities if known. [help]

Does not apply

5) Does the proposal lie within a 100-year floodplain? If so, note location on the site plan. [help]

Does not apply

6) Does the proposal involve any discharges of waste materials to surface waters? If so, describe the type of waste and anticipated volume of discharge. [help]

Does not apply

b. Ground Water:

1) Will groundwater be withdrawn from a well for drinking water or other purposes? If so, give a general description of the well, proposed uses and approximate quantities withdrawn from the well. Will water be discharged to groundwater? Give general description, purpose, and approximate quantities if known. [help]

The City will not be applying for additional water rights in conjunction with this WSP update. There are no City water utility operations that involve discharge to ground waters.

2) Describe waste material that will be discharged into the ground from septic tanks or other sources, if any (for example: Domestic sewage; industrial, containing the following chemicals. . . ; agricultural; etc.). Describe the general size of the system, the number of such systems, the number of houses to be served (if applicable), or the number of animals or humans the system(s) are expected to serve. [help]

Does not apply

c. Water runoff (including stormwater):

1) Describe the source of runoff (including storm water) and method of collection and disposal, if any (include quantities, if known). Where will this water flow? Will this water flow into other waters? If so, describe. [help]

Does not apply

2) Could waste materials enter ground or surface waters? If so, generally describe. [help]

Does not apply

3) Does the proposal alter or otherwise affect drainage patterns in the vicinity of the site? If so, describe.

Does not apply

d. Proposed measures to reduce or control surface, ground, and runoff water, and drainage pattern impacts, if any:

Does not apply

4. Plants [help]

a. ***Bold/Italicize*** the types of vegetation found on the site: [help]

Does not apply

deciduous tree: alder, maple, aspen, other
evergreen tree: fir, cedar, pine, other
shrubs
grass
pasture
crop or grain
Orchards, vineyards or other permanent crops.

wet soil plants: cattail, buttercup, bullrush, skunk cabbage, other
water plants: water lily, eelgrass, milfoil, other
other types of vegetation

b. What kind and amount of vegetation will be removed or altered? [help]

None

c. List threatened and endangered species known to be on or near the site. [help]

Does not apply

d. Proposed landscaping, use of native plants, or other measures to preserve or enhance vegetation on the site, if any: [help]

Does not apply

e. List all noxious weeds and invasive species known to be on or near the site.

Does not apply

5. Animals

a. ***Bold/Italicize*** any birds and other animals which have been observed on or near the site or are known to be on or near the site. Examples include: [help]

Does not apply

birds: hawk, heron, eagle, songbirds, other:
mammals: deer, bear, elk, beaver, other:
fish: bass, salmon, trout, herring, shellfish, other _____

b. List any threatened and endangered species known to be on or near the site. [help]

Does not apply

c. Is the site part of a migration route? If so, explain. [help]

Does not apply

d. Proposed measures to preserve or enhance wildlife, if any: [help]

Does not apply

e. List any invasive animal species known to be on or near the site.

Does not apply

6. Energy and natural resources

a. What kinds of energy (electric, natural gas, oil, wood stove, solar) will be used to meet the completed project's energy needs? Describe whether it will be used for heating, manufacturing, etc. [help]

Does not apply

b. Would your project affect the potential use of solar energy by adjacent properties? If so, generally describe. [help]

Does not apply

c. What kinds of energy conservation features are included in the plans of this proposal? List other proposed measures to reduce or control energy impacts, if any: [help]

Does not apply

7. Environmental health

a. Are there any environmental health hazards, including exposure to toxic chemicals, risk of fire and explosion, spill, or hazardous waste that could occur as a result of this proposal? If so, describe. [help]

None

1) Describe any known or possible contamination at the site from present or past uses.

2) Describe existing hazardous chemicals/conditions that might affect project development and design. This includes underground hazardous liquid and gas transmission pipelines located within the project area and in the vicinity.

3) Describe any toxic or hazardous chemicals that might be stored, used, or produced during the project's development or construction, or at any time during the operating life of the project.

4) Describe special emergency services that might be required.

5) Proposed measures to reduce or control environmental health hazards, if any:

b. Noise

1) What types of noise exist in the area which may affect your project (for example: traffic, equipment, operation, other)? [help]

Does not apply

2) What types and levels of noise would be created by or associated with the project on a short-term or a long-term basis (for example: traffic, construction, operation, other)? Indicate what hours noise would come from the site. [help]

Does not apply

3) Proposed measures to reduce or control noise impacts, if any: [help]

Does not apply

8. Land and shoreline use

a. What is the current use of the site and adjacent properties? Will the proposal affect current land uses on nearby or adjacent properties? If so, describe. [help]

Does not apply

b. Has the project site been used as working farmlands or working forest lands? If so, describe. How much agricultural or forest land of long-term commercial significance will be converted to other uses as a result of the proposal, if any? If resource lands have not been designated, how many acres in farmland or forest land tax status will be converted to nonfarm or nonforest use? [help]

Does not apply

1) Will the proposal affect or be affected by surrounding working farm or forest land normal business operations, such as oversize equipment access, the application of pesticides, tilling, and harvesting? If so, how:

Does not apply

c. Describe any structures on the site. [help]

Does not apply

d. Will any structures be demolished? If so, what? [help]

Does not apply

e. What is the current zoning classification of the site? [help]

Does not apply

f. What is the current comprehensive plan designation of the site? [help]

Does not apply

g. If applicable, what is the current shoreline master program designation of the site? [help]

Does not apply

h. Has any part of the site been classified as a critical area by the city or county? If so, specify. [help]

Does not apply

i. Approximately how many people would reside or work in the completed project? [help]

Does not apply

j. Approximately how many people would the completed project displace? [help]

Does not apply

k. Proposed measures to avoid or reduce displacement impacts, if any: [help]

Does not apply

l. Proposed measures to ensure the proposal is compatible with existing and projected land uses and plans, if any: [help]

Does not apply

m. Proposed measures to ensure the proposal is compatible with nearby agricultural and forest lands of long-term commercial significance, if any:

Does not apply

9. Housing

a. Approximately how many units would be provided, if any? Indicate whether high, middle, or low-income housing. [help]

Does not apply

b. Approximately how many units, if any, would be eliminated? Indicate whether high, middle, or low-income housing. [help]

Does not apply

c. Proposed measures to reduce or control housing impacts, if any: [help]

Does not apply

10. Aesthetics

a. What is the tallest height of any proposed structure(s), not including antennas; what is the principal exterior building material(s) proposed? [help]

Does not apply

b. What views in the immediate vicinity would be altered or obstructed? [help]

Does not apply

c. Proposed measures to reduce or control aesthetic impacts, if any: [help]

Does not apply

11. Light and glare

a. What type of light or glare will the proposal produce? What time of day would it mainly occur? [help]

Does not apply

b. Could light or glare from the finished project be a safety hazard or interfere with views? [help]

Does not apply

c. What existing off-site sources of light or glare may affect your proposal? [help]

Does not apply

d. Proposed measures to reduce or control light and glare impacts, if any:

Does not apply

12. Recreation

a. What designated and informal recreational opportunities are in the immediate vicinity? [help]

Does not apply

b. Would the proposed project displace any existing recreational uses? If so, describe. [help]

Does not apply

c. Proposed measures to reduce or control impacts on recreation, including recreation opportunities to be provided by the project or applicant, if any: [help]

Does not apply

13. Historic and cultural preservation

a. Are there any buildings, structures, or sites, located on or near the site that are over 45 years old listed in or eligible for listing in national, state, or local preservation registers located on or near the site? If so, specifically describe. [help]

Does not apply

b. Are there any landmarks, features, or other evidence of Indian or historic use or occupation? This may include human burials or old cemeteries. Are there any material evidence, artifacts, or areas of cultural importance on or near the site? Please list any professional studies conducted at the site to identify such resources. [help]

Does not apply

c. Describe the methods used to assess the potential impacts to cultural and historic resources on or near the project site. Examples include consultation with tribes and the department of archeology and historic preservation, archaeological surveys, historic maps, GIS data, etc. [help]

Does not apply

d. Proposed measures to avoid, minimize, or compensate for loss, changes to, and disturbance to resources. Please include plans for the above and any permits that may be required.

Does not apply

14. Transportation

a. Identify public streets and highways serving the site or affected geographic area and describe proposed access to the existing street system. Show on site plans, if any. [help]

Does not apply

b. Is the site or affected geographic area currently served by public transit? If so, generally describe. If not, what is the approximate distance to the nearest transit stop? [help]

Does not apply

c. How many additional parking spaces would the completed project or non-project proposal have? How many would the project or proposal eliminate? [help]

Does not apply

d. Will the proposal require any new or improvements to existing roads, streets, pedestrian, bicycle or state transportation facilities, not including driveways? If so, generally describe (indicate whether public or private). [help]

DOES NOT APPLY

e. Will the project or proposal use (or occur in the immediate vicinity of) water, rail, or air transportation? If so, generally describe. [help]

Does not apply

f. How many vehicular trips per day would be generated by the completed project or proposal? If known, indicate when peak volumes would occur and what percentage of the volume would be trucks (such as commercial and nonpassenger vehicles). What data or transportation models were used to make these estimates? [help]

Does not apply

g. Will the proposal interfere with, affect or be affected by the movement of agricultural and forest products on roads or streets in the area? If so, generally describe.

Does not apply

h. Proposed measures to reduce or control transportation impacts, if any: [help]

Does not apply

15. Public services

a. Would the project result in an increased need for public services (for example: fire protection, police protection, public transit, health care, schools, other)? If so, generally describe. [help]

Does not apply

b. Proposed measures to reduce or control direct impacts on public services, if any. [help]

Does not apply

16. Utilities

a. ***Bold/Italicize*** utilities currently available at the site: [help]

Does not apply

Electricity
natural gas
water
refuse service
telephone
sanitary sewer
septic system
other _____

b. Describe the utilities that are proposed for the project, the utility providing the service, and the general construction activities on the site or in the immediate vicinity which might be needed. [help]

Does not apply

C. SIGNATURE [HELP]

The above answers are true and complete to the best of my knowledge. I understand that the lead agency is relying on them to make its decision.

Signature: _____

Print name of signee: RYAN MORRISON, P.E.

Position and Agency/Organization: PROJECT ENGINNER

Date Submitted: _____

D. SUPPLEMENTAL SHEET FOR NONPROJECT ACTIONS [HELP]

(**IT IS NOT NECESSARY** to use this sheet for project actions)

Because these questions are very general, it may be helpful to read them in conjunction with the list of the elements of the environment.

When answering these questions, be aware of the extent the proposal, or the types of activities likely to result from the proposal, would affect the item at a greater intensity or at a faster rate than if the proposal were not implemented. Respond briefly and in general terms.

The proposed action is the adoption of the Water System Plan (WSP) 2016 update. The WSP refers to the development and utilization of transmission water supply projects that either are or may become part of Marysville's future water system. Environmental impacts would be associated with construction activities as they relate to the construction, maintenance and operations of the future project activities. These impacts will be evaluated during the environmental review of each specific project.

1. How would the proposal be likely to increase discharge to water; emissions to air; production, storage, or release of toxic or hazardous substances; or production of noise?

   The construction of some of the proposed components of Marysville's water system may involve the creation and discharge or construction stormwater. Effects on surface waters may include increased runoff volumes and increased peak flows. The construction of some facilities may also result in the creation of impervious surfaces and their associated runoff.

   Impacts to air quality due to construction of facilities could result in temporary increases in particulate emissions depending on the type of activity, weather and equipment used in construction. Increased carbon monoxide and oxides of nitrogen in the exhaust of construction equipment and power generation may occur during construction. Diesel, gasoline, propane and natural gas emergency electrical power generation equipment located at some facilities would produce emissions to the air during operation and maintenance activities.

   The production and release of toxic or hazardous substances is not anticipated although there will likely be some storage and use of chemicals associated with the operation of water treatment facilities.

   Proposed measures to avoid or reduce such increases are:

   Minimization of impacts to surface waters would be achieved through implementation of applicable Best Management Practices (BMPs) and compliance with the regulatory requirements and permits (e.g. NPDES Construction Stormwater Permit).

   Minimization of impacts to air quality during construction would be achieved by keeping exposed soil damp by spraying with water, covering truck loads, covering dirt and debris piles, properly maintaining equipment and scheduling construction work such as to minimize truck traffic and equipment operations.

   All necessary chemical storage would be designed to meet required safety and environmental regulatory requirements including secondary containment, leak detection, alarms, prevention plans and equipment to clean up and contain any spills.

2. How would the proposal be likely to affect plants, animals, fish, or marine life?

Transmission and water supply system components would not affect marine life. Plants, animals and fish could be affected by water facilities, depending on location and function. For buried structures, such as pipelines, the impacts would be temporary and limited to the construction period. For pump stations and treatment facilities the effects would be above ground and extend beyond the construction period.

Proposed measures to protect or conserve plants, animals, fish, or marine life are:

The site layout and design of such facilities would emphasize avoidance of impacts to plants, animals and fish. Where complete avoidance may not be possible the minimization of these impacts would be stressed. Impacts would be mitigated and enhancement measures implemented, as appropriate.

3. How would the proposal be likely to deplete energy or natural resources?

Water system components could consume, but not deplete, energy and natural resources.

Proposed measures to protect or conserve energy and natural resources are:

System components would be sited, designed, constructed, maintained and operated to be as efficient as possible.

4. How would the proposal be likely to use or affect environmentally sensitive areas or areas designated (or eligible or under study) for governmental protection; such as parks, wilderness, wild and scenic rivers, threatened or endangered species habitat, historic or cultural sites, wetlands, floodplains, or prime farmlands?

None of the proposed water system components are or would be located on prime farmlands, wild and scenic rivers or wilderness areas. It is possible that some components could be located on or near environmentally sensitive areas. Pipelines could be routed through wetlands or floodplains. Parks, endangered species habitat and historical or cultural sites would be avoided wherever possible.

Proposed measures to protect such resources or to avoid or reduce impacts are:

System components would be sited with the intent to avoid any environmentally sensitive areas. If use of any of these areas were necessary the impact of construction activities would be minimized. Possible minimizations include avoiding construction of above ground facilities in flood plains, using trenchless technologies for crossing fish bearing water courses and observing fish windows for work below the ordinary high water mark.

5. How would the proposal be likely to affect land and shoreline use, including whether it would allow or encourage land or shoreline uses incompatible with existing plans?

Water system components would not affect land and shoreline use nor allow or courage land or shoreline use that is incompatible with existing plans.

Proposed measures to avoid or reduce shoreline and land use impacts are:

System components would comply with existing land use and shoreline management plans. Construction of facilities in shoreline areas would be avoid whenever possible.

6. How would the proposal be likely to increase demands on transportation or public services and utilities?

The construction, maintenance and operation of water system components identified in the WSP would, to a varying degree, increase the demands on transportation, public services and utilities. The increase should be insignificant with the possible exception of the need for electrical power associated with the operation of pumps and water treatment equipment.

Proposed measures to reduce or respond to such demand(s) are:

Modern "state of the art" equipment would maximize efficiency and minimize power consumption for components with higher demands. In addition, for pipelines, alignments would be chosen to maximize the use of gravity flow and minimize the need for pumps to move water through the system.

7. Identify, if possible, whether the proposal may conflict with local, state, or federal laws or requirements for the protection of the environment.

Water system projects identified in the WSP do not and will not conflict with local, state or federal laws or requirements for the protection of the environment.

APPENDIX G

Water Use Efficiency Program

WATER USE EFFICIENCY PROGRAM

INTRODUCTION

The City of Marysville (City) recognizes that water is a valuable and essential natural resource that needs to be used wisely. This Water Use Efficiency (WUE) program provides an approach to increase water use efficiency within the City's water service area.

BACKGROUND

THE WATER USE EFFICIENCY RULE

In September 2003, the Washington State Legislature passed the Municipal Water Supply – Efficiency Requirements Act, also known as the Municipal Water Law. The Municipal Water Law required the state to implement the WUE Rule. The intent of this rule is to help reduce the demand that growing communities, agriculture, and industry have placed on our state's water resources, and to better manage these resources for fish and other wildlife. Municipal water suppliers are obligated under the WUE Rule to enhance the efficient use of water by the system and/or its consumers.

The WUE Rule applies to all municipal water suppliers and requires suppliers to:

- Develop WUE goals through a public process and report annually on their performance;
- Maintain distribution system leakage at or below 10 percent of production;
- Meter all existing and new service connections;
- Collect production and consumption data, calculate distribution system leakage (DSL), and forecast demands;
- Evaluate WUE measures; and
- Implement a WUE program.

WATER USE EFFICIENCY PROGRAM REQUIREMENTS

The *Water Use Efficiency Guidebook,* originally published by the Washington State Department of Health (DOH) in July 2007 and revised in January 2009 and January 2011, identifies the water use reporting, forecasting, and efficiency program requirements for public water systems. A WUE program meeting these requirements is a necessary element of a water system plan as required by the DOH and is necessary to obtain water right permits from the Washington State Department of Ecology (Ecology). The *Water Use Efficiency Guidebook* defines the necessary components of a WUE program as the following four fundamental elements.

1. Planning requirements that include collecting data, forecasting demand, evaluating WUE measures, calculating DSL, and implementing a WUE program to meet goals.
2. A DSL standard of 10 percent or less based on a 3-year rolling average. For systems with less than 500 connections, the DSL standard may be increased to 20 percent if a request with supporting data is provided to the DOH.

3. Goal setting to provide a benchmark for achievement and to help define the success of the WUE program.
4. Annual performance reporting on progress towards meeting WUE goals.

WATER SUPPLY CHARACTERISTICS

Water in the City's system is supplied by both Marysville-owned sources and from Everett. Everett's water supply comes from the Sultan River. Marysville-owned sources include the Lake Goodwin Well, Edward Springs and Wells, the Stillaguamish River Ranney Collector, Sunnyside Wells No. 1R and 2, and the Highway 9 Well. The Highway 9 Well and Sunnyside Wells are currently offline for water quality purposes, however the Sunnyside Wells will be operational once their water treatment facility is completed in 2017.

A summary of the Marysville-owned sources is shown in **Table 1**, and a more detailed description of each source of supply is provided in **Chapter 2** of the City's *Water System Plan* (WSP).

Table 1
Supply Facilities Summary

Well	Pressure Zone	Year Installed	Use	Existing Pumping Capacity (gpm)	Well Depth (feet)	Well Diameter (inches)	Pump Type	Pump Motor Size (hp)	Water Treatment
Stillaguamish Ranney Well Collector	240 Zone	1978	Active	2,250	n/a	n/a	(2) Submersible	(2) 100	Membrane, Chlorine
Edward Springs Spring Source	240 Zone	1930s	Active	760	n/a	n/a	Centrifugal	(2) 3	Chlorine, UV
Edward Springs Well No. 1R	240 Zone	2008	Active	170	182	12	Submersible	15	Chlorine
Edward Springs Well No. 2	240 Zone	Prior to 1960[1]	Active	225	150	unknown	Submersible	15	Chlorine
Edward Springs Well No. 3	240 Zone	1987 [1]	Active	300	181	unknown	Submersible	25	Chlorine
Lake Goodwin Well	460 Zone	1970	Active	350	450	unknown	Vertical Turbine	50	Chlorine
Highway 9 Well	510 Zone	1981	Offline[2]	n/a	270	unknown	n/a	n/a	n/a
Sunnyside Well No. 1R	360 Zone	2009	Offline[2]	n/a	278	16	n/a	n/a	n/a
Sunnyside Well No. 2	360 Zone	1965	Offline[2]	n/a	328	16	Vertical Turbine	100	n/a

1 = Rehabilitated in 2004.
2 = Currently offline for water quality purposes.

The City currently holds one water right permit and eleven water right certificates for its independent sources of municipal water supply. In addition, the City has water available to from the City of Everett through a Joint Operating Agreement (JOA) which is provided through the JOA supply pipeline. A summary of these water rights is presented in **Table 2**. Additional water rights information for each source may be found in **Chapter 6** of the WSP and on the certificates, permits, and water rights self-assessment, which are included in **Appendix J**.

Table 2
Existing Water Rights and Interties

Water Right	Document	Use	Source Name	Instantaneous Rate (gpm)			Annual Volume (afy)		
				Additive	Non-additive	Maximum From Source	Additive	Non-additive	Maximum From Source
SWC 184	Certificate	*Mitigation*	Edward Springs	*200*	*0*	1,392	*108.3*	*0*	2,232
		Municipal		160	0		467.7	0	
SWC 2180	Certificate	Municipal		1,032	0		1,656	0	
GWC 286	Certificate	Municipal	Edward Springs Well No. 1R	300	0	300	160	0	480
GWC 1152	Certificate	Municipal		0	300		0	320	
GWC 2096	Certificate	Municipal	Edward Springs Well No. 2	500	0	500	0	800	800
GWC 4155	Certificate	Municipal	Cedarcrest La Joy Well	57	0	57	0	91	91
GWC 3100	Certificate	Municipal	Sunnyside Well No. 1R	1,000	0	1,000	0	1,344	1,344
GWC 5469	Certificate	Municipal	Sunnyside Well No. 2	1,000	0	1,000	0	1,176	1,176
GWC 6980	Certificate	Municipal	Lake Goodwin Well	550	0	550	880	0	880
G1-00675C	Certificate	Municipal	Stillaguamish River Well	2,250	0	2,250	3,600	0	3,600
G1-23487C	Certificate	Municipal	Highway 9 Well	1,000	0	1,000	1,600	0	1,600
G1-25182P	Permit	Municipal	Edward Springs Well No. 3	400	0	400	0	451	451
			Mitigation Peak/Total	*200*	*0*		*108.3*	*0*	
			Municipal Peak/Total	**8,249**	300		**8,363.7**	4,182	
			Water Right Total	8,449	300		8,472	4,182	
			JOA Supply Line (Everett Intertie)	9,132		9,132	14,730		14,730
			Municipal Grand Total	**17,381**			**23,093.7**		

Notes:
-Takes into account mitigation requirement under SWC 184 and that that rate and volume is not available for municipal supply.
-Considers full Edward Springs surface rights to equal combined 3.1 cfs.
-0.8 cfs = 360 gpm
-2.3 cfs = 1,032 gpm
-Table represents peak usage periods of July 1 through September 30 when 200 gpm from SWC 184 is bypassed to Cougar Creek.
-8,472 afy total annual volume from Pollution Control Hearings Board Stipulation and Agreed Order of Dismissal for Case No. 96-153.
-The JOA Pipeline supplies water from the City of Everett regional water system.

Sources of water derive from recharge of precipitation into aquifers that discharge to City-owned wells and springs, as well as area streams and rivers. Groundwater recharge to the City's sources of supply occurs within the Stillaguamish River watershed (Water Resources Inventory Area (WRIA) 5) and the Snohomish River watershed (WRIA 7) and these sources are beneficially used within both WRIA 5 and WRIA 7.

Some of the sources of supply are located in the Snohomish basin, one of the 16 fish-critical basins identified through the Statewide Salmon Recovery Strategy. The City water rights are senior to the instream flow rules (Washington Administrative Code 173-507 and 173-505) and not subject to limitation by stream flow in the Snohomish or Stillaguamish River or their respective tributaries. The Snohomish River Basin Salmon Conservation Plan (2005) has identified water quantity in the Snohomish River Basin as a concern for sustainable fish populations. The Stillaguamish River Watershed Chinook Salmon Recovery Plan (2005) has identified increasing stream flow during the summer as a goal to improve habitat conditions for Chinook salmon, a species designated as Threatened under the Endangered Species Act in the Stillaguamish Basin.

Environmental factors such as drought and climate change could have a negative effect on recharge to the aquifers. With the exception of some undocumented reports of water level issues in private wells surrounding the Highway 9 Well (currently offline), there are no known issues with declining groundwater levels.

WATER USE EFFICIENCY PROGRAM

As previously described, the fundamental elements of a WUE program include planning requirements and DSL standards, as well as goal setting and performance reporting. The City's water use data, demand forecasts and other planning requirements are contained in **Chapter 4** of the WSP. The City is committed to continue collecting water use data beyond that presented in **Chapter 4** for evaluation of its WUE program and water use patterns, and for forecasting demands for future facilities. The City's WUE program that follows includes a statement of its goals and objectives, the evaluation and selection of alternative efficiency measures, the schedule and budget, and the method of program monitoring.

WATER USE EFFICIENCY GOALS AND THE PUBLIC PROCESS

Per Washington Administrative Code (WAC) 246-290-830, WUE goals must be set through a public process and shall be evaluated and reestablished a minimum of every 6 years. In compliance with the WUE Rule, public hearings were held on June 23rd and July 27th, 2009, to present and discuss goals. Background on the City's WUE program, water supply characteristics, water demand forecasts, and other elements were made available 2 weeks prior to the public forum date. All comments received at the forum were reviewed and considered by the City. The City's current WUE goals were adopted by the City in 2009. In the future, WUE goals will be evaluated and reestablished during the water system planning process, or at minimum of every 6 years.

Based on the successful implementation of the current WUE program, the City achieved the goal adopted in 2009. The 2009 goal was to save 129,000 gpd on an annual basis at full implementation of the six year program (2014). The projected 2014 average day demand with conservation from the 2009 WSP was 12.2 MGD. The actual 2014 average day demand, as listed in **Chapter 4**, was approximately 6.7 MGD. A new goal has been proposed based on the demand analysis and projections presented in the City's updated WSP. It is anticipated that the proposed goals will be adopted along with the WSP at a regularly scheduled City Council meeting. Prior to adoption of the goals, a public notice will be posted at least 2 weeks before a City Council meeting public forum for presenting and considering public comments.

The proposed goals and objectives of the City's WUE program consist of:

- Reduce the system-wide average daily demand by 7.1 percent by 2035, and maintain this reduction through 2036 (the end of the 20-year planning period).

This goal is based on the City of Everett's goal to reduce the average daily demand projection in 2035 from 80.6 MGD to 74.9 MGD, a 7.1 percent reduction.

The City will achieve these goals and objectives through the implementation of the WUE program that follows.

EVALUATION AND SELECTION OF WATER USE EFFICIENCY MEASURES

The City's evaluation of WUE measures and selected levels of implementation are presented within this section. The measures fall within three categories of implementation: 1) mandatory measures that must be implemented; 2) measures that must be evaluated; and 3) additional measures selected by the City that must be either evaluated or implemented.

The City served an average of 20,376 water service connections in 2014. Based on the number of connections, at least nine WUE measures must be evaluated or implemented. Measures that are mandatory cannot be credited towards the system's WUE measures. Since the City implements the minimum number of required measures, a cost-effective evaluation is not required.

Mandatory Measures

Source Meters

The volume of water produced by the system's sources must be measured using a source meter or other meter installed upstream of the distribution system. Source meters are currently installed and operating at each of the City's sources. If any new sources are installed in the future, they will be equipped with a source meter.

Service Meters

All public water systems that supply water for municipal purposes must install individual service meters for all water users. Service meters are currently installed and operating at all connections throughout the distribution system. All future connections that are installed or activated will be equipped with a service meter.

Meter Calibration

The City must calibrate and maintain meters based on generally accepted industry standards and manufacturer information. Compliance will be maintained by the City by performing maintenance on the source and service meters every 5 to 10 years at a minimum. Meter calibration verification testing is performed on an as-needed basis, typically annually.

Water Loss Control Action Plan

To control leakage, systems that do not meet the DSL standard must implement a Water Loss Control Action Plan (WLCAP). As shown in **Chapter 4**, the City's DSL has consistently been negative, which indicates inaccuracy in the production or consumption data available. The City suspects the error is due to inaccuracy at the production meters (specifically the Everett Intertie meter) and will continue to work towards resolving these inaccuracies. The City will also work to improve recordkeeping for authorized water consumption uses such as construction, flushing, and firefighting activities to reduce the amount of DSL in the system. The City owns leak detection equipment and performs periodic leak detection surveys to monitor performance of various parts of the system. Leak detection was conducted on the transmission main that runs from the Stillaguamish Ranney Well to the Stillaguamish WTP in 2008; no leaks were found.

Customer Education

Annual customer education regarding the importance of using water efficiently is a required element of all WUE programs. Customer education is provided in the City's annual Consumer Confidence Report (CCR) to customers and includes information on the system's DSL, progress towards meeting WUE goals, and tips for customers on using water more efficiently.

Measures That Must Be Evaluated

Rate Structure

A rate structure that encourages WUE and provides economic incentives to conserve water must be evaluated, but is not required to be implemented. The City's current utility rates are designed to discourage excessive water use. A base water rate is charged, depending on the meter size, regardless of consumption. An increasing block rate structure imposes a unit charge for water use which increases as the volume of water consumed increases.

Reclamation Opportunities

The City evaluated reclamation opportunities as part of the 2011 Sewer Comprehensive Plan. This effort determined that reclaimed water could potentially be used in the City for industrial cooling water, irrigation/landscaping use, fire protection, ground water recharge, and other possibilities. However, it was determined that the cost of producing reclaimed water would be over three times the cost of potable water, so production and use of reclaimed water was determined to be economically unfeasible.

Selected Measures

The City has chosen to implement seven different WUE measures in addition to those that are mandatory or required to be evaluated. Because several of these WUE measures affect multiple customer classes (detailed below), the City's WUE program counts as 14 WUE measures, which is greater than the requirement of nine WUE measures based on the number of service connections.

Water Bill Showing Consumption History

The City currently shows historical consumption data for the previous 12 billing cycles on customer bills. Since this measure is implemented for three customer classes (single-family, multi-family, and commercial/other), it counts as three WUE measures for the City's program.

Notifying Customers about Leaks on Their Property

The city has an automated meter infrastructure (AMI) system that gathers meter readings from each meter at least twice daily. When consumption over a 24-hour period is greater than anticipated, the AMI system generates an alarm code that is viewed by the utility billing and meter reader/repair personnel. Follow up is conducted in the field to verify the presence of a leak. If it appears there is a leak on the customer's side of the meter, they are advised of the situation and asked to make repairs. Since the City notifies customers in three customer classes (single-family, multi-family, and commercial/other) of unusual high meter readings, it counts as three WUE measures for the City's program.

Toilet/Shower/Washer Rebates

The City offers rebates of up to $50 to single-family customers who install low-flow toilets, low-flow showers, or tumble action washers. Since this measure is implemented for the single-family customer class only, it counts as one WUE measure for the City's program.

Indoor Retrofit Kits

The City has offered free indoor water conservation kits to residential customers since 2001. The kits may include a low-flow showerhead, a kitchen faucet aerator, two bathroom faucet aerators, a toilet tank water displacement bag, toilet leak detection tablets, a gauge to measure losses from household leaks, and a conservation brochure. Since this measure is implemented for the single-family customer class only, it counts as one WUE measure for the City's program.

Outdoor Irrigation Kits

The City has offered free outdoor water conservation kits to residential customers since 2001. The kits may include an automatic shut-off watering timer, a hose nozzle, a gauge to measure rainfall and/or sprinkler output, a package of hose washers to reduce leaks, and a conservation brochure. Since this measure is implemented for the single-family customer class only, it counts as one WUE measure for the City's program.

School-Based Education

The City participates in school-based education programs including classroom presentations, teacher workshops, and classroom educational materials. The classroom presentations are facilitated by trained instructors with curriculum designed for elementary, middle school and high school students. The presentations are marketed to teachers through newsletters and other communications. The teacher workshops assist teachers in educating students about water resource issues including conservation. Teachers participate in activities, experiments, and field trips and can receive continuing education credits or clock hours. The classroom educational materials include a broad collection of items such as books, videos, posters, and other supplies. Since this measure primarily affects residential water users (single-family and multi-family customer classes), it counts as two WUE measures for the City's program.

Public Outreach

The City engages in general public outreach intended to build and reinforce a water conservation ethic among customers. These outreach efforts include brochures, a summer watering calendar, transit advertising, and other regional efforts. Since this measure affects three customer classes (single-family, multi-family, and commercial/other), it counts as three WUE measures for the City's program.

WATER USE EFFICIENCY PROGRAM SCHEDULE AND BUDGET

The WUE measures described above and selected for implementation by the City are summarized in **Table 3** with their corresponding schedule and budget. Most of the water use efficiency activities are funded by the City's operations and maintenance budget and the City plans to fund water use efficiency activities, such as leak detection, as needed to meet the established goals. The successful implementation of this program is expected to reduce the system-wide average daily demand by 7.1 percent by 2035, and maintain this reduction through 2036, as shown in **Chart 1**.

Table 3
WUE Program Schedule and Budget

Water Use Efficiency Measure	Schedule	Budget
Mandatory Measures		
Source Meters	Ongoing	O&M Funded
Service Meters	Ongoing	O&M Funded
Meter Calibration	Ongoing	O&M Funded
Water Loss Control Action Plan/Leak Detection	Ongoing	O&M Funded
Customer Education - Annual Consumer Confidence Report	Ongoing	O&M Funded
Measures That Must be Evaluated		
Rate Structure	In Place	N/A
Reclamation Opportunities	2021/2031	Sewer CIP Funded
Selected Measures		
Water Bill Showing Consumption History	In Place	N/A
Notifying Customers about Leaks	Ongoing	O&M Funded
Toilet/Shower/Washer Rebates	Ongoing	O&M Funded
Indoor Retrofit Kits	Ongoing	O&M Funded
Outdoor Irrigation Kits	Ongoing	O&M Funded
School-Based Education	Ongling	O&M Funded
Public Outreach	Ongoing	O&M Funded

Chart 1
WUE Program Projected Water Savings

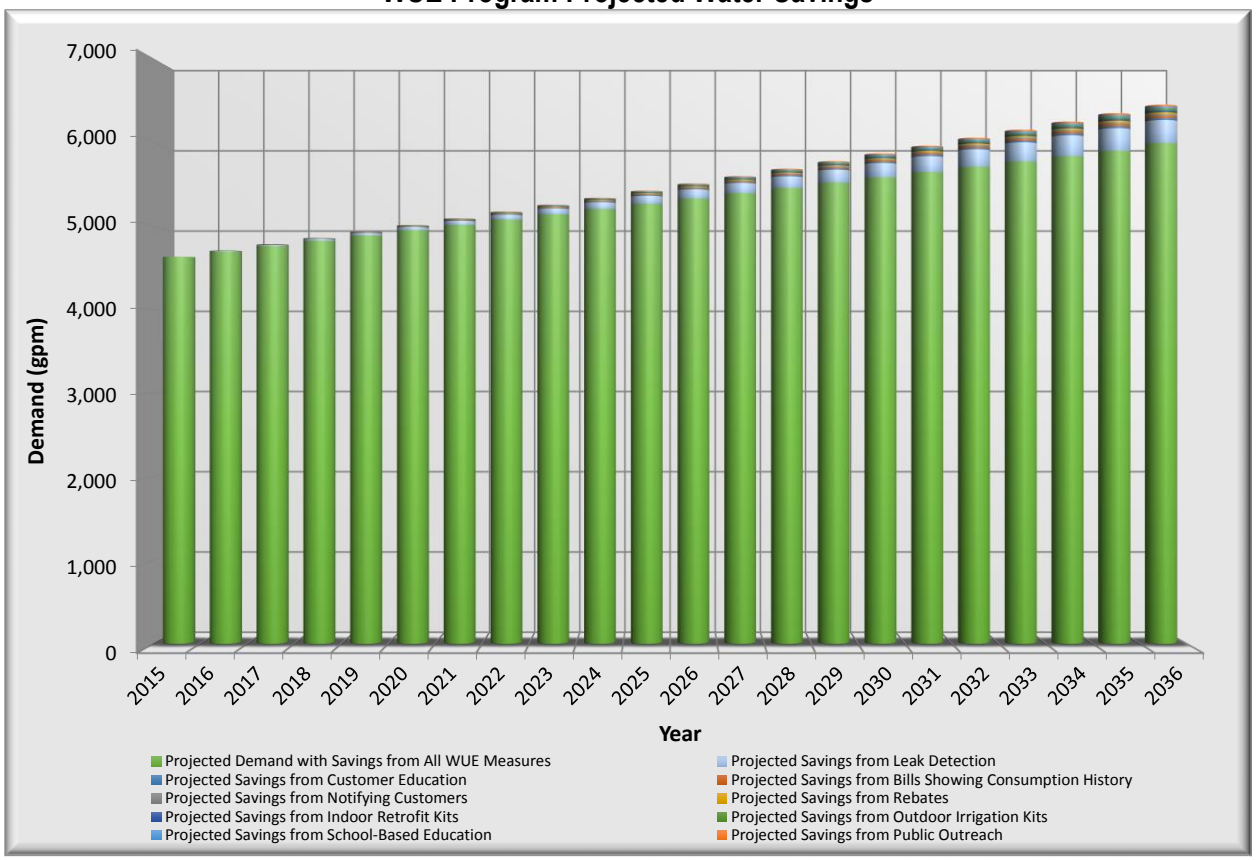

WATER USE EFFICIENCY PROGRAM EVALUATION AND REPORTING

The City will continue to evaluate overall demand, per capita and per ERU water use, and the amount of DSL on an annual basis. The City will evaluate the performance of its WUE program and implemented measures by analyzing demand data and determining the long-term trend towards reducing water usage and meeting WUE goals. If the program monitoring shows that progress towards meeting the WUE goals is not being accomplished, more rigorous program implementation or additional program items will be considered, along with a cost-effective evaluation of measures.

The City will continue to provide annual WUE performance reports to its consumers in the CCR, and will detail the results of water use monitoring and progress towards achieving the system's WUE goals. A copy of the City's current CCR is included in **Appendix N** of the City's WSP.

APPENDIX H

Cross-connection Control Program

CROSS-CONNECTION CONTROL PROGRAM

1. INTRODUCTION

Under Washington Administrative Code Chapter 246-290-490, *Cross-connection control*, water purveyors such as the City of Marysville (City) have the responsibility to protect water users from ill effects associated with contamination due to cross-connections. A cross-connection is any physical arrangement where the potable water supply is connected, directly or indirectly, to any liquid of unknown or unsafe quality so as to allow the liquid to contaminate the public water supply through backflow (reverse flow) from the customer's property or facility into the public water distribution system. In numerous incidents reported nationally, public water systems have been contaminated by cross-connections that resulted in serious injury and illness to the public.

Under the Washington Administrative Code (WAC), the City of Marysville Public Works Department (MPWD) is responsible for developing and implementing a comprehensive Cross-Connection Control Program (CCP) to eliminate or control cross-connections within the City's public water system. The program must satisfy certain minimum requirements as prescribed by WAC 246-290-490. Further, the Washington State Department of Health (DOH) must approve the City's CCP.

The purpose of this document is to describe established policies and practices that constitute the City's CCP. Program implementation is governed by the Marysville Municipal Code (Title 14, *WATER AND SEWERS*, Chapter 14.10 *WATER SUPPLY CROSS-CONNECTIONS*), which defines responsibilities of the City and of individual water system customers in accomplishing successful cross-connection control. Recommended updates to this portion of the City's municipal code are included as **Appendix A** in this document.

The primary audience for this CCP document is assumed to be MPWD employees who have experience with the City's water distribution system and who have been certified by DOH as a Cross-Connection Control Specialist (CCS).

2. PROGRAM PURPOSE AND POLICIES

2.1 PURPOSE

The purpose of Marysville's CCP is to identify and then eliminate or control any cross-connection to the City's public water system. These actions serve to protect the health of City water system consumers by ensuring the continued potability of water available from the City's distribution system.

2.2 POLICIES

It is the policy of the Marysville Public Works Department (MPWD) that the CCP meet the intent of all sections of the WAC pertaining to cross-connection control. WAC 246-290-490 (included as **Appendix B**) constitutes the DOH cross-connection regulations and related definitions governing Group A water systems.

The first priority of the CCP is to protect the public water distribution system from the categories of premises listed in Table 9 of WAC 246-290-490 (4) (b). MPWD will conduct health hazard evaluations as necessary to ensure the protection of the public water supply. The CCP mandates that new water

service connections be installed, and existing water service connections be modified, to conform to these requirements where applicable.

The CCP requires premise isolation commensurate with the degree of health hazard to the City's public water supply. Premise isolation involves installing an approved backflow prevention assembly at individual customer service connections. Backflow prevention assemblies used to isolate customer service connections must:

- Provide a level of protection commensurate with the assessed degree of hazard,
- Be selected to satisfy Local and State minimum standards,
- Be installed, inspected, and tested in accordance with CCP procedures and schedules.

2.2.1 Authority and Jurisdiction

The water system consists of two parts: the MPWD public water system and water customers' individual plumbing systems. The MPWD system consists of all water treatment, storage, and distribution facilities under the City's complete control. Customers' systems include point-of-use facilities located downstream of the City's individual service connections. MPWD responsibility for cross-connection control and backflow prevention covers the City's public water system only. Responsibility ends at the point of delivery to each customer's water system. The point of delivery is defined as the downstream end of the service connection water meter (or at the customer's property line, for any service connection that has no meter).

Under provisions of WAC 246-290-490, a water purveyor is not responsible for eliminating or controlling cross-connections within the consumers' water systems. That responsibility falls under the jurisdiction of a Local Administrative Authority (LAA) designated to administer and enforce the Uniform Plumbing Code (UPC) at the customer's property location. Typically, an LAA is a municipal or county building department. For customer properties located within Marysville City Limits, MPWD serves as water purveyor as well as LAA. For most water customer properties located outside the City Limits, the Snohomish County Building Division serves as LAA.

The Snohomish County Building Division also serves as LAA for customer water systems located within the Tulalip Tribe's Business Park under Chapter 19.27.050 of the Revised Code of Washington (RCW), *Enforcement*. That regulation requires that counties and cities enforce the state building code. Any county or city not having a building department must contract with another county, city, or inspection agency approved by the county or city for enforcement of the state building code within its jurisdictional boundaries.

2.2.2 Existing Backflow Prevention Assemblies

DOH revises the list of approved backflow prevention assemblies periodically to incorporate units with improved designs and to reflect field experience with previous installations. State regulations allow backflow prevention assemblies that were approved at the time they were installed but are not on the current list of approved assemblies to remain in service provided they are:

- Maintained,
- Commensurate with the degree of hazard,
- Inspected and tested at least annually, and have successfully passed the annual tests.

If an existing, unapproved assembly requires relocation or cannot be repaired using spare parts from the original manufacturer, the customer must replace it with one selected from the current list of approved assemblies.

If a water system protected by a backflow prevention assembly is modified to include components or operations that increase the assessed health hazard, the customer must replace the existing backflow prevention assembly with an approved assembly appropriate for the higher degree of hazard.

2.2.3 New Construction Compliance

The MPWD will not establish water service to new construction until the customer furnishes design, installation, inspection, and test data indicating that cross-connection control requirements have been satisfied.

2.2.4 Enforcement

To enforce compliance with the requirements of the CCP, the City reserves the right to correct an actual or potential cross-connection health hazard or to immediately disconnect a customer's water service if immediate remediation is not possible. Section 4.1.3 describes the City's options concerning remediation and disconnection.

2.2.5 Liability

The City assumes no liability for damages and makes no allowances for any loss of customer use, production, sales, services, or any other consequential damages that might arise from the implementation of any of the measures required by and/or contained in the CCP.

The CCP requires that a City employed CCS conduct certain assessments and evaluations of customer water systems and facilities. These activities are for the purpose of implementing the City's responsibility for protecting the public water supply system. Satisfactory findings associated with these activities are not to be construed by water system customers or regulatory agencies as absolute assurance of the absence of cross-connections within the customer systems. Similarly, satisfactory findings do not constitute City approvals of individual customers' plumbing systems.

3. PROGRAM IMPLEMENTATION

CCP implementation involves three basic functions:

- Assessment of actual or potential cross-connection health hazards posed by new and existing customer water systems and facilities,
- Codification and enforcement of regulations and requirements for cross- connection elimination or control,
- Verification of proper inspection and periodic testing for backflow prevention assemblies installed to control actual or potential cross-connections.

The following sections summarize the personnel and procedures the City employs in implementing the CCP.

3.1 PERSONNEL

The City of Marysville Director of Public Works is responsible for reviewing and approving CCP policies and for ensuring that the program meets Local and State regulations. The CCP Administrator holds primary responsibility for implementing the CCP on a daily basis. The CCP Administrator position, held by the City's Water Quality Supervisor, requires current DOH certification as a Cross-Connection Control Specialist (CCS) in accordance with WAC 246-292 (details on CCS qualifications are found in Element 4). The position also requires experience in Marysville water system operations. For help with record keeping and customer notifications, the CCS may request assistance from MPWD clerical staff.

CCP Administrator duties include:

- Screening applications for new water service
- Reviewing plans associated with new construction and remodels
- Determining appropriate backflow prevention requirements
- Conducting initial and follow-up on-site surveys of customer facilities
- Corresponding with customers affected by the CCP
- Reviewing backflow prevention assembly test results
- Maintaining CCP records
- Initiating CCP enforcement actions
- Diagnosing, investigating, documenting, and directing responses to backflow incidents
- Reviewing and updating assembly installation standards and procedures
- Developing materials used in consumer education
- Communicating with County and State health authorities

3.2 PREMISE ISOLATION

The CCP Administrator makes health hazard evaluations for new service connections by reviewing water service applications and by conducting on-site surveys during construction. On-site inspections of 3/4-inch and smaller service connections are not normally conducted unless cross-connections are suspected or identified based on a plan review. The CCP Administrator surveys existing service connections according to priority with the highest degree of hazard assigned the highest priority. Qualified MPWD personnel conduct periodic on-site evaluations, if allowed by customers, at facilities with the highest degree of hazard and at facilities where plumbing changes have been made or have a high potential for changes. When appropriate, the CCP Administrator, a designated City CCS, or a qualified City Plumbing Inspector evaluates individual properties or facilities to verify proper installation and/or operation of an appropriate backflow prevention assembly or air gap.

Whenever cross-connections cannot be eliminated or fully evaluated, the MPWD informs the customer of the City's backflow prevention requirements according to the degree of hazard as described in Elements 2, 3, and 10 (see **Section 4**).

City personnel certified as backflow assembly testers (BATs) perform testing and maintenance of backflow prevention assemblies owned by the City of Marysville. Backflow prevention assemblies

owned by City customers are the responsibility of the customer and must be tested by Washington State DOH certified BATs associated with private companies. City and customer testing and maintenance must be performed and documented in accordance with the requirements described in Element 5. Element 6 describes City procedures that assure proper testing.

Consumer education is a core element essential to the success of the City's Cross- Connection Control Program. Element 8 presents details of the City's approach to consumer education concerning cross-connection control.

The CCP Administrator collects and maintains CCP records as required by WAC 246-290-490(8). These records include information concerning the assessed health hazards associated with individual properties, facilities, and vehicles and the backflow prevention assemblies and/or air gaps used to isolate the associated service connections. For example, the records include detailed installation, inspection, and testing histories for each known backflow assembly or air gap. The records also include copies of routine and special reports generated to document the CCP. Critical records are kept in original paper format. Routine records and reports are accumulated into an electronic database. All program records are available to the DOH for review on request. Element 9 describes the CCP recordkeeping system in detail.

3.3 FIRE HYDRANT UTILIZATION PROGRAM

Construction contractors and other City water customers occasionally have a need to withdraw water from a City fire hydrant on a temporary basis. Withdrawal can involve filling tanker trucks and/or direct hose or pipe connections to the hydrant. The City allows this temporary use of fire hydrants provided that users comply with terms prescribed by the City's Fire Hydrant Utilization Program.

To implement and monitor the Utilization Program, the City issues two types of permits. A Vehicle Permit allows a customer to fill tank trucks from designated hydrants located throughout the City's service area. A Site Permit allows a customer to withdraw water from a specific hydrant, typically in association with a construction project. Any City employee who observes a customer or other private party operating a hydrant without displaying evidence of a valid Vehicle or Site Permit is obligated to report the observation to the Director of Public Works for investigation. Appendix C presents the Fire Hydrant Utilization Program, including sample forms, sample notification letters, and a sample fee schedule.

3.4 INTERESTED ORGANIZATIONS

- The City of Marysville (City)
- Marysville Public Works Department (MPWD)
- Marysville Parks and Recreation Department
- Snohomish County Building Division
- Snohomish Health District (SHD)
- City of Arlington (LAA)
- Tulalip Tribe Business Park water customers
- City water customers that require backflow protection

- City water customers who hold permits to withdraw water from fire hydrant on a temporary basis

3.5 COORDINATION AGREEMENTS

WAC 246-290-490 requires that water purveyors coordinate with the respective local administrative authorities in all matters concerning cross-connection control and that the purveyors document and describe such coordination. The City plans to accomplish this requirement in 2002 by formalizing coordination agreements.

Specifically, the MPWD intends to develop written cross-connection control agreements with the Marysville Fire District, the Snohomish County Building Division, the Tulalip Tribe, and the Snohomish Health District. To date, cooperation between these entities has been satisfactory. Thus, no problems are anticipated in developing satisfactory agreements. When completed, the CCP Administrator will incorporate copies of these agreements into **Appendix D**.

4. DETAILED PROGRAM ELEMENTS

State regulations mandate that the City's Cross-Connection Control Program include certain minimum functions or elements. Those elements are prescribed in WAC 246-290-490(3). The following sections describe these elements and the procedures the City uses or intends to use to implement them. Underlined text indicates requirements extracted directly from WAC 246-290-490.

4.1 ELEMENT 1: ESTABLISH LOCAL AUTHORITY

<u>Adopt an ordinance, code, or other legal instrument that:</u>

- <u>Establishes the City's legal authority to implement a cross-connection control program (CCP),</u>
- <u>Describes the operating policies and technical provisions of the CCP,</u>
- <u>Describes corrective actions available to the City for use in ensuring that consumers comply with the CCP requirements.</u>

4.1.1 City Ordinances

City of Marysville ordinances related to cross-connection control are presented in the Marysville Municipal Code Title 14, *WATER AND SEWERS*, Chapter 14.10, *WATER SUPPLY CROSS-CONNECTIONS*. **Appendix A** presents recommended updates for Chapter 14.10 to align the code with this CCP. This ordinance provides the basis for CCP policies and provisions.

4.1.2 Other Authority

State Cross-Connection Regulations and Related Definitions – Washington Administrative Code (WAC) Chapter 246-290-490 (included as **Appendix B**) specifies DOH cross-connection regulations and related definitions governing Group A water systems. The City takes guidance from and enforces compliance with these regulations.

Uniform Plumbing Code - In reviewing and approving building permits and in conducting construction inspections, the MPWD applies the current edition of the Uniform Plumbing Code (UPC). Thus, a customer's water system must comply with the UPC in terms of cross-connection abatement requirements.

Design and Construction Standards - The City's Design and Construction Standards and Specifications prescribe installation requirements for backflow prevention assemblies. These City standards are based on recommendations cited by DOH in WAC 246-290-490(2)(b) and as provided in the current edition of the *Cross-Connection Control Manual, Accepted Procedure and Practice* published by the Cross-Connection Control Committee of the Pacific Northwest Section of the American Water Works Association (PNWS-AWWA).

4.1.3 Enforcement

To enforce compliance with the requirements of the CCP, the City reserves the right to install a backflow prevention assembly at the service connection or immediately disconnect a customer's water service if the City determines that an actual or potential cross-connection health hazard exists. Five (5) days prior to disconnection, the City will deliver written notice to the customer by posting a Termination Notice on the front door of the property.

Reasons for disconnecting water service could include:

- Customer's refusal to install an approved backflow prevention assembly as directed by the City, the SHD, or the DOH,
- Customer's failure to have the backflow prevention assembly inspected and tested per City requirements,
- City's discovery that an existing backflow prevention assembly is the wrong type, is defective, or is installed improperly,
- City's discovery of an immediate health hazard cross-connection to the City's water system.

In the event that a customer fails to abate an existing cross-connection within a prescribed time period, the City may abate the cross-connection by installing an approved backflow prevention assembly at the service connection or disconnect water service to the premises immediately. If either of these procedures is necessary, the City will charge to the property all associated labor and administrative costs and will enforce payment in the same manner as for other City utility rates and charges. If disconnection is necessary, the City will not restore water service until the customer has complied with the backflow program requirements and paid any delinquent rates, charges (including meter reinstallation charges), and fines.

4.2 ELEMENT 2: EVALUATE SERVICE CONNECTION HAZARDS

Develop and implement procedures and schedules for evaluating new and existing service connections to assess the degree of hazard each poses. Notify individual consumers of the results within a reasonable time frame.

4.2.1 Health Hazard Designation

WAC 246-290-490 mandates that certain categories of properties or facilities install backflow prevention assemblies or air gaps (or in some cases both) at the service connection appropriate to protect the City's public water system from the actual or potential degree of hazard. The requirement for a given facility or property can be waived when, in the judgment of the City and DOH, no hazard exists. The core list of categories is listed in Table 9 of WAC 246-290-490 (4) (b). This CCP expands that list to include other types of customer water systems as indicated in **Table 4-1** below.

Table 4-1
Required Backflow Prevention Assemblies for Premises, Facilities, and Processes Requiring Mandatory Service Protection

Premises Category or Activity	Presumed Health Hazard	Minimum Required Protection
Car washes	High	RPBA
Chemical plants (including ice manufacturing plants and battery manufacturing or repair facilities)	High	RPBA
Food processing plants (e.g., canneries, packing houses, slaughter houses, cold storage plants)	High	RPBA
Beverage bottling plants	High	RPBA
Film processing facilities	High	RPBA
Hospitals, medical centers, medical/dental clinics, veterinary clinics, nursing homes, blood plasma centers	High	RPBA
Laboratories	High	RPBA
Metal plating industries	High	RPBA
Mortuaries	High	RPBA
Premises with irrigation systems that use City water in combination with chemical addition (e.g., parks, playgrounds, mobile home/RV parks, golf courses, cemeteries, and estates)	High	RPBA
Petroleum processing or storage plants	High	RPBA
Piers and docks (e.g., graving docks, boat marinas, dry docks)	High	RPBA
Commercial laundries and dry cleaners	High	RPBA
Properties where hazard survey access is restricted or denied	High	RPBA
Premises with unapproved auxiliary water supply interconnected with the potable water supply	High	RPBA
Radioactive material processing plants or nuclear reactors	High	AG Note 1
Wastewater and/or sewage treatment plants	High	AG Note 1
Wastewater lift stations and pumping stations	High	RPBA
Agricultural facilities (e.g., farms, dairies)	High	RPBA
Premises where both reclaimed water and potable water are provided	High	RPBA
All properties classified as Commercial (including shopping centers)	High	RPBA
Premises having boilers, heat exchangers, solar water heaters, swimming pools, spas, ponds, irrigation systems (with no chemical addition), etc.	High	RPBA
Premises having an auxiliary water supply and having internal cross-connections that are not correctable	High	RPBA
Premises that handle any substance that is objectionable (not a health hazard) in a manner that poses a potential cross-connection	Low	DCVA
Premises having low health cross-connection hazards that are unavoidable or not correctable (e.g., buildings over 30 feet tall)	Low	DCVA
Premises having a repeated history of cross-connections being established or re-established	High	RPBA
Premises with activities that involve toxic substances and/or materials dangerous to health	High	RPBA
Premises with approved auxiliary water supplies	Low	DCVA

Residential flow-through or combination fire protection systems constructed of potable water piping and materials	Low	Not Required
Privately owned fire hydrants and/or service connections with fire protection systems other than flow-through or combination systems that	Low	On-site DCVA
Premises with fire sprinkler systems that utilize anti-freeze, chemical additives, or auxiliary water supplies	High	RPBA (or RPDA)
Premises that practice graywater use and/or stormwater reuse	High	RPBA
Premises with irrigation systems that use City water only, with no chemical addition	Low	DCVA
Recreational Vehicle Parks	High	RPBA
New Water Main Construction	High	RPBA
Premises having complex plumbing arrangements and/or plumbing potentially subject to frequent changes that make it impracticable to assess whether cross-connection hazards exist or may exist in the future	High	RPBA

Notes:
1. Or an RPBA plus an in-plant AG
2. Or a DCDA

Definitions
AG approved air gap
DCDA double check detector assembly
DCVA double check valve assembly
RPBA reduced pressure backflow assembly
RPDA reduced pressure detector assembly

As mentioned previously, a cross-connection hazard assessment may determine that no hazard exists for an existing or proposed service connection to an individual facility of the type listed in **Table 4-1**. In those cases, the CCP Administrator must document, on a case-by-case basis, the reasons for the no-hazard assessment and include the documentation in the next *Annual Cross-Connection Control Summary Report*. Details for those facilities are kept on file, and the CCP Administrator assigns a high priority to those facilities for future re-evaluation.

At a minimum:

a. For new connections made on or after the effective date of these regulations, conduct initial evaluations before providing water service.

In the course of issuing building permits, MPWD personnel review plans and specifications for projects involving new water services (or changes to existing water services) to determine whether those projects pose a potential for cross-connection. These reviews also evaluate the availability of auxiliary water supply and the handling of substances that, if introduced into the water supply, would constitute a health hazard.

During the construction phase of any new building, structure, or ground installation, and during the regular plumbing inspection, the CCS or a qualified Building Inspector conducts a cross-connection control evaluation. Upon completion of the plumbing inspection, but prior to activating a water service connection, the CCP Administrator must acknowledge that a cross-connection control evaluation has been made and that a backflow prevention assembly is or is not required. The customer must install, inspect, and test any required backflow prevention assembly before MPWD completes the new service connection.

b. For existing connections made prior to the effective date of these regulations, conduct initial evaluations in accordance with a schedule acceptable to DOH.

The CCP Administrator establishes the priority for initial Health Hazard Evaluations and repeat evaluations of existing premises based on the risk management policies established by the City, and the minimum requirements imposed by DOH. The CCP Administrator or a designated CCS conducts an initial assessment of health hazards for existing buildings, structures, and grounds based on available information. If there is an identified health hazard and no premise isolation (i.e., service connection backflow preventer), the CCS follows up by contacting individual customers to obtain additional information and/or to schedule on-site evaluations to determine if adequate cross-connection control exists within the premise (see Section 4.2.2 for details). First priority for these evaluations is given to facilities of the type specified in Table 9 of WAC 246-290-490 (4) (b). This is a list of facilities for which the State has mandated cross-connection control.

An authorized City CCS will conduct an initial health hazard evaluation of the premise. The CCS coordinates with the LAA regarding in-premise protection for properties located outside the City limits. For properties located within City Limits, the City acts as both the water purveyor and the LAA. The CCS will document the results of the evaluation in a Health Hazard Evaluation Report.

If a backflow prevention assembly is needed, the CCS notifies the CCP Administrator. The CCP Administrator issues compliance letter 333 and a copy of the Health Hazard Evaluation Report to the property owner.

After notification, the customer must install an approved backflow prevention assembly within 90 days.

On the designated completion date, the CCP Administrator will ensure that the customer has completed the necessary corrective action. If corrective action has not been completed, the CCP Administrator will send the customer a warning letter, which designates a final compliance date for corrective action. On the final compliance date, the CCP Administrator will determine whether corrective action has been completed. If not completed, the CCP Administrator will begin the process of either installing (via City employees or a contractor) an approved backflow prevention assembly at the service connection or disconnecting the customer's service. When a customer's service is to be disconnected, the Director of Public Works will authorize the CCP Administrator to prepare and post a Termination Door Tag at the property. The Door Tag will include wording that:

- Identifies the property and the owner/customer of record,
- States the basis for noncompliance of the property with the City's CCP requirements,
- Warns the customer that service is to be disconnected five days after the Door Tag posting date,
- Advises the customer that disconnection can be prevented if the customer provides proof of compliance with the CCP requirements within the five- day period,
- Advises the customer that, after disconnection, service will not be restored until the customer provides proof of compliance with the CCP requirements.

In accordance with WAC 246-290-490, the Director of Public Works will notify the LAA before disconnecting a customer's water service.

4.2.2 On-site Health Hazard Evaluation Procedure

Step 1

The CCP Administrator sends the customer a letter, *On-Site Cross-Connection Health Hazard Evaluation Scheduling*. The letter requests that the customer contact MPWD to schedule an on-site evaluation. If the customer responds to the letter, the CCP Administrator schedules an evaluation and proceeds with Step 3 below.

If the customer does not respond to the letter, the CCP Administrator proceeds with Step 2 below.

Step 2

The CCP Administrator sends the customer a warning letter, *FINAL NOTICE - Cross-Connection Evaluation Scheduling*, via Certified Mail, Return Receipt Requested. If the customer responds to the warning letter, the CCP Administrator schedules an evaluation and proceeds with Step 3 below.

If the customer does not respond to the warning letter, the CCP Administrator begins the process of either installing (via City employees or a contractor) an approved backflow prevention assembly at the service connection or disconnecting the customer's service. When a customer's service is to be disconnected, the Director of Public Works authorizes the CCP Administrator to prepare and post a Termination Door Tag at the property. The Door Tag includes wording that:

- Identifies the property and the owner/customer of record,
- States the basis for noncompliance of the property with the City's CCP evaluation requirements,
- Warns the customer that service is to be disconnected five days after the Door Tag posting date,
- Advises the customer that disconnection can be prevented if the customer contacts the CCP Administrator and schedules an evaluation to be completed within the five-day period,
- Advises the customer that, after disconnection, service will not be restored until the customer's water system has been evaluated and demonstrated to be in compliance with the CCP requirements.

In accordance with WAC 246-290-490, the Director of Public Works notifies the LAA before disconnecting a customer's water service.

Step 3

Having been given permission by the customer, on the appointed date, the CCP Administrator or another City CCS conducts a health hazard evaluation of the customer's water system and facility. The process involves:

- Meeting the customer at the property,
- Obtaining and reviewing copies of system and/or facility drawings,
- Taking notes,

- Making field sketches of all lines and connections, except where intricate plumbing arrangements make sketching impractical (in these cases, the CCS will request that the customer provide a drawing that depicts the existing plumbing system and its components including pipe segments, valves, and fittings),
- Answering any questions the customer may have about the inspection process,
- Briefing the customer regarding preliminary findings.

The evaluation includes a thorough physical survey of all exposed piping. Underground facilities are verified to the extent possible. The evaluator follows each line to its end point and determines whether there are any actual or potential cross-connections or other conditions with potential for contaminating the City's water system.

After assessing evaluation results, the CCP Administrator prepares a Health Hazard Evaluation Report. The report:

- Identifies the property, the customer, and the owner,
- Lists locations and optional methods for controlling any existing cross- connections,
- Identifies the use and evaluates the probability of cross-connection for all industrial fluids, chemicals, or other contaminating liquids used or pumped under pressure at the facility,
- Includes copies of any drawings, sketches, documents, etc. that were used to support the hazard evaluation,
- Summarizes the hazard evaluation results,
- Describes any required or recommended customer actions.

The CCP Administrator adds the completed report to the CCP database and submits a copy to the Director of Public Works. The CCP Administrator also prepares and sends a letter to the customer that outlines the findings of the report, specifies any corrective action required, and establishes a time limit (normally 90 days) for the customer to complete the action. For evaluations that require customer action, copies of the letter and report are sent to the Public Health Officer, the Building Department, and to the CCP suspense file by date corrective action is to be completed.

The Health Hazard Evaluation Report includes wording to inform the customer that the evaluation of the premises is for the purpose of implementing the City's minimum requirements for protecting the public water supply system, commensurate with the City's assessment of the degree of health hazard. Further, the wording warns the customer that the City backflow prevention assembly survey requirements, or other actions by City personnel, do not constitute approval of the customer's plumbing system or assurance of the absence of cross-connections.

On the corrective action completion date, the CCP Administrator reviews the property file and/or re-evaluates the property to determine whether required corrections have been completed. If all required actions have been completed, a record of the corrections is added to the CCP database. If corrections have not been completed, the CCP Administrator reports the results of the determination to the Director of Public Works who initiates enforcement action as appropriate under the provisions of the City ordinance and/or DOH regulations (see Section 4.2.1 for details).

c. <u>For all service connections, after an initial evaluation is completed, conduct reevaluations on a periodic basis, using a schedule acceptable to DOH, and whenever there is a change in the use of the premises.</u>

For existing service connections to individual facilities of the type listed in **Table 4-1**, the CCP Administrator conducts follow-up cross-connection hazard assessments on a periodic basis. These follow-up activities verify that required backflow prevention assemblies are installed and operating properly or that the property continues to pose no hazard.

4.3 ELEMENT 3: ESTABLISH PROCEDURES AND SCHEDULES

Develop and implement procedures and schedules to ensure that:

a. Cross-connections are eliminated if possible

b. Cross-connections that cannot be eliminated are controlled by approved backflow prevention assemblies appropriate to the assessed degrees of hazard

Elimination is the optimum remedy for cross-connections. In cases where elimination is not feasible from a mechanical or economic standpoint, the CCP Administrator uses the criteria and procedures detailed in Element 2 above to determine the appropriate backflow prevention for a given water service connection. For resulting installations, whether they are protecting the water distribution system from customer- or City- owned facilities, the CCP Administrator ensures that the selected type of backflow assembly meets the minimum specifications found in the DOH regulations [Table 8 of WAC 246-290- 490 (4)(a)(ii)].

Any water customer using a privately owned vehicle to obtain water from a City fire hydrant must equip the vehicle with an approved air gap to eliminate the possibility for cross-connection. Further, the vehicle operator must obtain a permit and follow the procedures prescribed by the City's Fire Hydrant Utilization Program as described in **Appendix C**.

For temporary water system connections, the CCP implements cross-connection control as follows:

- ***Commissioning New Water Main Segments*** – Until disinfection, flushing, and satisfactory bacteriological sampling have been completed, new sections of water main must be considered contaminated. Therefore, the City uses an approved RPBA to isolate new sections of water main from the existing system until the new sections are disinfected, inspected, approved, and placed in operation.
- ***Connecting Fixed or Mobile Tanks*** - Chemical or bacteriological contaminants may be present in any fixed or mobile tank. Therefore, the City assesses a high health hazard to tanker trucks that are to be filled via a connection to the public water supply. To ensure backflow protection, each such tanker truck must be equipped with an approved air gap. In addition, an approved RPBA must be located at the point of connection to the City's water supply.
- ***Flushing Sewers*** – City sewers and storm drains are susceptible to chemical and bacteriological contamination. When these facilities are flushed, an approved air gap is maintained to protect the potable water system and an approved RPBA is installed at the point of connection to the City's water supply. If possible, flushing water is provided from tanker trucks.
- ***Connecting Portable Cleaning Units*** - Portable pressure spray or cleaning units may become contaminated. When the City connects any of these units to the potable water supply, they isolate the unit by using an approved air gap or an approved double check valve assembly. If

the unit or the cleaning operation uses chemicals, then an approved reduced pressure backflow assembly must be installed.

c. Approved backflow prevention assemblies are selected and installed in accordance with WAC 246-290-490(6).

The MPWD requires that all backflow prevention assemblies be selected and installed in accordance with the Chapter 2 of the City of Marysville's Water Distribution Design and Construction Standards and Specifications. **Appendix F** provides detailed backflow prevention assembly installation requirements.

4.4 ELEMENT 4: UTILIZE QUALIFIED CROSS-CONNECTION SPECIALISTS

The City must ensure that qualified personnel are available to develop and implement the CCP. The personnel provided must include at least one individual who holds DOH certification as a CCS.

MPWD has encouraged personnel to become certified and to remain active in cross- connection training programs. As of 2016, nine MPWD employees hold state certification as CCS. In addition, six MPWD employees hold state certification as Backflow Assembly Tester (BAT).

MPWD assigns one CCS (i.e., the Water Quality Supervisor) to serve as CCP Administrator. Other MPWD employees holding CCS certification routinely assist the CCP Administrator. In addition, City management assigns other City personnel, as necessary, to assist the CCP Administrator in implementing the program. These other personnel include clerical staff, maintenance and operations personnel, Engineering Department staff, and Parks and Recreation Department staff. DOH renews CCS and BAT certifications on an annual basis based on documented training through attendance at recognized courses and seminars in cross-connection control and backflow prevention.

4.5 ELEMENT 5: ESTABLISH TESTING AND INSPECTION PROCEDURES

Develop and implement procedures to ensure that approved backflow prevention assemblies are inspected and/or tested in accordance with WAC 246-290-490(7).

4.5.1 Testing and Inspection Procedures

MPWD personnel are responsible for installing, testing, and maintaining all City-owned backflow prevention assemblies including assemblies used to isolate the City-owned sewer lift stations and City-owned fire service connections. A City CCS also inspects and maintains air gaps on customer vehicles that have been permitted for withdrawing water from City fire hydrants.

Individual customers are responsible for installing, testing, and maintaining all backflow prevention assemblies required for isolating their premises from the City's water supply system. To guide and assist customers in meeting this responsibility, the CCP Administrator provides customers with pertinent information including:

- Letters explaining the requirements and the prescribed schedules for annual testing and maintenance,
- A list of individuals certified by DOH as qualified to perform assembly testing,
- Blank forms for use in documenting assembly installation, initial inspection, testing, and maintenance,

- Reminder letters and, if necessary, warning notices to customers who fail to return completed Backflow Prevention Assembly Test Reports within the prescribed time schedule.

The customer's responsibility also includes testing assemblies used to isolate fire services located on the customer's property. **Appendix G** includes notes, dimensions, and requirements associated with installing and testing privately owned fire service backflow prevention assemblies. Fire service assembly testing must be in accordance with these **Appendix G** procedures.

4.5.2 Annual Backflow Prevention Assembly Testing Correspondence

DOH regulations require that all backflow prevention assemblies installed for premise isolation be tested after initial installation and annually thereafter. Existing assemblies must also be tested after repair or relocation. The computerized CCP database tracks customers (i.e., properties or facilities) who have installed backflow prevention assemblies. Approximately 30 days before a given assembly is due for annual testing, the database reminds the CCP Administrator to send the customer a letter that identifies the testing requirement and schedule. Annual CCP assembly testing correspondence follows the steps outlined below.

Step 1

The CCP Administrator sends the customer a letter, Annual Backflow Prevention Assembly Testing Requirement, as notification of the upcoming testing requirement and schedule. **Appendix E** includes a sample letter. The letter informs the customer that tests must be completed and satisfactory test results submitted to the City within thirty (30) days from the date of the notice.

If the customer responds to the letter by submitting a Backflow Prevention Assembly Test Report, the CCP Administrator enters the report information into the CCP database. If the test report indicates that a new assembly has been installed or an existing assembly has been replaced, the CCP Administrator verifies that the new or replacement assembly is included in the current list of DOH-approved assemblies. If a replacement unit does not appear on the list, the CCP Administrator issues a letter to notify the customer. The CCP Administrator proceeds with Step 3 below.

If the customer does not respond to the notification letter, the CCP Administrator sends the customer a reminder letter, 2nd NOTICE – Annual Backflow Prevention Assembly Requirement. If the customer does not respond to the 2nd Notice by submitting a Backflow Prevention Assembly Test Report within thirty (30) days from the date of the notice, the CCP Administrator proceeds with Step 2.

Step 2

The CCP Administrator sends the customer a warning letter, *FINAL NOTICE - Annual Backflow Prevention Assembly Testing Requirement*, via Certified Mail, Return Receipt Requested. **Appendix E** includes a sample letter.

If the customer responds to the warning letter by submitting a Backflow Prevention Assembly Test Report, the CCP Administrator enters the report information into the CCP database. The CCP Administrator proceeds with Step 3 below.

If the customer does not respond to the warning letter, the CCP Administrator begins the process of either installing (via City employees or a contractor) an approved backflow prevention assembly at the service connection or disconnecting the customer's service. When a customer's service is to be disconnected, the Director of Public Works authorizes the CCP Administrator to prepare and post a Termination Door Tag at the property. The Door Tag includes wording that:

- Identifies the property and the owner/customer of record,
- States the basis for noncompliance of the property with the City's CCP backflow prevention requirements,
- Warns the customer that service is to be disconnected five days after the Door Tag posting date,
- Advises the customer that disconnection can be prevented if the customer provides proof of compliance with the CCP requirements within the five- day period,
- Advises the customer that, after disconnection, service will not be restored until the customer provides proof of compliance with the CCP requirements.

In accordance with WAC 246-290-490, the Director of Public Works notifies the LAA before disconnecting a customer's water service.

Step 3

The CCP Administrator sends the customer a letter, *Participation in Annual Backflow Prevention Assembly Testing*, to express the City's appreciation for the customer's cooperation. **Appendix E** includes a sample letter.

4.6 ELEMENT 6: ESTABLISH A QUALITY ASSURANCE PROGRAM FOR TESTING

Develop and implement a quality assurance program for testing backflow prevention assemblies. The program must include documentation of tester certification and test kit calibration, test report content, and schedules for submitting test reports.

The CCP uses WAC 246-290-490(7) as a basis for ensuring performance of all backflow prevention assembly testing.

The CCP Administrator conducts an annual survey of backflow assembly testers (BATs) to assess their interest in being included in the Marysville area list. Interested BATs are required to provide copies of their current certification cards before they are included. The CCP Administrator maintains a list of individuals who do business in the Marysville area and who are currently certified as Backflow Assembly Testers (BATs) by DOH to test backflow prevention assemblies. This list is stored in the Tokay database and updated annually. **Appendix H** contains the July 2002 version of the City's list. If a customer submits a test report performed by a BAT who is not on the City's list, the CCP Administrator consults the current DOH list to verify the tester's certification. **Appendix E** includes a sample of the letter and form the City sends to prospective testers to obtain information for updating the List. As a courtesy, the City provides a copy of this BAT list to affected customers to assist them in locating qualified personnel to perform initial or annual inspections and testing.

The CCS ensures that all Backflow Prevention Assembly Test Reports are filled out accurately, completely, legibly and meet the test report requirements specified in WAC 246-292-036.

Certified backflow assembly testers are also required to submit annual, written verification of calibration accuracy for any test equipment they utilize. Calibration standards and procedures must comply with those specified by WAC 246-292-034(5-7).

4.7 ELEMENT 7: ESTABLISH INCIDENT RESPONSE PROCEDURES

Develop and be prepared to implement procedures for responding to backflow incidents.

MPWD personnel are trained to respond to any actual or suspected backflow incident. In summary, detection or suspicion of a backflow incident initiates the following procedures:

- The CCS will recruit any necessary support personnel and contact the customer to arrange an immediate, on-site assessment. Initially, the assessment will focus on determining the nature, severity, and extent of contamination. Operations personnel may suspend water service to the customer and/or to adjoining segments of the distribution system while this determination is proceeding.
- After a preliminary assessment, the CCS will recruit assistants, as required, to further diagnose the problem, to make repairs, and/or to restore water quality. Generally, these assistants will be MPWD operating and maintenance personnel. If the incident involves an industrial facility, the CCS may enlist the assistance of the customer's operating and/or maintenance personnel.
- If it appears that public notification may be required, the CCS will inform the Director of Public Works.
- The CCS will notify the Snohomish Health District and DOH of the problem as soon as the assessment is complete.
- If water service has been suspended, the City will restore service only after the cross-connection has been eliminated and any residual contamination has been removed.

These procedures were developed based on guidance provided in:

- *Cross Connection Control Program Administration*, First Edition, January 1998, published by the Cross-Connection Control Committee of the Pacific Northwest Section of the American Water Works Association (PNWS-AWWA).
- *Backflow Incident Investigation Procedures*, First Edition, December 1996, published by the Cross-Connection Control Committee of the Pacific Northwest Section of the American Water Works Association (PNWS-AWWA).

Appendix I describes the City's backflow incident response procedures in detail.

4.8 ELEMENT 8: IMPLEMENT CONSUMER EDUCATION

Incorporate information on cross-connection control into the City's existing consumer education program.

The City recognizes that consumer education is perhaps the most important element of an effective Cross-Connection Control Program. Consumer education leverages limited City resources and personnel by involving customers in the effort to identify potential cross-connection hazards in homes and by describing backflow prevention assemblies that are recommended and approved for installation by the customer to eliminate or reduce these hazards. The City's consumer education program focuses on explaining the necessity of the CCP in protecting the health of water system customers and on the customer's obligation to comply with the underlying regulations and associated requirements.

4.8.1 Public Involvement Programs

The City is considering developing, advertising, and conducting a series of public forums where MPWD personnel would meet with area organizations and/or groups of individual citizens to explain the basics of cross-connection control and, thus, promote understanding and compliance with the program's objectives. Other potential education opportunities being considered include adding cross-connection control facts and examples to customer newsletters, brochures, consumer confidence reports, displays at public gatherings, and training sessions for City employees and interested customers. These efforts would present the issue in understandable terms and stress the importance of compliance as a means of maintaining public health.

4.9 ELEMENT 9: MAINTAIN PROGRAM RECORDS

Develop and maintain cross-connection control program records including:

a. A master list of service connections and/or premises where backflow prevention assemblies are installed, the assessed hazard level for each location, and the type of assembly required and/or installed at each location.

The MPWD recognizes that an up-to-date record system is essential to operation of a successful CCP. Accurate records enhance the City's ability to discover potential cross-connections and eliminate or control them in a timely manner. Detailed records also constitute a basis for any enforcement action or legal defense by the City.

The CCP Administrator uses Tokay, a proprietary software application, for storing, organizing, and tracking CCP records. Tokay includes a menu of services that allow the CCP Administrator to identify and locate the premises where backflow prevention assemblies are installed (or need to be installed) so that appropriate information, instructions, and notifications can be sent to the customer in a timely manner. The CCP Administrator stores blank copies of CCP Backflow Prevention Assembly Test Report Forms and associated customer notification form letters in Microsoft WORD format. See **Appendix E** for sample program forms and letters, as well as an example assembly inventory list.

The CCP Administrator collects new backflow prevention assembly data, health hazard evaluation data, and Backflow Prevention Assembly Test Reports and adds the information to the Tokay database at regular intervals. Paper copies are maintained within the CCP files after the information is entered into the Tokay database.

b. Inventory information on:

- Approved air gaps installed in lieu of approved assemblies, including exact location, assessed degree of hazard, history of health hazard evaluations, installation date, and inspection history (identify dates, results, and inspectors),
- Approved backflow prevention assemblies including exact location, description (type, manufacturer, model, size, and serial number), assessed degree of hazard, history of health hazard evaluations, installation date, and inspection history (identify dates, tests performed, test results, assembly repairs, and inspectors),
- All facilities classified as a high hazard type facility per Table 9 of WAC 246-290-490(8) which have been issued a waiver by the City for mandatory premises isolation.

The CCP Administrator maintains a list of service connections where approved backflow prevention assemblies are installed to protect the water system from contamination. This list includes the assessed hazard for each connection. The database includes information from all Backflow Prevention Assembly Test Reports and copies of the underlying Health Hazard Evaluation Reports, along with any supporting documents and drawings. The database includes copies of all CCP-related correspondence with individual customers. These records are kept for each property for as long as that property poses a cross-connection hazard to the City's distribution system. For any facility that poses a high health risk of the type mentioned in Table 9 of WAC 246-290-490(4)(b) but that has no cross-connections at present, the CCP files document why backflow prevention is waived.

c. CCP summary reports and backflow incident reports required by WAC 246-290- 490(8).

The CCP Administrator prepares an Annual Cross-Connection Control Summary Report as required by WAC 246-290-490(8) to document the program status and significant activities that occurred during the previous year. The CCP Administrator submits a copy of this report to DOH. The CCP Administrator also distributes copies of this report to the cross-connection program file, to the Director of Public Works, and to appropriate Public Works Department operations and maintenance personnel. **Appendix E** includes a sample annual report form.

For any backflow incident that occurs, the CCP Administrator prepares a Backflow Incident Report to document all facets of the incident and the associated response. **Appendix I** includes a sample Backflow Incident Report Form. The CCP Administrator places the original incident report into the cross- connection program file and directs copies to DOH and the Director of Public Works. The CCP Administrator also directs copies to appropriate City operations and maintenance personnel. In addition, record copies of backflow incident reports are attached to the City's next Annual Cross- Connection Control Summary Report for submittal to DOH. Per WAC requirements, these Annual Reports are kept on file for at least five years.

In addition to the reports mentioned above, the CCP Administrator prepares a monthly Cross-Connection Program Report to summarize the program status and to document recent program activities. The CCP Administrator distributes copies of this report to the CCP file and to the Director of Public Works for distribution to appropriate Public Works Department operations and maintenance personnel. **Appendix E** includes a sample monthly report form.

4.10 ELEMENT 10: SATISFY RECLAIMED WATER REQUIREMENTS

Purveyors who distribute and/or have facilities that receive reclaimed water within their service area shall meet any additional cross-connection control requirements imposed by the DOH by obtaining a permit issued in accordance with Chapter 90.46 of the Revised Code of Washington (RCW).

Currently, MPWD does not receive or distribute any reclaimed water. Thus, there is no current requirement for meeting RCW 90.46.

DOH requires that any facility that uses reclaimed water and that also uses the City's water supply must install an air gap or reduced pressure backflow assembly to protect the City's water distribution system. Currently, there are no facilities in the City known to be using reclaimed water.

5. REFERENCES

Backflow Incident Investigation Procedures, First Edition, December 1996, published by the Cross Connection Control Committee of the Pacific Northwest Section of the American Water Works Association (PNWS-AWWA).

City of Marysville Design and Construction Standards and Specifications for Development.

Cross-Connection Control Manual, Accepted Procedure and Practice, current edition, published by the Cross-Connection Control Committee of the Pacific Northwest Section of the American Water Works Association (PNWS-AWWA).

Manual of Cross-Connection Control, published by the Foundation for Cross- Connection Control and Hydraulic Research, University of Southern California.

Marysville Municipal Code, Title 14, Chapter 14.10 Water Supply Cross-Connections.

1997 Uniform Plumbing Code (including City of Marysville Amendments).

WAC 246-290-490, Cross-Connection Control.

Appendices

Appendix A
City of Marysville
Cross-Connection Control Ordinance

Appendix A

City of Marysville Cross-Connection Control Ordinance

Chapter 14.10 Water Supply Cross-Connections

DRAFT FINAL

Sections:

14.10.010 Adoption of state regulations
14.10.020 Definitions
14.10.030 Compliance required
14.10.040 Cross-connection prohibited
14.10.050 Use of backflow prevention devices
14.10.060 Backflow prevention device installation
14.10.070 Backflow prevention device inspection and testing
14.10.080 Fire hydrant utilization
14.10.090 Enforcement of cross-connection control regulations

14.10.010 Adoption of state regulations.
The Washington State Department of Health regulations concerning cross-connection control (i.e., Washington Administrative Code 246-290-490) are incorporated herein by reference as though fully set forth.
(Amended, 2002)

14.10.020 Definitions.
As used in this chapter, unless the context states otherwise, the following definitions shall apply:
(1) "Air gap separation" means the unobstructed vertical distance through the free atmosphere between the lowest opening from any pipe or faucet supplying water to a tank, plumbing fixture, or other device and the flood level rim of the receptacle, and is at least double the diameter of the supply pipe measured vertically above the flood level rim of the vessel. In no case shall the gap be less than one inch;
(2) "Auxiliary supply" means any water source or system, other than the public water supply, that may be available in the building or premises;
(3)) "Backflow" means the flow other, than the intended direction of flow, of any foreign liquids, gases or substances into the distribution system of a public water supply:
(a) "Back pressure" means backflow caused by a pump, elevated tank, boiler or other means that could create pressure within the system greater than the supply pressure,
(b)) "Back siphonage" means a form of backflow due to a negative or subatmospheric pressure within a water system;
(4) "Backflow prevention device" means a device to counteract back pressures or prevent back siphonage;
(5) "Cross-connection" means any physical arrangement whereby a public water supply is connected, directly or indirectly, with any other water supply system, sewer, drain, conduit, pool, storage reservoir, plumbing fixture or other device which contains, or may contain, contaminated water, sewage or other waste or liquid of unknown or unsafe quality which may be capable of imparting contamination to the public water supply as a result of backflow, bypass arrangements, jumper connections, removable sections, swivel or change-over devices, and other temporary or permanent devices through which, or because of which, backflow could occur are considered to be cross-connections;
(6) “Customer” means any person, family, business, corporation, partnership or firm connected to the City of Marysville water supply;
(7) “Customer’s water system” includes point-of-use facilities located downstream of the City's individual service connections and/or meters;

(8) "Double check valve assembly" means an assembly composed of two single, independently acting check valves, including tightly closing shutoff valves located at each end of the assembly and suitable connections for testing the watertightness of each check valve;
(9) "Local Administrative Authority" means the entity responsible for enforcing the Uniform Plumbing Code;
(10) "Public water system" consists of all water treatment, storage, and distribution facilities under the City's complete control and upstream of the City's individual service connections and/or meters;
(11) "Purveyor" means the entity that owns the public water system and is responsible for cross-connection control and prevention related to the public water system;
(12) "Reduced pressure principle backflow prevention device" means a device incorporating two or more check valves and an automatically operating differential relief valve located between the two checks, two shutoff valves and equipped with necessary appurtenances for testing. The device shall operate to maintain the pressure in the zone between the two check valves, less than the pressure on the public water supply side of the device. At cessation of normal flow, the pressure between the check valves shall be less than the supply pressure. In case of leakage of either check valve the differential relief valve shall operate to maintain this reduced pressure by discharging to the atmosphere. When the inlet pressure is two pounds per square inch or less the relief valve shall open to the atmosphere thereby providing an air gap in the device.
(Amended 2002, Prior code 14.10.050)

14.10.030 Compliance required.
Any customer who is now receiving water from the Marysville public water system or who will in the future receive water from the City of Marysville, regardless whether residing within or without the city limits of the City of Marysville, and including any other water district, municipal organization, or other organization connected to the City of Marysville public water system, shall comply with the rules and regulations contained in this chapter.
(Amended 2002, Prior code 14.10.010 and 14.10.030)

14.10.040 Cross-connection prohibited.
(1) Except as provided in MMC 14.10.050, all cross-connections, as defined in MMC 14.10.020, which may pose a water quality contamination threat to the public water supply, whether or not such cross-connections are controlled by automatic devices such as check valves or by hand-operated mechanisms such as a gate valve or stop cocks, are prohibited.
(2) Cross-connections that pose a water quality contamination threat solely to the customer's water system must be removed or controlled, as set forth by the Uniform Plumbing Code, which is incorporated by reference into MMC 16.08.010.
(3) Failure on the part of persons, firms or corporations to discontinue the use of any and all cross-connections and to physically separate such cross-connections will be sufficient cause for the discontinuance of the public water service to the premises on which the cross-connection exists.
(4) The purveyor shall, in cooperation with the local administrative authority, make periodic evaluations of premises served by the public water supply to check for the presence of cross-connections. Any cross-connections found in such evaluation shall be ordered removed by the responsible agency. If an immediate hazard to health is caused by the cross-connection, water service to the premises may be discontinued until it is verified that the cross-connection has been removed.
(Amended 2002, Prior code 14.10.060)

14.10.050 Use of backflow prevention assemblies.
Backflow prevention assemblies shall be installed at the service connection or within any premises where, in the judgment of the purveyor or the local administrative authority, the nature and extent of activities on the premises, or the materials used in connection with the activities, or materials stored on the premises would present an immediate and dangerous hazard to health should a cross-connection occur, even though such cross-connection does not exist at the time the backflow prevention assembly is required to be installed. The type of protective assembly required herein shall depend on the presumed degree of health hazard which exists, as follows:
(1) An air gap separation or a reduced pressure principle backflow prevention assembly shall be installed where the water supply may be contaminated with sewage, industrial waste of a toxic nature or other contaminant which would cause a high health or system hazard;
(2) In the case of a low health hazard (i.e., a substance which may be objectionable but not hazardous to health), a double check valve assembly, air gap separation, or a reduced pressure principle backflow prevention assembly shall be installed.

Situations requiring the use of a backflow prevention assembly include, but are not limited to, the following:

Table 14.10.050-1

Required Backflow Prevention Assemblies for Premises, Facilities, and Processes Requiring Mandatory Service Protection

Premises Category or Activity	Presumed Health Hazard	Minimum Required Protection
Car washes	High	RPBA
Chemical plants (including ice manufacturing plants and battery manufacturing or repair facilities)	High	RPBA
Food processing plants (e.g., canneries, packing houses, slaughter houses, cold storage plants)	High	RPBA
Beverage bottling plants	High	RPBA
Film processing facilities	High	RPBA
Hospitals, medical centers, medical/dental clinics, veterinary clinics, nursing homes, blood plasma centers	High	RPBA
Laboratories	High	RPBA
Metal plating industries	High	RPBA
Mortuaries	High	RPBA
Premises with irrigation systems that use City water in combination with chemical addition (e.g., parks, playgrounds, mobile home/RV parks, golf courses, cemeteries, and estates)	High	RPBA
Petroleum processing or storage plants	High	RPBA
Piers and docks (e.g., graving docks, boat marinas, dry docks)	High	RPBA
Commercial laundries and dry cleaners	High	RPBA
Properties where hazard survey access is restricted or denied	High	RPBA
Premises with unapproved auxiliary water supply interconnected with the potable water supply	High	RPBA
Radioactive material processing plants or nuclear reactors	High	AG Note 1
Wastewater and/or sewage treatment plants	High	AG Note 1
Wastewater lift stations and pumping stations	High	RPBA
Agricultural facilities (e.g., farms, dairies)	High	RPBA
Premises where both reclaimed water and potable water are provided	High	RPBA
All properties classified as Commercial (including shopping centers)	High	RPBA
Premises having boilers, heat exchangers, solar water heaters, swimming pools, spas, ponds, irrigation systems (with no chemical addition), etc.	High	RPBA
Premises having an auxiliary water supply and having internal cross-connections that are not correctable	High	RPBA
Premises that handle any substance that is objectionable (not a health hazard) in a manner that poses a potential cross-connection	Low	DCVA
Premises having low health cross-connection hazards that are unavoidable or not correctable (e.g., buildings over 30 feet tall)	Low	DCVA
Premises having a repeated history of cross-connections being established or re-established	High	RPBA
Premises with activities that involve toxic substances and/or materials dangerous to health	High	RPBA
Premises with approved auxiliary water supplies	Low	DCVA

Residential flow-through or combination fire protection systems constructed of potable water piping and materials	Low	Not Required
Privately owned fire hydrants and/or service connections with fire protection systems other than flow-through or combination systems that	Low	On-site DCVA
Premises with fire sprinkler systems that utilize anti-freeze, chemical additives, or auxiliary water supplies	High	RPBA (or RPDA)
Premises that practice graywater use and/or stormwater reuse	High	RPBA
Premises with irrigation systems that use City water only, with no chemical addition	Low	DCVA
Recreational Vehicle Parks	High	RPBA
New Water Main Construction	High	RPBA
Premises having complex plumbing arrangements and/or plumbing potentially subject to frequent changes that make it impracticable to assess whether cross-connection hazards exist or may exist in the future	High	RPBA

Notes:
1. Or an RPBA plus an in-plant AG
2. Or a DCDA

Definitions

AG	approved air gap
DCDA	double check detector assembly
DCVA	double check valve assembly
RPBA	reduced pressure backflow assembly
RPDA	reduced pressure detector assembly

Any backflow prevention assembly required, as described above, shall be a model approved by the Washington State Department of Health (DOH). A double check valve assembly or a reduced pressure principle backflow prevention assembly will be approved if it has successfully passed performance tests of the University of Southern California Engineering Center or other testing laboratories satisfactory to DOH.
(Amended 2002, Prior code 14.10.070, 14.10.080, and 14.10.110)

14.10.060 Backflow prevention assembly installation.
Backflow prevention assemblies required in MMC 14.10.050 shall be installed at the meter, at the property line of the premises when meters are not used, or at a location designated by the purveyor or local administrative authority. The assembly shall be located so as to be readily accessible for maintenance and testing, and where no part of the assembly will be submerged. Backflow prevention assemblies required in MMC 14.10.050 shall be installed under the supervision of, and with the approval of, the purveyor.
(Amended 2002, Prior code 14.10.090 and 14.10.100)

14.10.070 Backflow prevention assembly inspection and testing.
Backflow prevention assembly installed under MMC 14.10.050 shall be inspected and tested upon installation and annually thereafter, or more often where successive inspections indicate repeated failure. Testing shall be done by a certified backflow assembly tester (BAT), whose name is present on the City's list of certified BATs. The assemblies shall be repaired, overhauled, or replaced whenever they are found to be defective. Inspections, tests, repairs, and records thereof shall be at the expense of the owner of the assembly and shall be done under the City's supervision.
(Amended 2002, Prior code 14.10.120)

14.10.080 Fire hydrant utilization.
Temporary utilization of City fire hydrants by construction contractors or other City water customers is allowable only if users apply for and are granted a valid Vehicle or Site Fire Hydrant Utilization Permit.
(Amended 2002)

14.10.90 Enforcement of cross-connection control regulations.
To enforce compliance with the requirements of MMC 14.10.010 through 14.10.080, the City reserves the right to correct an actual or potential cross-connection health hazard by installation of a backflow prevention assembly, or by immediately disconnecting a customer's water service if immediate remediation is not possible. Failure of any customer or any district organization to cooperate in the removal of a cross-connection, or the installation,

maintenance, testing, or backflow prevention assembly or the requirements of an air gap separation shall be grounds for the termination of the water services at a point where such flow, which is to be terminated by the City of Marysville, would best prevent possible contamination of the public water supply.
(Amended 2002, Prior code 14.10.130)

Appendix B
WAC Chapter 246-290-490
Cross-Connection Control

WAC 246-290-490

Cross-connection control.

(1) Applicability, purpose, and responsibility.

(a) All community water systems shall comply with the cross-connection control requirements specified in this section.

(b) All noncommunity water systems shall apply the principles and provisions of this section, including subsection (4)(b) of this section, as applicable to protect the public water system from contamination via cross-connections. Noncommunity systems that comply with subsection (4)(b) of this section and the provisions of WAC **51-56-0600** of the UPC (which addresses the installation of backflow preventers at points of water use within the potable water system) shall be considered in compliance with the requirements of this section.

(c) The purpose of the purveyor's cross-connection control program shall be to protect the public water system, as defined in WAC **246-290-010**, from contamination via cross-connections.

(d) The purveyor's responsibility for cross-connection control shall begin at the water supply source, include all the public water treatment, storage, and distribution facilities, and end at the point of delivery to the consumer's water system, which begins at the downstream end of the service connection or water meter located on the public right of way or utility-held easement.

(e) Under this section, purveyors are not responsible for eliminating or controlling cross-connections within the consumer's water system. Under chapter **19.27** RCW, the responsibility for cross-connection control within the consumer's water system, i.e., within the property lines of the consumer's premises, lies with the authority having jurisdiction.

(2) General program requirements.

(a) The purveyor shall develop and implement a cross-connection control program that meets the requirements of this section, but may establish a more stringent program through local ordinances, resolutions, codes, bylaws, or operating rules.

(b) Purveyors shall ensure that good engineering and public health protection practices are used in the development and implementation of cross-connection control programs. Department publications and the most recently published editions of references, such as, but not limited to, those listed below, may be used as guidance for cross-connection program development and implementation:

(i) *Manual of Cross-Connection Control* published by the Foundation for Cross-Connection Control and Hydraulic Research, University of Southern California (USC Manual);

(ii) *Cross-Connection Control Manual, Accepted Procedure and Practice* published by the Pacific Northwest Section of the American Water Works Association (PNWS-AWWA Manual); or

(iii) Guidance document: *Cross-Connection Control for Small Water Systems* published by the department.

(c) The purveyor may implement the cross-connection control program, or any portion thereof, directly or by means of a contract with another agency or party acceptable to the department.

(d) The purveyor shall coordinate with the authority having jurisdiction in all matters concerning cross-connection control. The purveyor shall document and describe the

coordination, including delineation of responsibilities, in the written cross-connection control program required in (e) of this subsection.

(e) The purveyor shall include a written description of the cross-connection control program in the water system plan required under WAC **246-290-100** or the small water system management program required under WAC **246-290-105**. The cross-connection control program shall include the minimum program elements described in subsection (3) of this section.

(f) The purveyor shall ensure that cross-connections between the distribution system and a consumer's water system are eliminated or controlled by the installation of an approved backflow preventer commensurate with the degree of hazard. This can be accomplished by implementation of a cross-connection program that relies on:

(i) Premises isolation as defined in WAC **246-290-010**; or

(ii) Premises isolation and in-premises protection as defined in WAC **246-290-010**.

(g) Purveyors with cross-connection control programs that rely both on premises isolation and in-premises protection:

(i) Shall comply with the premises isolation requirements specified in subsection (4)(b) of this section; and

(ii) May reduce premises isolation requirements and rely on in-premises protection for premises other than the type addressed in subsection (4)(b) of this section, only if the following conditions are met:

(A) The in-premises backflow preventers provide a level of protection commensurate with the purveyor's assessed degree of hazard;

(B) Backflow preventers which provide the in-premises backflow protection meet the definition of approved backflow preventers as described in WAC **246-290-010**;

(C) The approved backflow preventers are installed, inspected, tested (if applicable), maintained, and repaired in accordance with subsections (6) and (7) of this section;

(D) Records of the backflow preventers are maintained in accordance with subsections (3)(j) and (8) of this section; and

(E) The purveyor has reasonable access to the consumer's premises to conduct an initial hazard evaluation and periodic reevaluations to determine whether the in-premises protection is adequate to protect the purveyor's distribution system.

(h) The purveyor shall take appropriate corrective action as authorized by the legal instrument required by subsection (3)(b) of this section, when:

(i) A cross-connection exists that is not controlled commensurate to the degree of hazard assessed by the purveyor; or

(ii) A consumer fails to comply with the purveyor's requirements regarding the installation, inspection, testing, maintenance or repair of approved backflow preventers required by this chapter.

(i) The purveyor's corrective action may include, but is not limited to:

(i) Denying or discontinuing water service to a consumer's premises until the cross-connection hazard is eliminated or controlled to the satisfaction of the purveyor;

(ii) Requiring the consumer to install an approved backflow preventer for premises isolation commensurate with the degree of hazard; or

(iii) The purveyor installing an approved backflow preventer for premises isolation commensurate with the degree of hazard.

(j) Except in the event of an emergency, purveyors shall notify the authority having jurisdiction prior to denying or discontinuing water service to a consumer's premises for one or more of the reasons listed in (h) of this subsection.

(k) The purveyor shall prohibit the intentional return of used water to the purveyor's distribution system. Used water includes, but is not limited to, water used for heating, cooling, or other purposes within the consumer's water system.

(3) Minimum elements of a cross-connection control program.

(a) To be acceptable to the department, the purveyor's cross-connection control program shall include the minimum elements identified in this subsection.

(b) Element 1: The purveyor shall adopt a local ordinance, resolution, code, bylaw, or other written legal instrument that:

(i) Establishes the purveyor's legal authority to implement a cross-connection control program;

(ii) Describes the operating policies and technical provisions of the purveyor's cross-connection control program; and

(iii) Describes the corrective actions used to ensure that consumers comply with the purveyor's cross-connection control requirements.

(c) Element 2: The purveyor shall develop and implement procedures and schedules for evaluating new and existing service connections to assess the degree of hazard posed by the consumer's premises to the purveyor's distribution system and notifying the consumer within a reasonable time frame of the hazard evaluation results. At a minimum, the program shall meet the following:

(i) For connections made on or after April 9, 1999, procedures shall ensure that an initial evaluation is conducted before water service is provided;

(ii) For all other connections, procedures shall ensure that an initial evaluation is conducted in accordance with a schedule acceptable to the department; and

(iii) For all service connections, once an initial evaluation has been conducted, procedures shall ensure that periodic reevaluations are conducted in accordance with a schedule acceptable to the department and whenever there is a change in the use of the premises.

(d) Element 3: The purveyor shall develop and implement procedures and schedules for ensuring that:

(i) Cross-connections are eliminated whenever possible;

(ii) When cross-connections cannot be eliminated, they are controlled by installation of approved backflow preventers commensurate with the degree of hazard; and

(iii) Approved backflow preventers are installed in accordance with the requirements of subsection (6) of this section.

(e) Element 4: The purveyor shall ensure that personnel, including at least one person certified as a CCS, are provided to develop and implement the cross-connection control program.

(f) Element 5: The purveyor shall develop and implement procedures to ensure that approved backflow preventers relied upon to protect the public water system are inspected and/or tested (as applicable) under subsection (7) of this section.

(g) Element 6: The purveyor shall develop and implement a backflow prevention assembly testing quality control assurance program, including, but not limited to, documentation of BAT certification and test kit calibration, test report contents, and time frames for submitting completed test reports.

(h) Element 7: The purveyor shall develop and implement (when appropriate) procedures for responding to backflow incidents.

(i) Element 8: The purveyor shall include information on cross-connection control in the purveyor's existing program for educating consumers about water system operation. The public education program may include periodic bill inserts, public service announcements, pamphlet distribution, notification of new consumers and consumer confidence reports.

(j) Element 9: The purveyor shall develop and maintain cross-connection control records including, but not limited to, the following:

(i) A master list of service connections and/or consumer's premises where the purveyor relies upon approved backflow preventers to protect the public water system from contamination, the assessed hazard level of each, and the required backflow preventer(s);

(ii) Inventory information on backflow preventers that protect the public water system including:

(A) Approved air gaps installed in lieu of approved assemblies including exact air gap location, assessed degree of hazard, installation date, history of inspections, inspection results, and person conducting inspections;

(B) Approved backflow assemblies including exact assembly location, assembly description (type, manufacturer, model, size, and serial number), assessed degree of hazard, installation date, history of inspections, tests and repairs, test results, and person performing tests; and

(C) Approved AVBs used for irrigation system applications including location, description (manufacturer, model, and size), installation date, history of inspection(s), and person performing inspection(s).

(iii) Cross-connection program summary reports and backflow incident reports required under subsection (8) of this section.

(k) Element 10: Purveyors who distribute and/or have facilities that receive reclaimed water within their water service area shall meet any additional cross-connection control requirements imposed by the department in a permit issued under chapter **90.46** RCW.

(4) Approved backflow preventer selection.

(a) The purveyor shall ensure that a CCS:

(i) Assesses the degree of hazard posed by the consumer's water system upon the purveyor's distribution system; and

(ii) Determines the appropriate method of backflow protection for premises isolation as described in Table 8.

TABLE 8
APPROPRIATE METHODS OF BACKFLOW PROTECTION FOR PREMISES ISOLATION

Degree of Hazard	Application Condition	Appropriate Approved Backflow Preventer
High health cross-connection hazard	Backsiphonage or backpressure backflow	AG, RPBA, or RPDA
	Backsiphonage or	AG, RPBA, RPDA,

Degree of Hazard	Application Condition	Appropriate Approved Backflow Preventer
Low cross-connection hazard	backpressure backflow	DCVA, or DCDA

(b) Premises isolation requirements.

(i) The purveyor shall ensure that an approved air gap, RPBA, or RPDA is installed for premises isolation for service connections to premises posing a high health cross-connection hazard including, but not limited to, those premises listed in Table 9, except those premises identified as severe in (b)(ii) of this subsection.

(ii) For service connections to premises posing a severe health cross-connection hazard including wastewater treatment plants, radioactive material processing plants, and nuclear reactors, the purveyor shall ensure that either an:

(A) Approved air gap is installed for premises isolation; or

(B) Approved RPBA or RPDA is installed for premises isolation in combination with an in-plant approved air gap.

(iii) If the purveyor's CCS determines that no hazard exists for a connection serving premises of the type listed in Table 9, the purveyor may grant an exception to the premises isolation requirements of (b)(i) of this subsection.

(iv) The purveyor shall document, on a case-by-case basis, the reasons for granting an exception under (b)(i) of this subsection and include the documentation in the cross-connection control program annual summary report required in subsection (8) of this section.

TABLE 9
SEVERE* AND HIGH HEALTH CROSS-CONNECTION HAZARD PREMISES REQUIRING PREMISES ISOLATION BY AG OR RPBA

Agricultural (farms and dairies)

Beverage bottling plants

Car washes

Chemical plants

Commercial laundries and dry cleaners

Premises where both reclaimed water and potable water are provided

Film processing facilities

Food processing plants

Hospitals, medical centers, nursing homes, veterinary, medical and dental clinics, and blood plasma centers

Premises with separate irrigation systems using the purveyor's water supply and with chemical addition+

Laboratories

Metal plating industries

Mortuaries

Petroleum processing or storage plants

Piers and docks

Radioactive material processing plants or nuclear reactors*

Survey access denied or restricted

Wastewater lift stations and pumping stations

Wastewater treatment plants*

Premises with an unapproved auxiliary water supply interconnected with the potable water supply

+ For example, parks, playgrounds, golf courses, cemeteries, estates, etc.

* RPBAs for connections serving these premises are acceptable only when used in combination with an in-plant approved air gap; otherwise, the purveyor shall require an approved air gap at the service connection.

(c) Backflow protection for single-family residences.

(i) For single-family residential service connections, the purveyor shall comply with the premises isolation requirements of (b) of this subsection when applicable.

(ii) If the requirements of (b) of this subsection do not apply and the requirements specified in subsection (2)(g)(ii) of this section are met, the purveyor may rely on backflow protection provided at the point of hazard in accordance with WAC **51-56-0600** of the UPC for hazards such as, but not limited to:

(A) Irrigation systems;

(B) Swimming pools or spas;

(C) Ponds; and

(D) Boilers.

For example, the purveyor may accept an approved AVB on a residential irrigation system, if the AVB is properly installed under the UPC.

(d) Backflow protection for fire protection systems.

(i) Backflow protection is not required for residential flow-through or combination fire protection systems constructed of potable water piping and materials.

(ii) For service connections with fire protection systems other than flow-through or combination systems, the purveyor shall ensure that backflow protection consistent with WAC **51-56-0600** of the UPC is installed. The UPC requires minimum protection as follows:

(A) An RPBA or RPDA for fire protection systems with chemical addition or using unapproved auxiliary water supply; and

(B) A DCVA or DCDA for all other fire protection systems.

(iii) For connections made on or after April 9, 1999, the purveyor shall ensure that backflow protection is installed before water service is provided.

(iv) For existing fire protection systems:

(A) With chemical addition or using unapproved auxiliary supplies, the purveyor shall ensure that backflow protection is installed within ninety days of the purveyor notifying the consumer of the high health cross-connection hazard or in accordance with an alternate schedule acceptable to the purveyor.

(B) Without chemical addition, without on-site storage, and using only the purveyor's water (i.e., no unapproved auxiliary supplies on or available to the premises), the purveyor shall ensure that backflow protection is installed in accordance with a schedule acceptable to the purveyor or at an earlier date if required by the code official administering the State Building Code as defined in chapter **51-04** WAC.

(C) When establishing backflow protection retrofitting schedules for fire protection systems that have the characteristics listed in (d)(iv)(B) of this subsection, the purveyor may consider factors such as, but not limited to, impacts of assembly installation on sprinkler performance, costs of retrofitting, and difficulty of assembly installation.

(e) Purveyors may require approved backflow preventers commensurate with the degree of hazard as determined by the purveyor to be installed for premises isolation for connections serving premises that have characteristics such as, but not limited to, the following:

(i) Complex plumbing arrangements or plumbing potentially subject to frequent changes that make it impracticable to assess whether cross-connection hazards exist;

(ii) A repeated history of cross-connections being established or reestablished; or

(iii) Cross-connection hazards are unavoidable or not correctable, such as, but not limited to, tall buildings.

(5) Approved backflow preventers.

(a) The purveyor shall ensure that all backflow prevention assemblies relied upon by the purveyor are models included on the current list of backflow prevention assemblies approved for use in Washington state. The current approved assemblies list is available from the department upon request.

(b) The purveyor may rely on testable backflow prevention assemblies that are not currently approved by the department, if the assemblies:

(i) Were included on the department and/or USC list of approved backflow prevention assemblies at the time of installation;

(ii) Have been properly maintained;

(iii) Are commensurate with the purveyor's assessed degree of hazard; and

(iv) Have been inspected and tested at least annually and have successfully passed the annual tests.

(c) The purveyor shall ensure that an unlisted backflow prevention assembly is replaced by an approved assembly commensurate with the degree of hazard, when the unlisted assembly:

(i) Does not meet the conditions specified in (b)(i) through (iv) of this subsection;

(ii) Is moved; or

(iii) Cannot be repaired using spare parts from the original manufacturer.

(d) The purveyor shall ensure that AVBs meet the definition of approved atmospheric vacuum breakers as described in WAC **246-290-010**.

(6) Approved backflow preventer installation.

(a) The purveyor shall ensure that approved backflow preventers are installed in the orientation for which they are approved (if applicable).

(b) The purveyor shall ensure that approved backflow preventers are installed in a manner that:

(i) Facilitates their proper operation, maintenance, inspection, in-line testing (as applicable), and repair using standard installation procedures acceptable to the department such as those in the USC Manual or PNWS-AWWA Manual;

(ii) Ensures that the assembly will not become submerged due to weather-related conditions such as flooding; and

(iii) Ensures compliance with all applicable safety regulations.

(c) The purveyor shall ensure that approved backflow assemblies for premises isolation are installed at a location adjacent to the meter or property line or an alternate location acceptable to the purveyor.

(d) When premises isolation assemblies are installed at an alternate location acceptable to the purveyor, the purveyor shall ensure that there are no connections between the point of delivery from the public water system and the approved backflow assembly, unless the installation of the connection meets the purveyor's cross-connection control requirements and is specifically approved by the purveyor.

(e) The purveyor shall ensure that approved backflow preventers are installed in accordance with the following time frames:

(i) For connections made on or after April 9, 1999, the following conditions shall be met before service is provided:

(A) The provisions of subsection (3)(d)(ii) of this section; and

(B) Satisfactory completion of the requirements of subsection (7) of this section.

(ii) For existing connections where the purveyor identifies a high health cross-connection hazard, the provisions of (3)(d)(ii) of this section shall be met:

(A) Within ninety days of the purveyor notifying the consumer of the high health cross-connection hazard; or

(B) In accordance with an alternate schedule acceptable to the purveyor.

(iii) For existing connections where the purveyor identifies a low cross-connection hazard, the provisions of subsection (3)(d)(ii) of this section shall be met in accordance with a schedule acceptable to the purveyor.

(f) The purveyor shall ensure that bypass piping installed around any approved backflow preventer is equipped with an approved backflow preventer that:

(i) Affords at least the same level of protection as the approved backflow preventer that is being bypassed; and

(ii) Complies with all applicable requirements of this section.

(7) Approved backflow preventer inspection and testing.

(a) For backflow preventers that protect the public water system, the purveyor shall ensure that:

(i) A CCS inspects backflow preventer installations to ensure that protection is provided commensurate with the assessed degree of hazard;

(ii) Either a BAT or CCS inspects:

(A) Air gaps installed in lieu of approved backflow prevention assemblies for compliance with the approved air gap definition; and

(B) Backflow prevention assemblies for correct installation and approval status.

(iii) A BAT tests approved backflow prevention assemblies for proper operation.

(b) The purveyor shall ensure that inspections and/or tests of approved air gaps and approved backflow assemblies that protect the public water system are conducted:

(i) When any of the following occur:

(A) Upon installation, repair, reinstallation, or relocation of an assembly;

(B) Upon installation or replumbing of an air gap;

(C) After a backflow incident involving the assembly or air gap; and

(ii) Annually thereafter, unless the purveyor requires more frequent testing for high hazard premises or for assemblies that repeatedly fail.

(c) The purveyor shall ensure that inspections of AVBs installed on irrigation systems are conducted:

(i) At the time of installation;

(ii) After a backflow incident; and

(iii) After repair, reinstallation, or relocation.

(d) The purveyor shall ensure that approved backflow prevention assemblies are tested using procedures acceptable to the department, such as those specified in the most recently published edition of the USC Manual. When circumstances, such as, but not limited to, configuration or location of the assembly, preclude the use of USC test procedures, the purveyor may allow, on a case-by-case basis, the use of alternate (non-USC) test procedures acceptable to the department.

(e) The purveyor shall ensure that results of backflow prevention assembly inspections and tests are documented and reported in a manner acceptable to the purveyor.

(f) The purveyor shall ensure that an approved backflow prevention assembly or AVB, whenever found to be improperly installed, defective, not commensurate with the degree of hazard, or failing a test (if applicable) is properly reinstalled, repaired, overhauled, or replaced.

(g) The purveyor shall ensure that an approved air gap, whenever found to be altered or improperly installed, is properly replumbed or, if commensurate with the degree of hazard, is replaced by an approved RPBA.

(8) Recordkeeping and reporting.

(a) Purveyors shall keep cross-connection control records for the following time frames:

(i) Records pertaining to the master list of service connections and/or consumer's premises required in subsection (3)(j)(i) of this section shall be kept as long as the premises pose a cross-connection hazard to the purveyor's distribution system;

(ii) Records regarding inventory information required in subsection (3)(j)(ii) of this section shall be kept for five years or for the life of the approved backflow preventer whichever is shorter; and

(iii) Records regarding backflow incidents and annual summary reports required in subsection (3)(j)(iii) of this section shall be kept for five years.

(b) Purveyors may maintain cross-connection control records in original form or transfer data to tabular summaries.

(c) Purveyors may maintain records or data in any media, such as paper, film, or electronic format.

(d) The purveyor shall complete the cross-connection control program summary report annually. Report forms and guidance on completing the report are available from the department.

(e) The purveyor shall make all records and reports required in subsection (3)(j) of this section available to the department or its representative upon request.

(f) The purveyor shall notify the department, authority having jurisdiction, and local health jurisdiction as soon as possible, but no later than the end of the next business day, when a backflow incident is known by the purveyor to have:

(i) Contaminated the public water system; or

(ii) Occurred within the premises of a consumer served by the purveyor.

(g) The purveyor shall:

(i) Document details of backflow incidents contaminating the public water system on a backflow incident report form available from the department; and

(ii) Include all backflow incident report(s) in the annual cross-connection program summary report referenced in (d) of this subsection, unless otherwise requested by the department.

[Statutory Authority: RCW **70.119A.180** and **43.20.050**. WSR 08-03-061, § 246-290-490, filed 1/14/08, effective 2/14/08. Statutory Authority: RCW **43.20.050** (2) and (3) and **70.119A.080**. WSR 03-08-037, § 246-290-490, filed 3/27/03, effective 4/27/03. Statutory Authority: RCW **43.02.050** [43.20.050]. WSR 99-07-021, § 246-290-490, filed 3/9/99, effective 4/9/99. Statutory Authority: RCW **43.20.050**. WSR 91-02-051 (Order 124B), recodified as § 246-290-490, filed 12/27/90, effective 1/31/91. Statutory Authority: P.L. 99-339. WSR 89-21-020 (Order 336), § 248-54-285, filed 10/10/89, effective 11/10/89. Statutory Authority: RCW **34.04.045**. WSR 88-05-057 (Order 307), § 248-54-285, filed 2/17/88. Statutory Authority: RCW **43.20.050**. WSR 83-19-002 (Order 266), § 248-54-285, filed 9/8/83.]

Appendix C
Fire Hydrant Utilization Program

Appendix C

Fire Hydrant Utilization Program

1.0 Policy

Any person who wishes to withdraw water from a City of Marysville fire hydrant must apply to the Public Works Department for a permit and agree to follow all rules, regulations, and procedures that the Public Works Department may adopt in connection with granting and/or renewing such a permit. Access will be limited to one or more specific fire hydrants as designated by the Public Works Department. The initial permit period will expire after one year. If the need for fire hydrant water extends beyond one year, the permit must be renewed. Prior to utilizing any fire hydrant for filling, all vehicles must be inspected and approved as meeting requirements of the City's Cross-Connection Control Program. Similarly, any permit renewal requires that vehicles be re-inspected. The initial inspection and any permit-renewal inspections must be conducted and documented by a Public Works Department employee certified by the DOH as a Cross-Connection Control Specialist (CCS).

2.1 Procedures

The following sections define specific procedures and requirements associated with the two types of fire hydrant utilization permits. Implementation details for each type of permit are discussed below.

2.2 Vehicle Permits

To obtain a Vehicle Permit, the applicant must contact the Public Works Department and arrange to meet with a CCS at the Public Works Department offices (80 Columbia Avenue, Marysville, WA 98270). At the appointment, the applicant must complete a Vehicle Hydrant Utilization Permit Application. (Section [insert reference] presents a sample permit application.) The CCS will conduct an inspection to ensure that each vessel the applicant intends to use for water withdrawal incorporates an approved air gap suitable for eliminating potential for cross-connections with the City's water distribution system. After successful inspection, the MPWD will collect appropriate fees and issues a vehicle identification card that must be carried in the vehicle when withdrawing water from a hydrant. A deposit is required for the identification card.

Existing Vehicle Permit holders must have the air gaps on their vehicles inspected annually in order to renew the hydrant use permit. The CCP Administrator mails an air gap inspection reminder letter to the permit holder prior to the anniversary date of the initial permit.

For each tanker truck, trailer, or other vessel (vehicle) to be filled from a hydrant, the permit holder must pay the Public Works Department a $50.00 monthly Vehicle Hydrant Utilization Permit fee. This fee is imposed to cover the cost of water as well as the associated costs for permit recordkeeping.

For each vehicle to be filled from a hydrant, the permit holder must pay a $100.00 refundable deposit to obtain a vehicle identification card. The permit holder is responsible for assuring that the identification card is present on or in the vehicle and available for inspection at any time when the vehicle is being filled. The City will refund the deposit(s) when the permit holder returns the vehicle identification card(s) to the Public Works Department. That return will terminate the permit.

2.3 Site Permits

To obtain a Site Permit to withdraw water from a specific City fire hydrant for construction purposes, an applicant must complete relevant forms:

- Site Fire Hydrant Utilization Permit Application
- Hydrant Backflow Prevention Assembly and Meter Loan Agreement

- Hydrant Meter Checkout Form

These forms are available from the Public Works Department located at 80 Columbia Avenue.

A refundable deposit (minus $50.00 per month and damages) in the amount of $1,200.00 is required. If a hydrant meter is not deemed necessary by MPWD and not checked out, the deposit will be $600.00 (minus $50.00 per month and damages). The City will refund the customer's deposit after the customer returns all equipment in good condition (as verified via inspection by MPWD personnel) and all charges are paid.

Each month that the permit is in effect, the City will bill the customer a base fee of $50.00 plus water consumption charges based on the current City ordinance water rates.

2.4 Meter and Equipment Checkout

One year is the maximum length of time a meter and backflow prevention assembly can be checked out. If a permit holder needs a meter and assembly for more than one year, the MPWD will issue a new meter and assembly and retrieve the original unit for inspection and maintenance.

The MPWD provides the customer with:

- A fire hydrant meter with gate valve (or gate valve alone when a meter is not required)
- A section of fire hose
- A hydrant valve wrench
- A double check valve assembly (DCVA) or a reduced pressure back flow assembly (RPBA) according to the need
- Adapters for connecting either a fire hose or a garden hose to the hydrant meter
- An instruction sheet that details proper installation procedures

January 20, 2002
Marysville Public Works Department
80 Columbia Avenue
Marysville, WA 98270

To: [Insert Customer's Name]
[Insert Customer's Address]
[Insert Customer's City, State, and Zip Code]

Subject: Vehicle Fire Hydrant Utilization Permit Renewal

The vehicle with license number [insert vehicle license number] is due for an annual air gap inspection, as required by Chapter 246-290-490 of the Washington Administrative Code and by Chapter [insert appropriate chapter reference] of the Marysville Municipal Code. This inspection shall be performed free of charge by City of Marysville employee who holds a valid Certificate of Competency in cross-connection control issued by the Washington State Department of Health.

If the inspection discloses that the air gap is not satisfactory, please make the necessary repairs and have the vehicle re-inspected in accordance with the instructions above. Failure to do so would require denial of a hydrant use permit renewal.

If you have any questions concerning the above requirements, please contact me.

Sincerely,

John Doe
Cross-Connection Control Specialist
Phone: (360) 651-5100
Fax: (360) 651-5182

Marysville Public Works Department
Site Fire Hydrant Utilization Permit Application
And
Hydrant Backflow Prevention Assembly and Meter Loan Agreement

Applicant or Company Name	Applicant or Company Street Address
Designated Contact Person	Applicant or Company City & ZIP Code
Applicant or Company Phone Number	
Designated Hydrant Location	Intended Water Use
Start Date (Month/Day/Year)	Expiration Date (Month/Day/Year)
Meter Serial Number_____	RPBA Serial Number _____
	DCVA Serial Number _____
Issued By (MPWD Employee)	Issue Date (Month/Day/Year)

Fee Amount Paid ($) _____

Deposit Amount Paid ($) ____

Total Amount Paid ($) _____

Receipt Number _____

MPWD and/or Applicant Comments _____

The applicable monthly hydrant use fee, water consumption fee, and any costs to repair or replace City equipment or property will be deducted from the original deposit prior to refund.

Acknowledgment
The undersigned applicant hereby agrees to hold and save harmless the City of Marysville from any and all claims for damages, costs, expenses, or causes of action that may arise of installation and maintenance of the improvement or other equipment use hereto applied. The undersigned further agrees to remove the equipment and return it to the City upon notice from the City and agrees to reimburse the City for loss of or damage to the assembly or City property.

Print Applicant's Name	Sign Applicant's Name

Original to Applicant - Copy to Public Works Department File

Marysville Public Works Department

Hydrant Meter Checkout Form

The CCP Administrator should ensure that the Site Fire Hydrant Utilization Permit holder receives applicable items as marked below and understands the instructions for their proper installation and use.

_____	2-inch Meter With Control Valve, Handle, and Adapters.	Meter number	_____
_____	2-1/2-inch Fire Hose	Serial number	_____
_____	For Low Hazard Use: Double Check Valve Assembly with 2" Female to Hydrant Adapter Fitting	Serial number	_____
_____	For High Hazard Use: Reduced Pressure Backflow Assembly with 2-inch Female to Hydrant Adapter Fitting	Serial number	_____
_____	Hydrant Valve Wrench	Serial number	_____
_____	2-inch Male IPT to Hydrant Adapter Fitting	Serial number	_____
_____	2-inch x 3/4-inch Bushing with 3/4-inch Garden Hose Adapter Fitting	Serial number	_____
_____	2-inch Control Valve (Gate Valve) with Adapter Fittings	Serial number	_____

Instructions:

1. Attach the meter (or the 2-inch control valve, if a meter is not used) to the designated hydrant outlet.
2. Connect the fire hose to the meter at one end, and to the backflow prevention assembly at the other end. Observe the directional arrows on the backflow assembly.
3. With the 2-inch control valve closed, use the hydrant wrench to open and close the hydrant.
4. The control valve on the meter MUST be used to prevent damage to the hydrant and to the water distribution system. Always open and close the control valve slowly to prevent surges or water hammer that could cause damage to the water system.

STATEMENT OF UNDERSTANDING: I have received the components specified above and understand the instructions for their use.

_____ _____

Signature of Hydrant Permit Holder Date

Checked out by _____ Meter Reading _____ Date _____

Checked in by _____ Meter Reading _____ Date _____

Appendix D
Cross-Connection Control Coordination Agreements

Appendix D

Cross-Connection Control Coordination Agreements

WAC 246-290-490 (2)(d) requires the City to coordinate with local administrative authorities in matters concerning cross-connection control. The City is also required to document and describe such coordination in the written cross-connection control program.

1.0 CCP Agreements Within the City Limits

It is necessary for the CCS to be aware of backflow prevention assemblies used on fire services and fire sprinkler systems so that they can be included in the CCP database. Currently, the Marysville Fire District (MFD) regulates and tracks fire services and fire sprinkler systems. Thus, an agreement between the Public Works Department and the MFD is required to define CCP coordination procedures and responsibilities. These two City departments have been working together for many years on cross-connection control issues, and a written agreement is expected to be completed in 2002. This agreement will be inserted into this document for the record.

In general, the agreement will require the MFD to notify the CCP Administrator concerning backflow prevention devices installed or needed in customer water systems to isolate residential and commercial fire sprinkler systems. Similarly, the agreement will require the CCP Administrator to keep the MFD informed of any CCP-related water service disconnections or interruptions.

2.0 CCP Agreements Outside the City Limits

Snohomish County and the Snohomish Health District are the local administrative authorities for premises located in unincorporated areas of the county but served by the City's public water system. Thus, the MPWD is planning to develop written agreements with each of these agencies regarding coordination of cross-connection control efforts and responsibilities. The City has a long-standing record of cooperation with both agencies. Written agreements describing the respective roles and coordination efforts among the Health District, the County, and the City are expected to be completed in 2002. One agreement will designate that Snohomish Health District Inspectors advise the CCP Administrator whenever they identify a potential cross-connection. A second agreement will designate that the Snohomish County Building Division has jurisdiction, as Local Administrative Authority, for plumbing and cross-connection control in customer water systems located outside the City limits. When completed, these agreements will be incorporated in this appendix.

Appendix E
Sample Program Reports, Forms, Letters, and Notices

Appendix E

Sample Program Reports, Forms, Letters, and Notices

Monthly Cross-Connection Program Report

The CCP Administrator provides a program status report to the Director of Public Works on a monthly basis. A sample of this report is shown below.

City of Marysville

Sample Monthly Cross-Connection Program Report

October 2001

Activity or Inventory Item	Number This Month	Number Year To Date
Service Application Reviews	[insert number]	[insert number]
Plan Reviews	[insert number]	[insert number]
On-Site Inspections	[insert number]	[insert number]
Compliance Letters Sent	[insert number]	[insert number]
Air Gap Re-inspection Notices Sent*	[insert number]	[insert number]
Test Notices Sent	[insert number]	[insert number]
Assembly Test Reports Received	[insert number]	[insert number]
Total Number of Facilities Utilizing Backflow Prevention Assemblies**	Not Applicable	[insert total number of known facilities that utilize assemblies]
Total Number of Assemblies**	Not Applicable	[insert total number of known assemblies]

* To owners of tank trucks/vessels used in the Fire Hydrant Utilization Program.
** Based on locations or service addresses on record as having assemblies.

City of Marysville

Sample Annual Cross-Connection Control Summary Report
2002

Summary of System Assembly Inventory and Testing

Type of Assembly	Number of Assemblies in the System	Number of Annual Tests Completed	Number of Test Failures	Number of Repairs	Number of New Assembly Installations
AG	[insert number]	[insert number]	[insert number]	[insert number]	[insert number]
AVB	[insert number]	[insert number]	[insert number]	[insert number]	[insert number]
DCDA	[insert number]	[insert number]	[insert number]	[insert number]	[insert number]
DCVA	[insert number]	[insert number]	[insert number]	[insert number]	[insert number]
PVBA	[insert number]	[insert number]	[insert number]	[insert number]	[insert number]
RPBA	[insert number]	[insert number]	[insert number]	[insert number]	[insert number]
RPDA	[insert number]	[insert number]	[insert number]	[insert number]	[insert number]
SVBA	[insert number]	[insert number]	[insert number]	[insert number]	[insert number]
Total	[insert total]	[insert total]	[insert total]	[insert total]	[insert total]

Definitions:

AG	air gap
AVB	atmospheric vacuum breaker
DCDA	double check detector assembly
DCVA	double check valve assembly
PVBA	pressure vacuum breaker assembly
RPBA	reduced pressure backflow assembly
RPDA	reduced pressure detector assembly
SVBA	spill-resistant vacuum breaker assembly

Summary of Cross-Connection Control Program Activities

Activity or Inventory Item	Number for 2002
Service Application Reviews	[insert number]
Plan Reviews	[insert number]
On-Site Inspections	[insert number]
Compliance Letters Sent	[insert number]
Air Gap Re-inspection Notices Sent*	[insert number]
Test Notices Sent	[insert number]
Assembly Test Reports Received	[insert number]
Total Number of Facilities Utilizing Backflow Prevention Assemblies**	[insert total number of known facilities utilizing assemblies]
Total Number of Assemblies**	[insert total number of known assemblies]

* To owners of tank trucks/vessels used in the Fire Hydrant Utilization Program.
** Based on locations or service addresses on record as having assemblies.

Note that, for properties having high-risk facilities or processes as categorized in Table 4-1, this annual report must document on a case-by-case basis the City's hazard assessment, inspection results, and/or reasoning for each property that is allowed to operate without the mandated type of backflow prevention assembly.

January 20, 2002
Marysville Public Works Department
80 Columbia Avenue
Marysville, WA 98270

Customer Account No. [insert number]
Customer Water Meter No. [insert number]

Subject: Annual Backflow Prevention Assembly Testing Requirement

The City of Marysville operates and maintains a cross-connection control program in accordance with Washington State Department of Health requirements as defined in Section 246-290-490 of the Washington Administrative Code. Under those regulations, the City is responsible for protecting the public water system from contamination and associated health risks due to backflow by eliminating or controlling cross-connections. The City's program requires water customers with systems that pose certain types of potential health hazards to install and maintain approved backflow prevention devices. After the initial installation, inspection, and testing, the water customers are responsible on an annual basis for contracting with a state-certified Backflow Assembly Tester (BAT) to re-inspect and test the unit and to submit a successful test report to the City.

According to City records, one or more backflow prevention assemblies located on your property is due for annual inspection and testing as required under WAC 246-290-490 and Marysville Municipal Code Title 14. It is your responsibility to hire a BAT to perform and document annual testing of your assembly. As a courtesy, I have enclosed a list of state-certified Backflow Assembly Testers who work in the Marysville area. If you prefer not to employ one of the BATs listed, please contact the Washington State Department of Health at 1-800-525-2536 for help in identifying additional certified testers.

If testing discloses that your assembly is not operating properly, please have the necessary repairs made and then have the assembly retested. On completion of a test showing that the assembly is operating properly, the BAT should complete the enclosed Backflow Prevention Assembly Test Report Form and forward it to the Marysville Public Works Department no later than 30 days from the date of this notice.

If you have had your annual test performed within the last twelve months, or if you have any other questions relative to this letter, please call me. Thank you for doing your part in keeping our water supply healthy.

Sincerely,

John Doe
Cross-Connection Control Specialist
Phone (360) 651-5100
Fax (360) 651-5182

Enclosures (2)

January 20, 2002
Marysville Public Works Department
80 Columbia Avenue
Marysville, WA 98270

To: [Insert Tester's Name]
[Insert Company Name]
[Insert Company Address]
[Insert Company City, State, and Zip Code]

Subject: Update Information for Certified Backflow Assembly Tester (BAT) List

The City of Marysville administers a Cross-Connection Control Program to protect the potability of the City's water supply. As a courtesy to interested water system customers, the City compiles and makes available a list of state-certified Backflow Assembly Testers who are available to assist those customers in complying with the program.

Do you wish to remain on (or be added to) the City's Backflow Assembly Tester (BAT) List. Please check the appropriate box below. If your answer is yes, please submit an updated copy of your BAT and/or CCS certification card(s) including the expiration date. Also, please update (or submit) your company name, address, and phone number on this form. If you wish, include your Washington State license number for inclusion in the List.

If you do not wish to appear on the published List but you do expect to perform inspections and tests in the Marysville area, please submit a copy of your BAT certification card and a phone number where City personnel may contact you if there are questions concerning future Backflow Prevention Assembly Test Reports that you or your clients may submit to the City.

☐ I want to remain on the Marysville Area BAT List.

☐ I want to be added to the Marysville Area BAT List.

☐ I want to be removed from the Marysville Area BAT List.

BAT Certification No.: _____Expiration Date: _____

CCS Certification No.: _____Expiration Date: _____

Thank you in advance for completing this form and providing supporting information as soon as possible. I have enclosed a pre-addressed envelope to facilitate your response.

Sincerely,

John Doe
Cross-Connection Control Specialist
Phone (360) 651-5100
Fax (360) 651-5182

City of Marysville

Backflow Prevention Assembly Test Report Form
Please Use This Form Only!

ACCOUNT # _____

NAME OF PREMISE _____ Commercial ☐ Residential ☐

OWNER ADDRESS _____ CITY _____ ZIP _____

SERVICE ADDRESS _____ CITY _____ ZIP _____

CONTACT PERSON _____ PHONE ( ) _____ FAX ( ) _____

LOCATION OF ASSEMBLY _____

DOWNSTREAM PROCESS _____ DCVA ☐ RPBA ☐ PVBA ☐ OTHER _____

NEW INSTALLATION ☐ EXISTING ☐ REPLACEMENT ☐ OLD ASSEMBLY SERIAL NUMBER _____

ASSEMBLY LOCATION _____

ASSEMBLY MANUFACTURER _____ MODEL _____ SERIAL NO. _____ SIZE _____

IS ASSEMBLY FREEZE PROTECTED? _____ ARE THERE UNPROTECTED CROSS-CONNECTIONS? _____

ARE CONFINED SPACE PROCEDURES BEING FOLLOWED? _____

	DCVA / RPBA CHECK VALVE NO.1	DCVA / RPBA CHECK VALVE NO.2	RPBA	PVBA/SVBA AIR INLET
INITIAL TEST PASSED ☐ FAILED ☐	LEAKED ☐ CLOSED TIGHT ☐ _____ PSID	LEAKED ☐ CLOSED TIGHT ☐ _____ PSID	OPENED AT ____ PSID #1 CHECK _____ PSID AIR GAP OK? _____	OPENED AT _____ PSID DID NOT OPEN ☐
NEW PARTS AND REPAIRS	CLEAN REPLACE PART ☐ ☐ _____ ☐ ☐ _____ ☐ ☐ _____ ☐ ☐ _____	CLEAN REPLACE PART ☐ ☐ _____ ☐ ☐ _____ ☐ ☐ _____ ☐ ☐ _____	CLEAN REPLACE PART ☐ ☐ _____ ☐ ☐ _____ ☐ ☐ _____ ☐ ☐ _____	CHECK VALVE HELD AT _____ PSID LEAKED ☐ _____ CLEANED ☐ REPAIRED ☐
TEST AFTER REPAIRS	CLOSED TIGHT ☐ _____ PSID	CLOSED TIGHT ☐ _____ PSID	OPENED AT ____ PSID #1 CHECK _____ PSID	AIR INLET _____ PSID CHK VALVE _____ PSID

AIR GAP INSPECTION: Required minimum air gap separation provided? Yes ☐ No ☐ Detector Meter Reading _____

REMARKS: _____

_____ LINE PRESSURE _____ PSI

TESTERS SIGNATURE: _____ CERT. NO. _____ DATE _____

TESTERS NAME PRINTED: _____ TESTERS PHONE # ( ) _____

REPAIRED BY: _____ DATE _____

FINAL TEST BY: _____ CERT. NO. _____ DATE _____

GAUGE # _____ CALIBRATION DATE _____/_____/_____ SERVICE RESTORED YES ☐ NO ☐

January 20, 2002
Marysville Public Works Department
80 Columbia Avenue
Marysville, WA 98270

Customer Account No. [insert number]
Customer Water Meter No. [insert number]

Subject: Unrecorded Irrigation System Backflow Prevention Assembly

During a recent, routine inspection of water system features in your neighborhood, I observed that you have an irrigation system equipped with a backflow prevention assembly. Washington State Department of Health regulations require that assemblies such as yours be inspected for proper initial installation, tested for proper initial operation, and then tested annually to ensure continued proper operation. The regulations also require that the associated inspection and test reports be filed with the City's Public Works Department. Our current records do not include your assembly. I am attaching a sheet titled "Backflow Prevention/Cross-Connection Control for Irrigation Systems" that summarizes the requirements for installing and testing assemblies such as yours. As a courtesy, I have enclosed a list of state-certified Backflow Assembly Testers who work in the Marysville area. If you prefer not to employ one of the BATs listed, please contact the Washington State Department of Health at 1-800-525-2536 for help in identifying additional certified testers.

Experience has shown that proper backflow protection is essential in ensuring a healthy water supply. Therefore, I thank you in advance for your cooperation in complying with the referenced regulations. If you have any questions, please contact me.

Sincerely,

John Doe
Cross-Connection Control Specialist
Phone: (360) 651-5100
Fax: (360) 651-5182

Enclosures (2)

January 20, 2002
Marysville Public Works Department
80 Columbia Avenue
Marysville, WA 98270

Customer Account No. [insert number]
Customer Water Meter No. [insert number]

Subject: Unapproved Auxiliary Water Supply Backflow Prevention Requirement

During a recent, routine inspection of water system features in your neighborhood, I observed that you have an irrigation system equipped with a backflow prevention assembly. Washington State Department of Health regulations require that assemblies such as yours be inspected for proper initial installation, tested for proper initial operation, and then tested annually to ensure continued proper operation. The regulations also require that the associated inspection and test reports be filed with the City's Public Works Department. Our current records do not include your assembly. I am attaching a sheet titled "Backflow Prevention/Cross-Connection Control for Irrigation Systems" that summarizes the requirements for installing and testing assemblies such as yours. As a courtesy, I have enclosed a list of state-certified Backflow Assembly Testers who work in the Marysville area. If you prefer not to employ one of the BATs listed, please contact the Washington State Department of Health at 1-800-525-2536 for help in identifying additional certified testers.

Experience has shown that proper backflow protection is essential in ensuring a healthy water supply. Therefore, I thank you in advance for your cooperation in complying with the referenced regulations. If you have any questions, please contact me.

Sincerely,

John Doe
Cross-Connection Control Specialist
Phone: (360) 651-5100
Fax: (360) 651-5182

Enclosures (2)

January 20, 2002
Marysville Public Works Department
80 Columbia Avenue
Marysville, WA 98270

Customer Account No. [insert number]
Customer Water Meter No. [insert number]

Subject: Irrigation System Backflow Prevention Requirements

Per our telephone conservation, I am enclosing information you requested applicable to backflow prevention requirements for residential irrigation systems:

- *Backflow Prevention/Cross-Connection Control for Irrigation Systems*
- *List of State-Certified Backflow Assembly Testers*

If you have any questions about this information, please contact me. Thank you for your cooperation in helping to ensure a healthy water supply for your family and neighbors.

Sincerely,

John Doe
Cross-Connection Control Specialist
Phone: (360) 651-5100
Fax: (360) 651-5182

Enclosures (2)

January 20, 2002
Marysville Public Works Department
80 Columbia Avenue
Marysville, WA 98270

Customer Account No. [insert number]
Customer Water Meter No. [insert number]

Subject: Residential Fire Sprinkler System Backflow Prevention Requirements

The City of Marysville operates and maintains a cross-connection control program in accordance with Washington State Department of Health requirements as defined in Section 246-290-490 of the Washington Administrative Code. Under those regulations, the City is responsible for protecting the public water system from contamination and associated health risks due to backflow by eliminating or controlling cross-connections. For residential fire sprinkler systems, the program requires that water customers install and maintain approved backflow prevention devices as follows:

- For systems with no chemicals added, a Double Check Valve Assembly (DCVA) is required.
- For systems that add chemicals or utilize auxiliary sources of water, a Reduced Pressure Backflow Assembly (RPBA) is required.

These backflow prevention assembly installations must be located on the customer's side of the City's water meter. The initial installation must be inspected and approved by the City. Prior to inspection by the City, a Washington State Certified Backflow Assembly Tester (BAT) must inspect the assembly for proper installation, test it for proper operation, complete and sign a Backflow Prevention Assembly Test Report, and submit a copy of that report to the Marysville Public Works Department. After the initial installation, inspection, and testing, the water customer is responsible for contracting with a BAT on an annual basis to re-inspected the unit and to submit re-inspection reports to the City.

For additional information or for answers to any questions you may have relative to backflow prevention, please contact me. Thank you for your cooperation in this important community health issue.

Sincerely,

John Doe
Cross-Connection Control Specialist
Phone: (360) 651-5100
Fax: (360) 651-5182

Enclosures (2)

January 20, 2002
Marysville Public Works Department
80 Columbia Avenue
Marysville, WA 98270

Customer Account No. [insert number]
Customer Water Meter No. [insert number]

Subject: Irrigation System Backflow Prevention Requirements

The City of Marysville implements a cross-connection control program in accordance with Washington State Department of Health requirements as defined in Section 246-290-490 of the Washington Administrative Code. Under those regulations, the City is responsible for protecting the public water system from contamination and associated health risks due to backflow by eliminating or controlling cross-connections. For residential irrigation systems, the program requires that water customers install and maintain approved backflow prevention devices as follows:

- For systems with no chemicals added, a Double Check Valve Assembly (DCVA) is required.
- For systems that add chemicals or utilize auxiliary sources of water, a Reduced Pressure Backflow Assembly (RPBA) is required.

These backflow prevention assembly installations must be located on the customer's side of the City's water meter. The initial installation must be inspected and approved by the City. Prior to inspection by the City, a Washington State Certified Backflow Assembly Tester (BAT) must inspect the assembly for proper installation, test it for proper operation, complete and sign a Backflow Prevention Assembly Test Report, and submit a copy of that report to the Marysville Public Works Department. After the initial installation, inspection, and testing, the water customer is responsible for contracting with a BAT on an annual basis to re-inspected the unit and to submit re-inspection reports to the City.

For additional information or for answers to any questions you may have relative to backflow prevention, please contact me. Thank you for your cooperation in this important community health issue.

Sincerely,

John Doe
Cross-Connection Control Specialist
Phone: (360) 651-5100
Fax: (360) 651-5182

Enclosures (2)

January 20, 2002
Marysville Public Works Department
80 Columbia Avenue
Marysville, WA 98270

Customer Account No. [insert number]
Customer Water Meter No. [insert number]

Subject: Commercial/Multi-Dwelling Fire Sprinkler System Backflow Prevention Requirements

The City of Marysville operates and maintains a cross-connection control program in accordance with Washington State Department of Health requirements as defined in Section 246-290-490 of the Washington Administrative Code. Under those regulations, the City is responsible for protecting the public water system from contamination and associated health risks due to backflow by eliminating or controlling cross-connections. For commercial and multi-dwelling fire sprinkler systems, the program requires that water customers install and maintain approved backflow prevention devices as follows:

- For systems with no chemicals added, a Double Check Detector Assembly (DCDA) is required.
- For systems that add chemicals or utilize auxiliary sources of water, a Reduced Pressure Detector Assembly (RPDA) is required.

These backflow prevention assembly installations must be located on the customer's side of the City's water meter. The initial installation must be inspected and approved by the City. Prior to inspection by the City, a Washington State Certified Backflow Assembly Tester (BAT) must inspect the assembly for proper installation, test it for proper operation, complete and sign a Backflow Prevention Assembly Test Report, and submit a copy of that report to the Marysville Public Works Department. After the initial installation, inspection, and testing, the water customer is responsible for contracting with a BAT on an annual basis to re-inspected the unit and to submit re-inspection reports to the City.

For additional information or for answers to any questions you may have relative to backflow prevention, please contact me. Thank you for your cooperation in this important community health issue.

Sincerely,

John Doe
Cross-Connection Control Specialist
Phone: (360) 651-5100
Fax: (360) 651-5182

Enclosures (2)

January 20, 2002
Marysville Public Works Department
80 Columbia Avenue
Marysville, WA 98270

Customer Account No. [insert number]
Customer Water Meter No. [insert number]

Subject: FINAL NOTICE – Annual Backflow Prevention
Assembly Testing Requirement

The Public Works Department has not received a test report for one or more backflow prevention assemblies installed on your property. As specified in Chapter 246-290-490 of the Washington Administrative Code and in Title 14 of the Marysville Municipal Code, failure to comply with testing and reporting for the assembly may result in termination of water service until the City has received evidence of a successful test.

A state-certified Backflow Assembly Tester (BAT) must test your assembly and submit a successful report to the Public Works Department within fifteen (15) days of the above date. Otherwise, your water service will be subject to disconnection. As a courtesy, I have enclosed a list of state-certified Backflow Assembly Testers who work in the Marysville area. If you prefer not to employ one of the BATs listed, please contact the Washington State Department of Health at 1-800-525-2536 for help in identifying additional certified testers.

For additional information or for answers to any questions you may have relative to backflow prevention, please contact me. Thank you for your cooperation in this important community health issue.

Sincerely,

John Doe
Cross-Connection Control Specialist
Phone: (360) 651-5100
Fax: (360) 651-5182

Enclosures (1)

January 20, 2002
Marysville Public Works Department
80 Columbia Avenue
Marysville, WA 98270

Customer Account No. [insert number]
Customer Water Meter No. [insert number]

Subject: FINAL NOTICE - Fire Sprinkler Backflow
Prevention Assembly Testing Requirement

The Public Works Department has not received a test and maintenance report for one or more backflow prevention assemblies installed to isolate the fire sprinkler system(s) located on your premises.

As specified in Chapter 246-290-490 of the Washington Administrative Code, failure to comply with testing and reporting for the assembly may result in termination of water service until the City has received evidence of a successful test.

Testing must be completed and reports filed with the City within fifteen (15) days of the above date, or your water service will be subject to disconnection. Please contact the Washington State Department of Health at 1-800-525-2536 for information on locating certified testers.

For additional information or for answers to any questions you may have relative to backflow prevention, please contact me. Thank you for your cooperation in this important community health issue.

Sincerely,

John Doe
Cross-Connection Control Specialist
Phone: (360) 651-5100
Fax: (360) 651-5182

City of Marysville

Water Supply Backflow Prevention Requirements

Please complete and return this form to help us in advising you to meet Washington Administrative Code (WAC 246-290-490) regarding Cross-Connection Control. Submit building mechanical plans for City review and approval.

Water Service Address: _____
Owner's Name:_____
Owner's Phone Number: _____
Owner's Mailing Address: _____
Applicant's Name: _____
Applicant's Phone Number: _____
Applicant's Mailing Address: _____
Applicant's Relationship to Owner: ____
Type of Building: _____
Height of Building: _____

REQUIREMENTS: Approved backflow prevention is required to implement cross-connection control for service connections. For services sized 1-inch or larger and/or for services with hazards listed below or on Page 2 [or, on the reverse side] of this form, call the Marysville Public Works Department and consult with the Cross-Connection Control Program Administrator.

- ☐ Provide approved backflow prevention for irrigation systems.
- ☐ Provide approved backflow prevention for domestic buildings that exceed 3 stories.
- ☐ Provide approved backflow prevention for domestic buildings that extend 33 feet or more above the water main.
- ☐ Provide approved backflow prevention for all fire protection systems.
- ☐ Provide approved backflow prevention for water supplies to heating system boilers, swimming pools, hot tubs, solar heating systems, heat pumps, cooling towers, and air conditioning units.

Type of facility: (e.g., single-family residence, multi-family residence, car wash, medical clinic, shopping center, etc.):

_____

Planned water uses other than those noted above (e.g., carbonation, industrial cooling, etc.):

_____
_____
_____

Note: All backflow prevention assemblies must be included in the current Washington State Department of Health list of approved cross-connection control assemblies. All installations must be inspected and tested by a state-certified backflow assembly tester (BAT). Assemblies must be installed in the orientation for which they are approved. Refer to Page 2 of this form for specific backflow prevention requirements.

If you have any questions regarding the information above, contact:

Marysville Public Works Department
80 Columbia Avenue
Marysville, WA 98270
(360) 651-5100

Premises, Facilities, and Processes Requiring Mandatory Service Protection Unless No Actual Hazard Exists

Cross-Connection Control Regulation in Washington State
WAC 246-290-490 (4)

Backflow prevention assemblies, appropriate for the degree of hazard or air gaps and in some cases both, shall be installed at the service connection or within the following facilities, unless in the judgment of the water purveyor and the department, no hazard exists: Hospitals, mortuaries, clinics, laboratories, piers and docks, sewage treatment plants, food and beverage processing plants, chemical plants using water process, metal plating industries, petroleum processing or storage plants, radioactive material processing plants or nuclear reactors, car washes, facilities having a nonpotable auxiliary water supply, and others specified by the department.

Premises Category or Activity	Presumed Health Hazard	Minimum Required Protection
Car washes	High	RPBA
Chemical plants (including ice manufacturing plants and battery manufacturing or repair facilities)	High	RPBA
Food processing plants (e.g., canneries, packing houses, slaughter houses, cold storage plants)	High	RPBA
Beverage bottling plants	High	RPBA
Film processing facilities	High	RPBA
Hospitals, medical centers, medical/dental clinics, veterinary clinics, nursing homes, blood plasma centers	High	RPBA
Laboratories	High	RPBA
Metal plating industries	High	RPBA
Mortuaries	High	RPBA
Premises with irrigation systems that use City water in combination with chemical addition (e.g., parks, playgrounds, mobile home/RV parks, golf courses, cemeteries, and estates)	High	RPBA
Petroleum processing or storage plants	High	RPBA
Piers and docks (e.g., graving docks, boat marinas, dry docks)	High	RPBA
Commercial laundries and dry cleaners	High	RPBA
Properties where hazard survey access is restricted or denied	High	RPBA
Premises with unapproved auxiliary water supply interconnected with the potable water supply	High	RPBA
Radioactive material processing plants or nuclear reactors	High	AG Note 1
Wastewater and/or sewage treatment plants	High	AG Note 1
Wastewater lift stations and pumping stations	High	RPBA
Agricultural facilities (e.g., farms, dairies)	High	RPBA
Premises where both reclaimed water and potable water are provided	High	RPBA
All properties classified as Commercial (including shopping centers)	High	RPBA
Premises having boilers, heat exchangers, solar water heaters, swimming pools, spas, ponds, irrigation systems (with no chemical addition), etc.	High	RPBA

Premises having an auxiliary water supply and having internal cross-connections that are not correctable	High	RPBA
Premises that handle any substance that is objectionable (not a health hazard) in a manner that poses a potential cross-connection	Low	DCVA
Premises having low health cross-connection hazards that are unavoidable or not correctable (e.g., buildings over 30 feet tall)	Low	DCVA
Premises having a repeated history of cross-connections being established or re-established	High	RPBA
Premises with activities that involve toxic substances and/or materials dangerous to health	High	RPBA
Premises with approved auxiliary water supplies	Low	DCVA
Residential flow-through or combination fire protection systems constructed of potable water piping and materials	Low	Not Required
Privately owned fire hydrants and/or service connections with fire protection systems other than flow-through or combination systems that	Low	On-site DCVA
Premises with fire sprinkler systems that utilize anti-freeze, chemical additives, or auxiliary water supplies	High	RPBA (or RPDA)
Premises that practice graywater use and/or stormwater reuse	High	RPBA
Premises with irrigation systems that use City water only, with no chemical addition	Low	DCVA
Recreational Vehicle Parks	High	RPBA
New Water Main Construction	High	RPBA
Premises having complex plumbing arrangements and/or plumbing potentially subject to frequent changes that make it impracticable to assess whether cross-connection hazards exist or may exist in the future	High	RPBA

Notes:

3. Or an RPBA plus an in-plant AG
4. Or a DCDA

Definitions

AG	approved air gap
DCDA	double check detector assembly
DCVA	double check valve assembly
RPBA	reduced pressure backflow assembly
RPDA	reduced pressure detector assembly

Appendix F
Backflow Prevention
Assembly Installation Requirements

Appendix F

Backflow Prevention Assembly Installation Requirements

1.0 Introduction

This appendix describes guidelines, considerations, and requirements for designing and installing backflow prevention assemblies. Generally, assemblies should be installed in accordance with the City of Marysville's Design and Construction Standards and Specifications, the Uniform Plumbing Code, the Uniform Building Code, and/or the PNWS-A WW A Cross Connection Control Manual, whichever is more restrictive.

2.0 General Installation Requirements

This section describes general installation practices common to all types of backflow prevention assemblies.

1. Any backflow prevention assembly installed as a component of new construction must be selected from the current list backflow prevention assemblies approved for use in Washington State available through the DOH.

2. Installation or replacement of backflow prevention assemblies in existing plumbing systems, especially fire sprinkler systems, must include any necessary system up sizing to assure adequate flow capacity for continued proper operation of the system.

3. Backflow prevention assemblies installed to retrofit existing systems must be installed by a licensed fire protection sprinkler system contractor in accordance with RCW 18.160 and meet the approval of the Fire Chief.

4. Where an approved assembly is deemed necessary, the customer must submit the model of the assembly and the installation plans to the Public Works Department for review and approval prior to installation.

5. Approved assemblies must be installed downstream of the City's service connection or water meter and on the customer's side of the property line.

6. An assembly located more than five (5) feet above the floor or ground level must include a permanent platform for a tester or maintenance person to stand on.

7. For an assembly installed within a vault or other enclosure, adequate space must be provided to allow unhampered access for testing and maintenance.

8. No part of an assembly may be submerged under water nor installed in a location subject to flooding. If an assembly is installed in a vault or basement, adequate drainage must be provided.

9. In cases where access to a vault is required, any persons entering the vault must comply with local, state, and federal safety rules regarding confined space entry.

10. Assemblies 2-1/2 inches and larger must have support blocks to prevent damage to the assembly or piping.

11. Reduced Pressure Backflow Assemblies may be installed in a vault only if the relief valve discharge can be drained to daylight. The drain must have adequate capacity to carry the full rated flow of the assembly and must be screened at both ends. The relief valve discharge must incorporate an approved air gap.

12. Any assembly that incorporates an air inlet or relief port must be installed outside of any enclosure or hooded area that contains or may contain corrosive, toxic, or poisonous fumes.

13. For an assembly with an air inlet or relief port located inside a building, give consideration to collecting and/or draining water that may spill during testing or that may be released if a relief port or check valve fails.

14. Assembly testing and/or maintenance interrupts water service temporarily. For installations requiring uninterrupted water service, a bypass or parallel backflow prevention assembly should be installed. The bypass or parallel assembly must be of the same type as the primary assembly.

15. Backflow prevention assemblies should be protected from severe weather and accidental physical damage.

16. When choosing a location for a backflow assembly, consider the possibility of theft and vandalism.

17. The installer should thoroughly flush associated water lines before installing an assembly to remove debris that could foul check valves or relief ports.

18. Consider landscaping requirements when planning installation of aboveground assemblies that will be in public view.

3.0 Freeze Protection

Experience has shown that freezing can damage backflow prevention assemblies beyond repair. Therefore, design and installation of assemblies should provide for adequate freeze protection. Specifically, all backflow prevention assemblies that are installed above ground level, or in shallow boxes or vaults, must have provisions for freeze protection. Freeze protection may be provided in two ways: installing the unit in a permanent, heated location; or shutting off and draining the service prior to arrival of severe cold weather. Because backflow prevention assemblies are typically installed in water services that require continuous operation, it is seldom appropriate to shut down a system and drain the assembly.

4.0 Drainage

Testing and maintenance activities require that backflow prevention assemblies be drained occasionally. Provision for proper assembly drainage begins in the design stage. The following are major points that the designer and/or installer should consider:

A shutoff valve should be installed on the upstream side of the assembly. If possible, shutoff valves should be located below ground level and inside the building. A drain valve should be installed between the shutoff valve and the assembly. If the shutoff valve is installed inside the building, the drain valve can effectively drain all the piping. If the shutoff valve is located in the ground, a drain valve or stop and waste valve can become submerged inlet and pose a back-siphonage hazard.

5.0 Thermal Expansion

Thermal expansion is the pressure increase due to expansion of water contained within a closed (i.e., restricted) volume resulting from a rise in water temperature. If the pressure caused by thermal expansion is not relieved properly, it can cause serious damage to the customer's plumbing system. As an example, excessive water pressure inside a hot water storage tank, if not relieved, may cause the tank to explode. Customer hot water tanks and associated plumbing components are normally protected by a temperature/pressure relief valve located at or near the top of the hot water storage tank. In addition, plumbing codes in certain jurisdictions require installation of separate thermal expansion tanks to achieve pressure relief. Problems can arise in a heated water piping system when the system becomes closed or restricted due to installation of a backflow prevention assembly that includes one or more check valves. Unless properly installed and maintained, the assembly may prevent necessary thermal expansion.

6.1 Specific Installation Requirements

The following sections describe installation practices associated with specific types of backflow prevention assemblies.

6.2 Air Gap Separation Installation Requirements

Air gap separations are designed to prevent potential backflows associated with severe and high health hazard cross-connection assessments.

An approved air gap is a physical separation between the free flowing discharge end of the City's supply line and the overflow rim of an open or non-pressurized receiving vessel. The separation must be oriented vertically and have a height of at least twice the diameter of the inlet pipe, but never less than one inch.
When an air gap separation is affected by an obstruction (e.g., sidewalls), the obstruction may restrict flow of air into the supply pipe and nullify the effectiveness of the gap in preventing back-siphonage. When affected by obstructions, the vertical air gap separation must be at least three times that of the supply pipe diameter. Appendix K includes a rigorous definition of and requirements for an approved air gap.

6.3 Reduced Pressure Backflow Assembly (RPBA) Installation Requirements

A reduced pressure backflow assembly (RPBA) is designed to prevent backflow caused by backpressure and backsiphonage for both low and high health hazard assessments.

The following installation practices are common to all RPBAs and reduced pressure detector assemblies.

1. An RPBA must be installed in the configuration(s) and orientation(s) for which is has been tested and approved. Any other configuration or orientation may hinder its ability to prevent backflow.

2. An RPBA should be installed above ground level, or above the maximum flood level, whichever is higher.

3. An RPBA must be protected from freezing, severe weather, and physical damage.

4. Fluctuating water supply pressure may result in nuisance dripping and potential fouling of the assembly. Depending upon the degree of fluctuating pressure, the assembly may discharge water from time to time.

5. Approved assemblies larger than two (2) inches shall have a minimum clearance of twelve (12) inches on the backside and twenty-four (24) inches on the test cock side, twelve (12) inches plus the nominal size of the assembly below the assembly and thirty- six (36) inches above the assembly.

6. Assemblies less than two (2) inches shall have a minimum clearance of six (6) inches on the backside, twelve (12) inches on the test cock side of the assembly, and twelve (12) inches plus the nominal size of the assembly below the assembly and thirty-six (36) inches above the assembly.

7. An RPBA should be inspected as soon as possible after installation to insure proper configuration.

8. An RPBA should be tested as soon as possible after installation to verify proper operation.

6.4 Double Check Valve Assembly (DCVA) Installation Requirements

A double check valve assembly (DCVA) is designed to prevent backflow caused by backpressure and back-siphonage associated with low health hazard assessments. The following installation practices are common to all DCVAs.

1. The DCVA must be installed in the configuration(s) and orientation(s) for which is has been tested and approved. Any other configuration or orientation may hinder its ability to prevent backflow.

2. Ideally, a DCVA should be installed above ground level, or above the maximum flood level, whichever is higher. However, a DCVA may be installed in a basement or pit located below ground level. If installation is below ground, adequate room for testing and maintenance must be provided. Plugs must be installed in the test cocks to reduce the risk of siphoning groundwater into the water line through a leaking test cock. The test cocks must be installed facing upward or to one side. Area drainage must be provided to prevent the assembly from becoming submerged.

3. Assemblies larger than two (2) inches shall have a minimum clearance of twelve (12) inches on the backside, twenty-four (24) inches on the test cock side, twelve (12) inches plus the nominal size of the assembly below the assembly, and thirty-six (36) inches above the assembly.

4. Assemblies smaller than two (2) inches shall have a minimum clearance of six (6) inches on the backside, twelve (12) inches on the test cock side, twelve (12) inches plus the nominal size of the assembly below the assembly, and thirty-six (36) inches above the assembly.

5. A DCVA should be inspected as soon as possible after installation to insure proper configuration.

6. A DCVA should be tested as soon as possible after installation to verify proper operation.

6.5 Double Check Detector Assembly (DCDA) Installation Requirements

A double check detector valve assembly (DCDA) is designed to prevent backflow caused by backpressure and backsiphonage. These assemblies are used both for low health hazard installations and on fire protection systems.

The following installation practices are common to all DCDAs.

1. The DCDA must be installed in the configuration(s) and orientation(s) for which is has been tested and approved. Any other configuration or orientation may hinder its ability to prevent backflow.

Ideally, a DCDA should be installed above ground level, or above the maximum flood level, whichever is higher. However, a DCDA may be installed in a basement or pit located below ground level. If installation is below ground, adequate room for testing and maintenance must be provided. Plugs must be installed in the test cocks to reduce the risk of siphoning groundwater into the water line through a leaking test cock. The test cocks must be installed facing upward or to one side. Sufficient area drainage must be provided to prevent the assembly from becoming submerged.

2. Assemblies larger than two (2) inches shall have a minimum clearance of twelve (12) inches on the backside, twenty-four (24) inches on the test cock side, twelve (12) inches plus the nominal size of the assembly below the assembly, and thirty-six (36) inches above the assembly.

Assemblies smaller than two (2) inches shall have a minimum clearance of six (6) inches on the backside, twelve (12) inches on the test cock side, twelve (12) inches plus the nominal size of the assembly below the assembly, and thirty-six (36) inches above the assembly.

3. A DCDA should be inspected as soon as possible after installation to insure proper configuration.

4. A DCDA should be tested as soon as possible after installation to verify proper operation.

Appendix G
Installing and Testing Fire Service Backflow Prevention Assemblies

Appendix G

Installing and Testing Fire Service Backflow Prevention Assemblies

I. All new fire protection systems of American Waterworks Association (AWWA) M-14 Classes I through VI should have a minimum of Double Check Valve Assembly (DCVA) or Double Check Detector Assembly (DCDA) where a low health hazard exists, and a minimum of a Reduced Pressure Backflow Assembly (RPBA) or Reduced Pressure Detector Assembly (RPDA) where a high health hazard exists.

II. A decision regarding the use of the UL listed alarm check for Class I and II fire systems must be made with caution, in light of the Uniform Plumbing Code, State regulations, and guidance manuals that mandate the use of a DCVA or the DCDA as minimum backflow protection. The issue of liability from contamination by the various metals found in fire services that exceed the maximum contaminant levels (MCL) listed by the federal environmental agency (EPA), and presence of heterotrophic plate count bacteria (HPA) that can adversely affect a small portion of the population must be considered before anything less than a DCVA is accepted.

III. Jurisdictions that choose to retrofit rather than ignore fire services that do not have the minimum DCVA or DCDA should do so on a priority basis, and based on certain considerations as follows:

A. Retrofit must be based on a priority basis, with number one below being highest priority.

1. Chemicals, such as antifreeze are added, or an unapproved auxiliary water supply.
2. A backflow incident.
3. No backflow prevention assembly, such as a single check valve, or an UL-approved alarm check valve.
4. Failing or failed single check valve and/or a non-UL-approved alarm check valve.
5. A UL listed alarm check valve that is properly maintained in accordance with NFPA 25 (NFPA 1995b).

B. There are considerations that must be taken into account when retrofitting an existing fire service.

1. Impacts of assembly installation on sprinkler performance.
2. Cost of retrofitting, including hydraulic analysis.
3. Difficulty of assembly installation.

Notes for Double Check Detector Assemblies for 2.5-Inch Horizontal/Inside Installation

- UL- or FM-listed, soft seated, DOH-approved Double Check Detector Valve Assembly. Assembly must be installed in the same orientation for which it was approved. The meter must be mounted remotely, either affixed to an external wall or enclosed in a building meter box.

- Uni-flange with setscrews or mj x fl adapter with megalug or galvanized shackle to main with 2-3/4" rods, or mj retainer glands for both upstream and downstream of the assembly.

- Ductile iron pipe (sized as required) Class 52.

- 2-Galvanized adjustable pipe supports for 2-1/2"-diameter and larger pipe.

- A sufficiently sized floor drain or wall footing drain must be provided in the same room. Only construction materials that can withstand occasional submergence will be allowed.

- External door facing street with key is required. The hardware must be a "Best" system 6-pin "EA" core key or other key. The width and height of the door(s) must exceed the width and height of the assembly. The assembly must be fully accessible for testing and repairs.

- A 2-inch flushing line to the outside wall or a domestic meter in same room must be provided.

- The room should be insulated with R-19 insulation or greater and heated to above freezing.

Notes:

1. Tee and gate valve required on the main.

2. Single check detector assemblies are not approved as backflow prevention assemblies.

3. Assembly requires certification upon installation and annually thereafter.

4. Test cocks are required to be plugged.

5. Maximum height of assembly or OS&Y shall be 5 feet unless an OSHA-approved access platform is provided.

6. All dimensions are minimum clearance requirements.

7. Fire department pumper port must be downstream of assembly.

8. Neither OS&Y that are part of the backflow assembly can be used as a post indicator valve.

Testing:

I. Personnel Requirements.

   A. The backflow assembly tester (BAT) must be currently certified by the State of Washington.

   B. A safety observer is required during entry into confined spaces.

   C. It is recommended that a backflow assembly tester carry appropriate insurance to protect against liability.

II. Test Procedures.

A. Minimum Requirements.

1. Observation of Safety Rules in section III below.
2. Notify the property owner, the building occupants, the fire alarm monitoring company (if applicable), and the Marysville Fire District.
3. Test according to one of the standards prescribed in Section B below.
4. Test meter flow.
5. Note meter reading on test report.
6. Open all valves after tests are completed.
7. Notify pertinent people that the fire service is back in service.

B. Accepted standards for testing a double check detector assembly (DCDA).

1. Cross Connection Control Manual: Accepted Procedure and Practice, Sixth Edition, December 1995 (PNWS-AWWA).
2. American Society of Sanitary Engineering Professional Qualification Standards Backflow Prevention Assemblies--Series 500.
   a. Standard 5010-1048-1 for a Duplex gauge.
   b. Standard 5010-1048-2 for a Differential gauge using 2 hoses.
   c. Standard 5010-1048-3 for a Differential gauge using 1 hose.
   d. Standard 5010-1048-4 for a Sight Tube.
3. University of Southern California Foundation for Cross-Connection Control and Hydraulic Research Manual of Cross-Connection Control.

III. Minimum Safety Procedures

A. Tools/Personnel

1. Gauges and proper repair tools.
2. Blower; 600 CFM minimum.
3. Gas Detector-detection for oxygen, hydrogen sulfide, and combustibles (LEL) as a minimum (per WISHA standards)
4. Pump (for dewatering) as needed.
5. Tripod, body harness, and rope for entry into confined spaces.
6. Attendant to be “top man” for confined space entries.

B. Precautions (Not all inclusive)

1. Old assemblies where the cover is used as the spring retainer.
2. Overhead installation should have permanent OSHA platforms provided by the customer.
3. Ground and electrical hazards.
4. Thrust restraint should be in space if assembly needs to be pulled.
5. Hazardous materials in the vicinity.

6. Traffic hazards.

7. Personal Protective Equipment, such as, a hardhat, orange vest, etc.

C. Confined Space Entry Procedures.

1. It shall be assumed that all double check detector assemblies in vaults are in confined spaces and that the appropriate regulations and laws applying to such shall be observed. Communication and coordination before work begins is essential to assure that the minimum confined space entry requirements are being met.

2. WAC 296-62-145 to 296-62-14529) Part M addresses Confined Spaces.

Appendix H
List of Certified Backflow Assembly Testers

Appendix H
List of Certified Backflow Assembly Testers

Snohomish, King, Pierce, and Whatcom Counties

The City of Marysville has assembled the following list of state-certified backflow assembly testers (BATs) and provides copies to our water customers as a courtesy. This list does not include all certified BATs for the region. Rather, it includes those who have indicated their valid certification and their availability to test in the Marysville service area. The City does not intend for this list to constitute a recommendation of any individual BAT. Further, the City has no control over the price a given BAT will charge a customer for testing or repairing a backflow prevention assembly. The City expressly disclaims any responsibility for the quality of work or any other aspect of the services that may be provided by any of these BATs. Note that any water customer is free to identify and hire any BAT who holds current DOH certification, regardless of whether or not that individual's name appear in the following list.

A-BAT Backflow Assembly Testing & Service
PO Box 2374
Everett, W A 98203
425-334-6423/425-886-3260 Pager
King, Ron

Advance Testing & Service
PO Box 1485
Everett, WA 98206
425-337 -4175/425-339-8998 Pager
Sunny, Roger E.

Bell, James
Everett, WA
425-359-2024
Bell, James

Clearwater Backflow Service
2401 Rucker Avenue, Suite 13
Everett, WA 98201
425-257 -2013/425-330- 7645 Cell Phone
Plumbers1226@aol.com Paxline @ Providence.org
Axline, Patrick

Conner, Michael D.
2502 Pine Street
Everett, WA 98201-3232 425-501-2148
Conner, Michael D.

Kim, Young I.
4222 123rd Place N E
Marysville, W A 98271
425-343-6128/425-343-6128 Cell Phone/206-316-4563 Pager
Kim, Young I.

AACRA Backflow Assembly Testing & Service
PMB A-11 621 SR 9 NE
Lake Stevens, W A 98258
425-334-4507/425-330-5802 Cell Phone/425-438-5316 Pager
Young, Lewis

Backflow Testing & Service
PO Box 42
Lake Stevens, WA 98258
425-334-3350
Wahlman, Tom

Grassworks
PO Box 1 022
Lake Stevens, WA 98258
425-335-3819/425-280-5456 Cell Phone
Wade, Brian

Bentley, Raymond
30 139th Avenue SE
Snohomish, W A 98290
360-568-7801
Bentley, Raymond

Haagen's H2O Designs, Inc.
PO Box 1183
8509 168th Street SE
Snohomish, WA 98290
360-483-2684
Haagen, David

Sno King Mechanical
3323 193rd Place SE
Bothell, WA 98012
425- 483-9026
Tackett, Terry

Aqua Tech Services
15508 Country Club Drive A-37
Mill Creek, W A 98012
425-379-8429
Nardone, Vince

Living Designs
10418 NE 143rd Street
Bothell, W A 98011
425-821-5094
Pelroy, Steve

Backflow Assembly Testing Service
6703 227th SW
Mountlake Terrace, WA 98043
425-774-3473
Chris Schultz

Day & Nite Plumbing
PO Box 1021
Lynnwood, WA 98046
425-775-6464
Davis, Bruce
More, Hugh

Bellingham Lock & Safe Inc.
1619 N State Street
Bellingham, W A 98225
360-734-4940
Visser, Mike
Wise, Billy
Pauley, Jess

AAA Fire & Safety Inc.
3013 3rd Avenue North
Seattle, WA 98109
1-800-223-3473
Burroughs, Will

All Temp Mechanical, Inc.
527 NW 196th Place
Seattle, WA 98177
206-281-7067
Coleman, Ron

Backflow Testing Services
11504 Sandpoint Way NE
Seattle, WA 98125
206-361 -1577
Flickinger, Charles

Oarvin Electric Inc.
1703 N E 192nd Street
Seattle, WA 98155
206-364-9323
Avis, Darvin

McKinstry Services
5005 3rd Avenue S
Seattle, WA 98124
Everett: 425-339-1399/800-669-6223
Seattle: 206- 762-5900
Bellevue: 425-454-8125
Colts, Aaron
Oameron, Merle
Garnett, Nils
Peters, James
Koch, Karl
Schnabel, Curtis

NW Mechanical
1100 54th NW
Seattle, WA 98177
206-782-7520
Roach, Baxter

University Mechanical Contractors, Inc.
PO Box 77033
Seattle, W A 98133
206-364-9900
Angus, Clifford
Willis, Edward

Hornbeak Irrigation, Inc.
857 136th NE
Bellevue, WA 98005
425-641-0734
Gutierrez, Alvaro
Justesen, Robbie
Justesen, Roger

US Filter
5823 238th SE
Woodinville, WA 98072
800-422-3081
Kolbo, Ron

Supreme Landscape Services
PO Box 1141
Woodinville, WA 98072
425-483-6222
Smith, Dave

Aqua Containment Company, Inc.
445 SW Forest Drive
Issaquah, WA 98027
425-392-1523
Nelson, Gerald
Nelson, Patricia

Auburn Mechanical
2623 West Valley Hwy
Auburn, WA 98071
253-838-9780
Karr, Christopher
Graham, Kenneth

The Plumbing Joint
351 Union Avenue NE
Renton, WA 98059
425-228-3204
Bushong, Aaron
Kasper, James
Palmer, Dwayne
Palmer, Randy
Rogers, James

Grinnell Fire Protection
1215 Central Avenue S, Suite 128
Kent, W A 98032
253-859-5066
Carolan, Thomas
Skipworth, Skip

Backflows Only
PO Box 846
Kirkland, WA 98083
206-224-4959
Backflows1 @aol.com
Butner, Rick

Water Specialties Company, Inc.
12853 NE 83rd Street
Kirkland, WA 98033
425-827 -4964/800-828-1962
Unger, Dick

Keeney, George
6115 NE 195th Place
Kenmore, WA 98028
206-487 -2180
Keeney, George

Appendix I
Backflow Incident Response Procedures

Appendix I

Backflow Incident Response Procedures

1. Purpose

The purpose of this procedure is to guide the CCS, other Public Works Department personnel, and City management in responding to potential or actual backflow incidents.

2. Procedures

The City has established backflow incident response procedures that address a wide variety of backflow situations including:

- Contaminated Water
- Microbiological Contamination
- Chemical Contamination
- Physical/Mechanical/Operational Failures

2.1 Overview

A backflow incident is often discovered through investigation of a taste, color, or odor inquiry received from a customer water quality complaint. If it is determined that a cross-connection exists and a backflow incident has occurred, then action must be taken to assess the nature and degree of any resulting water system contamination, to prevent further contamination, and to restore water quality in the City's water distribution system and in the customer's water system. This procedure applies to any City employee responding to a water quality complaint, which may be related to a cross-connection. The employee must notify the CCP Administrator or another City cross-connection control specialist (CCS) whenever a cross-connection is suspected.

The CCP Administrator or CCS investigates the inquiry, and determines what response is appropriate. The field investigation must be accomplished by qualified City personnel. If necessary, a team made up of the CCS and a City Plumbing Inspector will conduct the investigation. Other City employee with special water system knowledge and skills may also be involved. The Director of Public Works and Utility Maintenance Supervisor must also be informed and involved.

A broad range of actions will be associated with any Backflow incident ranging from simple isolation of a single property or building to broad issues of potential liability and public health impact. The Director of Public Works takes the lead in making decisions and taking actions related to public information and the involvement of outside agencies. The Director also makes decisions concerning corrective action alternatives that may be beyond the scope of normal Public Works Department expertise and/or experience.

City of Marysville management will notify the DOH, local administrative authority, and local health jurisdiction as soon as possible, but no later than the end of the next business day, when a backflow incident is known to have contaminated the public water system or occurred within the premises of a consumer served by the purveyor.

2.2 Incident Investigation Guidelines

Any backflow incident investigation and follow-up response must be tailored to the nature and degree of the incident. Thus, the following guidelines are somewhat general in nature and designed to help the CCS, supporting personnel, and City management in making initial assessments, organizing a detailed investigation, and planning and executing an appropriate response. The nature and circumstances

associated with a particular incident may eliminate the need for certain of these procedures, or it may change the order in which the suggested procedures occur.

The CCS assumes overall responsibility for conducting the backflow investigation. Depending on the nature, source, location, magnitude, and complexity of any associated water system contamination, the CCS requests assistance from support personnel for diagnosis and repair functions and from City management for public and agency notification functions.

The CCS contacts the customer, arranges to visit the property, interviews the customer, collects grab samples from appropriate locations, and forwards the samples for laboratory analysis. Minimum testing includes pH, free chlorine residual concentration, and bacteriological analysis. The pH and chlorine tests serve as indicators of potential problems, and the bacteriological analysis gives an indication of the integrity of the water supply system.

Based on the actual or suspected degree of hazard, the CCS considers the need for shutting of the water supply, either to the individual property or to one or more segments of the associated water distribution main. If a cross-connection is probable and has the potential to contaminate the system beyond the premises, immediately shut off the water supply line that is at risk. Inform management of your suspicions and actions. Notify the customer of your actions and of the investigation and reason for it. Also, if water is to be shut off, the proper County and State agencies must be alerted. If a cross- connection is confirmed, the Director of Public Works notifies the DOH and Snohomish Health District (SHD) within 48 hours.

If the CCS suspects the cross-connection still exists and the water is or may be contaminated, he/she advises the customer not to drink or use the water. If the customer complains of health problems, the CCS advises the customer to see a physician.

Any water samples should be collected by the CCS or by other trained Public Works Department personnel in accordance with the City's Water Quality Monitoring Program Procedures. The CCS should not ask the customer to collect grab samples.

Short-range incident responses include determining the cause of the problem, eliminating the source of the problem, minimizing the effects of the backflow through containment, and public notification. The DOH and/or the Snohomish Health District may be called upon to help in identifying the source of the problem. The media, as well as police and fire personnel, may be contacted to assist with notifying water customers of the problem.

Medium-range incident responses involve restoring water quality. Restoring potable water to affected customers may take several days to several months to accomplish. The Snohomish Health District or the DOH may be requested to help in providing water. Simply flushing sections of the water main in the area may restore potable water quality. However, if the contamination is severe and post-flushing grab samples continue to exhibit unacceptable water quality standards, one or more sections of the water main may have to be replaced.

Long-range incident response includes a review of how the emergency was handled so that future emergency responses can be improved. It is important to assess what did and didn't work, how procedures can be modified, the performance and cooperation afforded by the agencies involved, and whether re-education and/or better lines of communication are needed.

2.3 Incident Investigation Procedures

The investigating team will take steps appropriate to the specific incident. These steps may include any or all of the following:

- Locate the source of contamination.
- Determine the degree of hazard.
- Determine whether the distribution system been contaminated.
- Conduct premises and distribution system sampling.
- Identify any water chemistry changes (e.g., increase or decrease in chlorine demand).
- Note any abnormal distribution system operating conditions.
- Review appropriate premises and distribution system diagrams.
- Isolate the premises whenever appropriate.
- Do not restore water service until the customer has corrected the problem and demonstrated, via an on-site inspection, that adequate backflow prevention has been implemented.

If the CCS suspects or determines that a portion of the water distribution system has become contaminated, the following procedures will be followed:

- Shut off the water supply to the affected portion(s) of the distribution system.
- Provide personal notification to every customer who is potentially affected by the problem.
- Arrange for a central watering source (bottled water, water truck, etc.).
- Notify customers if it is determined necessary to boil water for drinking and cooking.
- Test pH and take a grab sample at the meter to identify the nature of the contamination.
- Notify the Fire District of the problem and the potential for aid calls.
- Call the Snohomish Health District, the DOH, and possibly Poison Control if medical attention may be required.
- Contact the news media if necessary.
- Flush main distribution lines and all water lines on the customer's premises.
- After flushing, take follow-up grab samples from appropriate taps on the distribution main and on the customer’s property and submit them for laboratory analysis to confirm that water quality has been restored.
- Re-flush the mainline and customer lines if needed.
- After corrective actions are completed and the water system is considered safe, contact every customer who was involved and provide an explanation of the process and the results.
- If the news media was contacted about the initial problem, contact them again with follow-up information.
- Notify the local administrative authority, and the Snohomish Health District as soon as possible, but no later than the end of the next business day when a backflow incident is known to have contaminated the public water system; or occurred within the premises of a consumer.
- Document all facets of the incident (field actions, sample data, discussions, participants, etc.) and record the data in a Backflow Incident Report Form. An example report form is included at the end of this appendix.

The CCP Administrator is responsible for documenting the incident by completing a Backflow Incident Report Form. An example form is included at the end of this appendix. The initial water quality complaint investigation may provide significant background information related to a backflow incident. However, the nature and focus of a backflow incident investigation may require additional information that the City did not obtain during the water quality complaint investigation. During the course of the backflow incident investigation, the CCS should obtain customer contact information and collect or observe other related information including:

- Property address
- Customer’s name
- Customer’s daytime and evening telephone numbers
- Customer’s fax number and/or e-mail address
- Approximate age of any buildings and plumbing systems on the property
- A description of any recent plumbing system repairs, replacements, or modifications

- For residential, commercial, and institutional facilities, attempt to obtain copies of plans for the building(s) and associated plumbing system(s).
- For industrial facilities, attempt to obtain copies of industrial process diagrams as well as plans for the building(s) and associated plumbing system(s).
- Identity of the person(s) who first discovered the problem
- Conduct interviews as necessary to obtain a full problem description.
- Are (or were) both the hot- and cold-water taps affected by the problem?
- Has the customer (or nearby water system customers) experienced any health issues?
- Have adjacent water system customers experienced the same problem?
- Does the magnitude of the problem seem to be increasing or decreasing?
- Does the problem seem to be continuous or intermittent?
- Has the customer contacted other city, county, or state agencies about the problem?
- Can the customer contribute any knowledge or opinions concerning the source of the problem?
- What actions has the customer taken in an effort to control, isolate, or remedy the problem?

Supplemental information pertinent to documenting a backflow incident investigation might include:

- What were the initial indications that a problem existed?
- What immediate actions were taken?
- What subsequent actions were taken?
- How was the problem isolated?
- What contaminants were involved?
- What was the source of the contamination?
- What were the effects of the contaminant?
- What was the distribution of contaminants?
- What should have been done differently?

Washington State Department of Health
Division of Environmental Health
Office of Drinking Water

Cross-Connection Control Program

BACKFLOW INCIDENT REPORT FORM

Note: *use this form to comply with WAC 246-290-490(8)(g).*

Part 1: Public Water System (PWS) Information

PWS ID:	PWS Name:	County:

Part 2: Backflow Incident Information

A. Incident Identification

Incident date:	Time of incident:	Incident ID (DOH use):

B. Information on Premises where Backflow Originated

Name of premises:		
Premises physical address:		
City: ,WA	Zip:	
Premises type: non-residential ☐ residential ☐		
Premises category/description (Table 9 category*, if applicable):		
Most recent hazard evaluation prior to incident (mm/dd/yyyy): None ☐		
PWS's assessed hazard level:	*Premises isolation* required by PWS? Yes ☐ No ☐	
Type of backflow preventer required by PWS:	PWS relies on *in-premises protection*? Yes ☐ No ☐	
Other hazard evaluation information:		

*See WAC 246-290-490(4)(b)(i).

C. Method of Discovery of Backflow

How the backflow was discovered (check all that apply):	Direct observation ……. ☐ Meter running backwards …….. ☐ Water use decrease …… ☐ Disinfectant residual monitoring ... ☐ Water quality monitoring …….. ☐	Water quality complaint ……..... ☐ Illness/injury complaint ……..... ☐ Result of Investigation ……... ☐ Other (Describe): ☐
Incident reported to the public water system by:	PWS Personnel ☐ Premises Owner/Occupant ☐ Other PWS Customer ☐ Backflow Assembly Tester ☐ Other (Specify):	

D. Contaminant Information

Contaminant type (check all that apply):	Microbiological ☐ Chemical ☐ Physical ☐
Describe contaminant (for example, the organism name, chemical, etc.). Please attach lab analysis or MSDS, if available.	

E. Extent and Effects of Contamination

Estimated extent of contamination:	Contained within premises ☐ Entered PWS distribution system ☐
Estimated number of connections affected:	Residential Non-residential
Estimated population affected or at risk:	Residential Non-residential
Number water quality complaints:	Describe water quality complaints:
Number illnesses reported:	Describe illnesses/irritation (specific illnesses, if known):
Number physical injuries(e.g. burns) or irritation(e.g. rashes) cases reported:	

Part 3: Cross-Connection Control Information at Backflow Site

A. Source of Contaminant

Source of contaminant or fixture type (check all that apply):	Air conditioner/heat exchanger …..… ☐ Auxiliary water supply ……... ☐ Beverage machine ……..…… ☐ Boiler, hot water system ……..…..…… ☐ Chemical injector/aspirator ……..... ☐ Fire protection system ……..….. ☐ Irrigation system (PWS supplied) ….. ☐	Industrial/commercial process water/fluid……. ☐ Medical/dental fixture ……..…… ☐ Reclaimed water system……..….. ☐ Swimming pools, spa ….……..……. ☐ Wastewater (sewage) system …..….. ☐ Other (specify): ……. ☐ ……..

B. Distribution System Pressure Conditions in the Vicinity of the Backflow Incident

Type of backflow:	Backsiphonage ☐ Backpressure ☐	**Typical distribution system pressure in vicinity of incident** (if range, enter lower end of range)**:** psi
Main/pressure status at time of incident (check all that apply):	Normal ……..... ☐ Main break ……..... ☐ Fire fighting …… ☐ Other high usage ……. ☐ Power outage …… ☐	Source/plant outage …… ☐ Scheduled water shutoff by PWS …... ☐ Unscheduled/emergency shutoff …… ☐ Unknown ...……..... ☐ Other (specify) ☐

Describe causes and circumstances leading to backflow:

C. Backflow Preventer Information/Installation/Approval Status at Site of Backflow

Complete the tables in C and D for the ***premises isolation*** preventer for either of the following situations:

- If a premises isolation backflow preventer is installed ***and*** the contaminant entered the PWS distribution system.
- If the premises isolation assembly is the only backflow preventer at the site.

In all other cases, complete tables in C and D for the ***in-premises*** backflow preventer installed at the fixture. If more than one backflow preventer was involved in the backflow incident, copy tables C and D and complete them for the additional preventer(s).

If no backflow preventer was installed at the time the incident occurred, check this box ☐ and go directly to Part 4. Don't fill out the tables below (in C and D).

Backflow preventer information:	Type installed: Installed for: Make: Model: Size: Serial number: Date installed:	
Installation status (check all that apply):	Properly installed/plumbed ☐ Improperly protected bypass present ☐ Improperly installed/plumbed ☐ If so, explain:	
Commensurate with assessed degree of hazard?	Yes ☐ No ☐	If not, explain:
DOH/USC-approved at time of backflow incident?	Yes ☐ No ☐	If not, approved when installed? Yes ☐ No ☐

D. Backflow Preventer Inspection/Testing Information at Site of Backflow

Most recent inspection/test information *prior* to backflow incident. Attach test report(s), if available.	No test report on record …..... ☐ Date tested/inspected: Passed test/inspection *without* repairs …… ☐ Failed initial test/inspection, passed *after* repair …… ☐ Failed test/inspection, no repairs made …….. ☐	
Inspection/test information *after* backflow incident [per WAC 246-290-490(7)(b)]. Attach test report.	Not tested/inspected …..... ☐ Date tested/inspected: Passed test/inspection *without* repairs …… ☐ Failed initial test/inspection, passed *after* repair……. ☐ Failed test/inspection, no repairs made……... ☐	
Preventer failure information , if applicable (check all that apply):	Fouled check ……. ☐ Debris …… ☐ Weather-related damage …... ☐	Damaged seat …. ☐ Other: ☐
If preventer failed inspection/test, did failure allow backflow?	Yes ☐ No ☐ If yes, explain:	

Part 4: Corrective Action/Notifications

Action *taken* by PWS to restore water quality (check all that apply):	None …… ☐ Flushed/cleaned mains …… ☐ Flushed/cleaned plumbing… ☐ Disinfected mains …… ☐ Disinfected plumbing ……... ☐	Other treatment (describe): ☐ Replaced mains …… ☐ Replaced plumbing …….. ☐ Other: ☐
Action *ordered* by PWS to correct cross-connection (check all that apply):	None …….…… ☐ Eliminate cross-connection... ☐ Remove by-pass ……... ☐ Install **new** preventer … ☐ For *premises isolation* ☐ For *fixture protection* ☐	Change **existing** preventer ☐ Repair/replumb …..…… ☐ Reinstall correctly …..... ☐ Replace with same type ☐ Upgrade type .....……. ☐ Other: ☐
Action ordered accomplished?	Yes ☐ Date: No ☐	If no, explain:
Agency notifications per WAC 246-290-490(8)(f) (check all that apply):	DOH ☐ Local Health Agency ☐ Local Adm. Authority ☐ Issued by end of next business day:	
Notifications of consumers in area of incident (check all that apply):	Population at risk ☐ Public notification (PN per DOH regs.) ☐ Boil Water Advisory ☐ Other (describe):	
Other enforcement/corrective actions (describe):		

Part 5: Cost of Backflow Incident (optional)

Item	PWS Personnel Hours Expended	Cost to PWS ($)	Cost to Premises Owner ($)
Investigation			
Restoration of water quality			
Correction of cross-connection situation			
Litigation and/or settlement			
Other not included in above			

Part 6: Further Information/Documentation

Additional information about this incident such as pictures, sketches, newspaper/journal articles, water quality analyses, epidemiological reports, etc. would be helpful. Information may be in electronic form or hard copy.

Part 7: Form Completion Information

Note: *Form should be completed by a person currently certified as a Cross-Connection Control Specialist.*

I certify that the information provided in this Backflow Incident Report is complete and accurate to the best of my knowledge.		
CCC Program Mgr. Name (print)**:**		Title:
Signature:	CCS Cert. Number:	Date:
Phone:	E-mail:	
I have reviewed this report and certify that the information is complete and accurate to the best of my knowledge.		
PWS Mgr./Representative Name (Print):		Title:
Signature:	Op. Cert. Number:	Date:

Please send completed backflow incident form:

By mail to:

Washington State Department of Health
Office of Drinking Water – CCC Program Manager
P O Box 47822
Olympia, WA 98504-7822

By email to: terri.notestine@doh.wa.gov or cccprogram@doh.wa.gov

Please send questions, comments, or suggestions about this form to us at the address above or e-mail them to cccprogram@doh.wa.gov

If you need this publication in an alternate format, call (800) 525-0127. For TTY/TDD, call (800) 833-6388.

Appendix J
Customer Information Kit

Appendix J

Customer Information Kit

Marysville has defined and implements a cross-connection program to protect the public water supply and your health. A cross-connection is any actual or potential physical connection that could allow contaminated or used water or other substances to backflow into the City's water distribution system. Backflow can occur from backsiphonage, or backpressure. Backsiphonage is caused by negative pressure in the supply piping. Some common causes are high velocity in pipelines (Fire District turning on hydrants), line repair, or a break that is lower than your service connection. Backpressure is caused when the potable water supply piping is connected to a system or fixture, which exceeds the operating pressure of the supply piping. Some common causes could be from: a booster pump, potable water connections to boilers or other thermal expansion systems, interconnections with another system operated at a higher pressure, or from piping elevated 30 feet above the finished grade.

There are two types of isolation practices. The first is premise isolation, in which the customers entire system is separated from the City's system by means of a backflow prevention assembly installed at the service connection, immediately downstream from the meter. This type of isolation does not offer protection within the customer's water system. The second means of isolation is internal. This is the practice of installing backflow prevention assemblies to protect one item or area within a customer's property or facility from contaminating water piping in another part of the property or facility.

The City's cross-connection control program utilizes premise protection. This requires that approved air gaps or approved backflow prevention assemblies be installed on the customer side of the property lines, at the end of water meter connections or at the end of the service connection for connections without meters.

The State of Washington requires public water systems to develop and implement an active Cross-Connection Program (CCP). Marysville's CCP focuses on: inspecting homes and businesses to identify cross-connection possibilities; eliminating dangerous cross connections; and requiring that customers install backflow prevention assemblies to isolate cross-connections that can not be eliminated. The CCP also requires that backflow prevention assemblies be tested annually by a State Certified Backflow Assembly Tester (BAT), and that those findings be submitted to the City for review and approval.

The City has developed materials to assist you in determining the level of backflow protection, if any, required for isolating your water system. The following documents are enclosed for your information:

- A form letter explaining water system customer responsibilities under WAC 246-290-490
- A copy of the Marysville cross-connection ordinance
- A list of state-certified Backflow Assembly Testers who work in the Marysville area

Approved Backflow Prevention Assemblies

Backflow prevention assemblies installed for cross-connection control must be acceptable to the DOH. As referenced in WAC 246-290-490(5)(a), DOH has published and periodically updates a list of approved assemblies. For customers and purveyors located in northwestern Washington, this list as well as general technical assistance may be obtained by contacting the DOH:

Washington State Department of Health
Division of Drinking Water
Northwest Drinking Water Operations
20435 72nd Ave S, Suite 200, K17-12
Kent WA 98032-2358
Phone (253) 395-6750
Fax (253) 395-6760
TTY Relay Service (800)-833-6388

The DOH publishes the list of approved backflow prevention assemblies once a year with interim updates issued in the form of addenda.

Additional Information

Other materials are available related to the City's CCP. If you have questions about the information presented here or wish to obtain additional information, please contact the City's CCP Administrator by visiting the Marysville Public Works Department located at 80 Columbia Avenue or by calling (360) 651-5100.

Appendix K
Cross-Connection Program
Definitions, Abbreviations, and Acronyms

Appendix K

Cross-Connection Program Definitions, Abbreviations, and Acronyms

This appendix defines terms, abbreviations, and acronyms relating to cross-connection control. Many of the items are extracted from WAC 246-290-010, *Definitions,* which includes official DOH definitions pertinent to Group A public water systems. Other items presented here are specific to this CCP.

“Approved air gap" means a physical separation between the free-flowing end of a potable water supply pipeline and the overflow rim of an open or non-pressurized receiving vessel. To be an air gap approved by the DOH, the separation must be at least:

- Twice the diameter of the supply piping measured vertically from the overflow rim of the receiving vessel, and in no case be less than one inch, when unaffected by vertical surfaces (sidewalls); and:
- Three times the diameter of the supply piping, if the horizontal distance between the supply pipe and a vertical surface (sidewall) is less than or equal to three times the diameter of the supply pipe, or if the horizontal distance between the supply pipe and intersecting vertical surfaces (sidewalls) is less than or equal to four times the diameter of the supply pipe and in no case less than one and one-half inches.

"Approved atmospheric vacuum breaker" means an AVB of make, model, and size that is approved by DOH. AVBs that appear on the current approved backflow prevention assemblies list developed by the University of Southern California Foundation for Cross-Connection Control and Hydraulic Research or that are listed or approved by other nationally recognized testing agencies (such as IAPMO, ANSI, or UL) acceptable to the local administrative authority are considered approved by the DOH. (Note: An AVB is a backflow prevention assembly that is operated by atmospheric pressure in combination with the force of gravity. An AVB is designed to work in a vertical plane only. The moving part consists of a valve that must be carefully sized to slide in a guided channel and effectively shut off any reverse flow of water when a negative pressure exists in the supply system. AVBs are designed to protect against back-siphonage only.)

"Approved backflow prevention assembly" means an RPBA, RPDA, DCVA, DCDA, PVBA, or SVBA of make, model, and size that is approved by DOH. Assemblies that appear on the current approved backflow prevention assemblies list developed by the University of Southern California Foundation for Cross-Connection Control and Hydraulic Research or other entity acceptable to the DOH are considered approved by DOH.

"Auxiliary water supply" means any water supply on or available to the premises other than water supplied by the City.

"Backflow" means the undesirable reversal of flow of water or other substances through a cross- connection into the public water system or consumer's potable water system.

"Backflow Assembly Tester" means a person holding a valid BAT certificate issued in accordance with WAC 246-292. (i.e., a person who is currently certified by the DOH as trained and competent to inspect and test approved backflow prevention assemblies).

"Contaminant" means a substance present in drinking water that may adversely affect the health of the consumer or the aesthetic qualities of the water.

"Backpressure" means a pressure (caused by a pump, elevated tank or piping, boiler, or other means) on the consumer's side of the service connection that is greater than the pressure provided by the public water system and which may cause backflow.

"Back-siphonage" means backflow due to a reduction in system pressure in the purveyor's distribution system and/or consumer's water system.

"Building Inspector" means any individual authorized by the Local Administrative Authority to review plans and inspect installations associated with consumer's water systems. Qualifications for this position include familiarity with the Uniform Plumbing Code and state certification as a CCS. For consumer properties located within the City of Marysville, the inspector would be a City employee authorized by the Director of Public Works. For consumer properties located outside the City Limits, the inspector would be an employee of the Snohomish County Building Division or the City of Arlington.

"Check valve" means any example of a variety of valves that are designed to permit flow in one direction only. The variety includes slanting disc checks, silent checks (wafer or globe), automatic control valves, rubber flapper checks, double-disc swing checks, swing checks (internally or externally weighted), and spring-loaded checks. A check valve incorporated in an approved backflow prevention assembly must be an approved check valve that is drip tight in the normal direction of flow when the inlet pressure is at least one psig.

"City" means the City of Marysville".

"Combination fire protection system" means a fire sprinkler system that:

- Is supplied only by the purveyor's water;
- Does not have a fire department pumper connection; and,
- Is constructed of approved potable water piping and materials that serve both the fire sprinkler system and the consumer's potable water system.

"Consumer" means any person, organization, firm, or corporation receiving potable water from a public water system through a legal service connection from either the meter, or the point where the service line connects with the distribution system if no meter is present. (Note: This CCP document uses the terms consumer and customer interchangeably.)

"Consumer's water system," means any potable and/or industrial water system that begins at the point of delivery from the public water system and is located on the consumer's premises. The consumer's water system includes all auxiliary sources of supply, storage, treatment, and distribution facilities, piping, plumbing, and fixtures under the control of the consumer.

"Contaminant" means a substance present in drinking water that may adversely affect the health of the consumer or the aesthetic qualities of the water.

"Cross-connection" means any actual or potential physical connection between a public water system or the consumer's water system and any source of non-potable liquid, solid, or gas that could contaminate the potable water supply by backflow.

"Cross-connection control program" means the administrative and technical procedures the purveyor implements to protect the public water system from contamination via cross- connections as required in W AC 246-290-490.

"Cross-connection control specialist" means a person holding a valid CCS certificate issued in accordance with W AC 246-292.

"Cross-connection control summary report" means the annual report that describes the status of the purveyor's cross-connection control program.

"Customer" means any person, organization, firm, or corporation receiving potable water from a public water system through a legal service connection from either the meter, or the point where the service line connects with the distribution system if no meter is present. (Note: This CCP document uses the terms customer and consumer interchangeably.)

"Degree of hazard" means the relative actual or potential risk to public health and to the City's potable water system posed by actual or potential cross-connections to the public water system as determined by the CCS based on evaluations and/or site inspections. Two categories of hazard include:

- Health cross-connection hazard: Any condition, component, or practice in the water supply system and its operation that could create, or in the judgment of the DOH, may create a danger to the health and well being of the water customer.
- System cross-connection hazard: An actual or potential threat to the physical properties of, or to the potability of water in the City's water system or the customer's water system, which would constitute a nuisance or be aesthetically objectionable or could cause damage to the system or its appurtenances, but would not be dangerous to health.

"Design and construction standards" means DOH design guidance and other peer-reviewed documents generally accepted by the engineering profession as containing fundamental criteria for design and construction of water facility projects. Design and construction standards are comprised of performance and sizing criteria and reference general construction materials and methods.

"Direct service connection" means a service hookup to a property that is contiguous to a water distribution main and where additional distribution mains or extensions are not needed to provide service.

"Disinfection" means the use of chlorine or other DOH-approved agent or process for killing or inactivating microbiological organisms, including pathogenic and indicator organisms.

"Distribution system" means all piping components of a public water system that serve to convey water from transmission mains linked to source, storage and treatment facilities to the consumer excluding individual services.

"Double Check Detector Assembly (DCDA)" means an approved backflow prevention assembly composed of two (2) single, independently acting, check valves, including tightly closing shut-off valves located at each end of the assembly and suitable test cocks for testing the water tightness of each check valve. These assemblies must include a factory-installed bypass designed to monitor low flows on low hazard fire protection systems. These bypasses are used to detect unauthorized use of water allocated for fire protection and to detect leaks in the fire system. DCDAs protect the water system from both back-siphonage and backpressure. They are not suitable for protecting the water system from health threatening substances.

"Double Check Valve Assembly (DCVA)" means an approved backflow prevention assembly composed of two (2) single, independently acting check valves loaded to the closed position by springs or weights, supplemented by tightly closing shutoff valves located at each end of the assembly and by properly located test cocks suitable for testing the water tightness of each check valve.

"Emergency" means an unforeseen event that causes damage or disrupts normal operations and requires immediate action to protect public health and safety.

"Flow-through fire protection system" means a fire sprinkler system that:

- is supplied only by the purveyor's water;
- does not have a fire department pumper connection;
- is constructed of approved potable water piping and materials to which sprinkler heads are attached; and
- terminates at a connection to a toilet or other plumbing fixture to prevent the water from becoming stagnant.

"Grab sample" means a water quality sample collected at a specific instant in time and analyzed as an individual sample.

"Graywater use" means that a customer's system utilizes the effluent from untreated household wastewater that has not come into contact with toilet or food processing waste. Graywater sources include water from bathtubs, showers, washbasins, clothes washers, but not kitchen sinks or dishwashers. All graywater systems must be considered high health hazards because of the potential for transmitting human pathogens.

"Health Hazard" means any condition, assembly, or operating practice in a water supply system that creates or may create a danger to the health and well being of a water system customer.

"Health officer" means the city, county, or state public Health Officers duly appointed by the City, by Snohomish County, or the DOH.

"High health cross-connection hazard" means a cross-connection that could impair the quality of potable water and create an actual public health hazard through poisoning or spread of disease by sewage, industrial fluids, or waste.

"Human consumption" means the use of water for drinking, bathing or showering, hand washing, food preparation, cooking, or oral hygiene.

"Industrial fluids" means fluids or solutions that may be chemically, biologically, or otherwise contaminated or polluted in a form or concentration that would constitute a health or plumbing hazard if introduced into a potable water supply. These substances may include but are not limited to all types of processed waters originating from the public water or auxiliary supply which may deteriorate in sanitary quality; chemicals in fluid form; plating acids and alkalis; circulated cooling waters that are chemically or biologically treated or stabilized with toxic substances; and contaminated natural waters such as from wells, springs, streams, or ponds.

"In-premises protection" means a method of protecting the health of consumers served by the consumer's potable water system, located within the property lines of the consumer's premises, by the installation of an approved air gap or approved backflow prevention assembly at the point of hazard, which is generally a plumbing fixture. In-premise protection requirements are specified by of the Uniform Plumbing Code and enforced by the Local Administrative Authority.

"Local administrative authority" means the local official, board, department, or agency authorized to administer and enforce the provisions of the Uniform Plumbing Code as adopted under RCW 19.27.

"Low health cross-connection hazard" means a cross-connection that could cause an impairment of the quality of potable water to a degree that does not create a hazard to the public health, but does adversely and unreasonably affect the aesthetic qualities of such potable waters for domestic use.

"Potable water" means water suitable for drinking by the public.

"Premises" means a piece of land or other property to which water is provided, including all structures and improvements located on it.

"Premises isolation" means a method of protecting a public water system by installation of approved air gaps or approved backflow prevention assemblies at or near the service connection or alternative location acceptable to the purveyor to isolate the consumer's water system from the purveyor's distribution system.

"Pressure Vacuum Breaker Assembly (PVBA)" means an approved backflow prevention assembly composed of a spring-loaded check valve, an independently operating air inlet valve, inlet and discharge shutoff valves, and properly installed test cocks. The air inlet valve is internally loaded to the open position, normally by means of a spring. This internal loading allows the assembly to be installed on the pressure side of a shutoff valve. These assemblies are designed to protect against back-siphonage only.

"Public water system" means any system providing water for human consumption or other domestic use through pipes or other constructed conveyances, excluding a system serving only one single-family residence and a system with four or fewer connections all of which serve residences on the same farm. Such term includes:

- Collection, treatment, storage, and/or distribution facilities under control of the purveyor and used primarily in connection with such system; and Collection or pretreatment storage facilities not under control of the purveyor, but primarily used in connection with such system.
- In the context of this CCP document, the public water system refers to the source, treatment, storage, transmission, and distribution facilities owned, operated, and maintained by the Marysville Public Works Department to furnish potable water to customers located in the City of Marysville, City of Arlington and in surrounding areas of unincorporated Snohomish County.

"Purveyor" means an agency, subdivision of the state, municipal corporation, firm, company, mutual or cooperative association, institution, partnership, or person or other entity owning or operating a public water system. Purveyor also means the authorized agents of such entities.

"Reclaimed water" means effluent derived in any part from sewage from a wastewater treatment system that has been adequately and reliably treated, so that as a result of that treatment, it is suitable for beneficial use or a controlled use that would not otherwise occur, and it is no longer considered wastewater. Reclaimed water is considered to pose a potential high health hazard.

"Reduced Pressure Backflow Assembly (RPBA)" means an approved backflow prevention assembly composed of a minimum of two (2) independently acting check valves, together with an automatically operated differential pressure relief valve located between the two check valves. During normal flow, the pressure between these two check valves must be less than the upstream (supply) pressure. In case of leakage of either check valve, the differential relief valve, by discharging to the atmosphere, operates to maintain not less than 2 psi between the supply pressure and the zone between the two check valves. The unit must include resilient seated shut- off valves located at each end of the assembly, and each assembly must be fitted with properly located test cocks.

"Reduced Pressure Detector Assembly (RPDA)" means an approved backflow prevention assembly composed of two approved reduced pressure backflow assemblies, installed in parallel, and equipped with a metered bypass line to detect small amounts of water leakage or use.

"Service connection" means a piping connection from the City's water system to the consumer's water system designed to provide potable water from the City's distribution main to a single-family residence or other residential or nonresidential premise, facility, or structure. The service connection ends at a customer's property line or, if a City meter is installed, at the customer's end of the meter. Service connections also include water connections from fire hydrants and all other temporary or emergency water service connections to the public potable water system.

"State board of health" means the board created by RCW 43.20.030.

"Stormwater reuse" means that a customer's system utilizes rainwater collected from roof drains, roads, and/or parking areas for lawn and irrigation purposes. All stormwater reuse systems must be considered high health hazard because of the potential for bacterial and/or chemical contamination.

"Unapproved auxiliary water supply" means a water supply (other than the purveyor's water supply) on or available to the consumer's premises that is either not approved for human consumption by the health agency having jurisdiction or is not otherwise acceptable to the purveyor.

"Uniform Plumbing Code" means the code adopted under RCW 19.27.031(4) and amended under WAC 51-46. This code establishes statewide minimum plumbing standards applicable within the property lines of the consumer's premises.

"Used water" means water that has left the control of the purveyor.

Abbreviations and Acronyms

AG	Air Gap
ANSI	American National Standards Institute
APWA	American Public Works Association
AVB	Atmospheric Vacuum Breaker
AWWA	American Water Works Association
BAT	Backflow Assembly Tester
CFR	Code of Federal Regulations
CCS	Cross-connection Control Specialist
DCDA	Double Check Detector Assembly
DCVA	Double Check Valve Assembly
HFVB	Hose Faucet Vacuum Breaker
IAPMO	International Association of Plumbing and Mechanical Officials
MPWD	Marysville Public Works Department
psi	pounds per square inch
psig	pounds per square inch gauge
PVBA	Pressure Vacuum Breaker Assembly
RCW	Revised Code of Washington
RPBA	reduced pressure backflow assembly
RPDA	reduced pressure detector assembly
SVBA	spill-resistant vacuum breaker assembly
UBC	Uniform Building Code
UL	Underwriters Laboratories, Inc.
UPC	Uniform Plumbing Code
WAC	Washington Administrative Code
WSDOH	Washington State Department of Health

APPENDIX I

Water System Construction Standards

CHAPTER 2

WATER DISTRIBUTION DESIGN AND CONSTRUCTION STANDARDS AND SPECIFICATIONS

November 1998
Revised June 2015

Prepared by :

City of Marysville
Public Works / Community Development

CHAPTER 2 - WATER DISTRIBUTION

			Page No.
2-000		Water	2-1
2-010		General	2-1
2-020		Design Standards	2-2
2-030		Connections to Existing Water Main	2-2
2-040		Service Interruption	2-3
2-050			
	A.	Water System Materials	2-3
	B.	Main Line	2-4
	C.	Dead End Line	2-4
	D.	Flexible Gasketed Joints - D.I.	2-4
	E.	Fittings	2-5
	F.	Polyethylene Encasement	2-5
	G.	Minimum Cover	2-5
	H.	Couplings	2-5
	I.	Adapters	2-6
	J.	Bolts in Piping	2-6
2-060		Hydrants	2-6
	A.	Requirements	2-6
	B.	Hydrant Leads	2-6
	C.	Installation	2-6
	D.	Hydrant Spacing and Guidelines	2-7
2-070		Valves	2-10
	A.	Gate Valves	2-11
	B.	Butterfly Valves	2-11
	C.	Valve Boxes	2-11
	D.	Operating Valve Nut Extensions	2-11
	E.	Valve Marker Post	2-12
	F.	Check Valves	2-12
	G.	Air & Vacuum Release Valves	2-12
2-080		Pressure Reducing Stations and Pressure Reducing Valves	2-12
2-090		Service Connections	2-14
2-100		Steel Casing	2-16
2-110		Galvanized Iron Pipe	2-17
2-120		Blowoff Assembly	2-17
2-130		Concrete Bedding & Blocking	2-17
2-140		Joint Restraint	2-18
2-150		Backflow Prevention	2-18
	1.	Reduced Pressure Backflow Assembly with Detector	
	2.	Double Check Valve Assembly	
	3.	Double Check Valve Assembly with Detector	
	4.	Backflow Device Resilient Seated Shut-off Valves	
2-151		Reduced Pressure Backflow Assembly with Detector	2-19
2-152		Double Check Valve Assembly	2-19
2-153		Double Check Valve Assembly with Detector	2-19
2-154		Backflow Device Resilient Seated Shut-off Valves	2-19
2-160		Existing Utilities	2-20

2-170	Water Main/Sanitary Sewer Crossings	2-20
2-180	Staking	2-21
2-190	Trench Excavation	2-21
2-200	Trench Shoring	2-23
2-210	Dewatering of Trench	2-23
2-220	Installation	2-24
2-230	Laying Pipe on Curves	2-25
2-240	Trench Backfill	2-27
2-241	Recycled Concrete	2-28
2-242	Controlled Density Fill	2-28
2-250	Compaction of Backfill	2-29
2-260	Temporary Street Patching	2-29
2-270	Trench Pavement Restoration	2-29
2-280	Hydrostatic Pressure Tests	2-31
2-290	Sterilization and Flushing of Water Mains	2-32
2-291	Chlorine Dosage	2-33

General Notes for Construction Plans	RN 2-1
Approved Materials List	RN 2-3

CITY OF MARYSVILLE

DESIGN AND CONSTRUCTION STANDARDS
AND
SPECIFICATIONS

CHAPTER 2

WATER DISTRIBUTION

2-000 Water

2-010 General Any extension of the City of Marysville Water System must be approved by the Engineering Department. All extensions must conform to Department of Health guidelines, the North Snohomish County Coordinated Water System Plan, City of Marysville Water System Plan, and Fire District No. 12 requirements.

All construction of water mains and related appurtenances shall conform to these Standards, applicable American Water Works Association (AWWA) Specifications and the WSDOT Standard Specifications. The general requirements of AWWA and the WSDOT Standard Specifications shall apply unless they are inconsistent with any of the provisions of this particular section. Should inconsistencies occur, these Standards shall have precedence.

In designing and planning for any development, it is the developer's responsibility to see that adequate water for both domestic use and fire protection is attainable. The developer must show, in all proposed plans, how water will be supplied and whether adequate water pressure will be attained in case of fire.

The fire flow requirements are established by the International Building Code. The Public Works Department will evaluate whether the existing system will meet that requirement or if system improvements are required. Due to seasonal and other variables associated with flow tests, these flow tests will not be used to measure the system's ability to meet the fire flow requirements.

An analysis performed by the City of the system may be required if it appears that the system might be inadequate. The developer shall be assessed any and all applicable fees for the analysis.

Anyone who wishes to extend or connect to the City's water system should contact Engineering Services for a water connection fee estimate. This fee estimate is an estimate of the costs due the City for a waterline connection.

Prior to the activation of any water meters, all Public Works improvements must be completed and approved including granting of right-of-way or easements, and all applicable fees must be paid.

Issuance of building permits for new construction shall not occur until final approval is given. A construction bond, in accordance with Section 14.03.430 Marysville Municipal Code (MMC), will be required for the remaining public works improvements. Certificate of occupancy will not be issued until final approval is given for all improvements.

2-020 Design Standards The design of any water extension/connection shall conform to City Standards and any applicable standards as set forth herein and in Title 14 of the City of Marysville Municipal Code.

Water main extensions will be required when the property does not front on a water main or when the existing water main is not adequate for the increased use proposed.

The layout of extensions shall provide for future continuation and/or "looping" of the existing system as determined by the City. Utility mains shall be extended to and through the extremes of the property being developed. Main extensions shall be extended as required in Section 14.03 MMC .

The minimum size shall be 8 inches in diameter unless otherwise approved by the Public Works Director or designee. Water main extensions and/or new fire hydrant installations may also be required per the requirements of the City Fire Marshal or City Engineer.

The General Notes at the end of this chapter shall be included on any plans dealing with water system design.

2-030 Connection to Existing Water Main The developer's engineer shall be responsible for determining the scope of work for connection to existing water mains.

It shall be the Contractor's responsibility to field verify the location and depth of the existing main and the fittings required to make connections to the existing mains. Connection of a

new main to existing shall only be done through a private double check valve assembly until testing and purity.

The connection to a water main in use shall be made by the Developer and only at such time as the City Engineer or Utilities Superintendent permits. Work required to make the connection shall be continuous, and done in a timely manner with a sufficient number of men employed to insure the least interference with the City's water system. The Developer shall notify the City Inspector and the Utilities Superintendent at least forty-eight (48) hours prior to the scheduled time of the connection. The Marysville Water Department shall open or close all valves for construction, filling, testing, and flushing water mains and submit the bacteriological water sample. Existing valves, fittings, and other items removed to install the new main shall be salvaged by the Developer and delivered to the City's storage yard.

Ends of abandoned water main shall be plugged by filling with Class 3000 or Commercial Concrete for a minimum longitudinal length of twelve (12) inches.

2-040 Service Interruption The Contractor shall give the City a minimum of 48 hours notice of any planned connection to an existing pipeline. This includes all cut-ins and live taps. Notice is required so any disruptions to existing services can be scheduled. The City will notify customers involved or affected of the water service interruption. The Contractor shall make every effort to schedule water main construction with minimum interruption of water service. In certain situations, the City may dictate scheduling of water main shutdowns so as not to impose unnecessary shutdowns during specific periods to existing customers.

2-050 A. Water System Materials All materials shall be new and undamaged. The same manufacturer of each item shall be used throughout the work.

Where reference is made to other specifications, it shall be the latest revision at the time of construction, except as noted on the plans or herein.

All materials not specifically referenced shall comply with applicable sections of ANSI, ASTM, AWWA, or the WSDOT Standard Specifications.

Approved manufacturers and model numbers of various materials are listed in Approved Materials List of this chapter. When specific manufacturers or models are listed, no substitutions will be allowed without prior approval by the City Engineer.

B. Main Line Water mains shall be sized to provide adequate domestic and fire flow demands at the required residual pressure. Fire flow requirements will be determined by the Fire District; however, the quantity of water required will in no case be less than 20 psi residual pressure under fire flow conditions..

The minimum water main size shall be 8 inches diameter as long as fire flow requirements can be met. Larger size mains are required in specific areas outlined in the Comprehensive Water System Plan. Nothing shall preclude the City from requiring the installation of a larger sized main in areas not addressed in the Comprehensive Water System Plan if the City determines a larger size is needed to meet fire protection requirements for future service.

C. Dead End Line No dead end line less than 8 inch in diameter shall be longer than 200 lineal feet. Fire protection must be attainable for all lots from main line hydrants and it is apparent that the main will not be extended at any time in the future.

D. All pipe for water mains shall have flexible gasketed joints and shall comply with the following:

Ductile Iron Pipe:

Ductile iron pipe shall conform to ANSI Specification A21.51, 1976, AWWA C151-76, or the latest revision thereof and shall be of the thickness Class 52, unless otherwise specified by the City Engineer. The pipe shall be furnished with rubber gasketed push-on type joints except where flanged joints are specifically required by the City Engineer. Joint details shall be as specified in ANSI A21.11. Pipe with push-on fitting joints shall be suitable for use with mechanical joint fittings. The pipes shall be coated as specified in ANSI A21.51 and be furnished with cement mortar lining as specified in ANSI A21.4.

The Contractor shall furnish certification from the manufacturer of the pipe and gasket being supplied that the inspection of all the specified tests have been made and the results thereof comply with the requirements of the above-referenced standards.

E. All fittings for ductile iron pipe shall be ductile iron compact (short body) fittings conforming to AWWA C153 or Class 250 gray iron conforming to AWWA C110 and C111. All fittings shall be cement mortar lined conforming to AWWA C 104. Plain end fittings shall be ductile iron if mechanical joint retainer glands are installed on the plain ends. All fittings shall be connected by flanges or mechanical joints.

Flanges shall be Class 125, drilled in accordance with ANSI A21.10.

Gasket for flanged fittings shall be 1/16-inch thick "Cranite" or approved equal. Gaskets for push-on type and mechanical joints shall conform to ANSI A21.11.

Rubber gaskets for push-on joints or mechanical joint (M.J.) shall be in accordance with ANSI A21.11, AWWA C111.

Gasket material for flanges shall be neoprene, Buna N, chlorinated butyl, or cloth-inserted rubber.

The type of connections shall be specified on the plans as push-on joint, mechanical joint (M.J.), plain end (P.E.), flanged (FL), the threaded.

F. Polyethylene encasement when required shall be eight mil. tube or sheet stock and shall be furnished with all D.I. pipe unless otherwise specified. Materials shall comply with AWWA C105.

G. The minimum cover for all water mains from top of pipe to finish grade shall be 42 inches, and maximum depth of 60 inches, unless otherwise noted.

H. Couplings Flexible couplings and transition coupling cast components shall be ductile iron. Center rings and end rings shall be ductile iron in accordance with ASTM 536-80, Grade 65-45-12.

Gasket material shall be virgin SBR in accordance with ASTM D2000 3 BA715.

Bolts shall be high strength, low alloy steel trackhead bolts with national course rolled thread and heavy hex nuts. Steel shall meet AWWA/ANSI C11/A21.11 composition specifications.

I. Adapters All flange by mechanical joint (FL x MJ) adapters and asbestos cement by mechanical joint (AC x MJ or Hub x MJ) adapters shall be ductile iron.

J. Bolts in Piping Bolts shall be malleable iron Cor-ten, or stainless steel.

T-bolts shall be malleable iron Cor-ten in accordance with AWWA/ANSI C111/A21.11. Stainless steel bolts shall meet the requirements of ASTM A-307, Grade A. Shackle rods, nuts, and washers shall be hot-dipped galvanized in accordance with AASHTO M232 and/or coated thoroughly with coal-tar/asphaltic material.

Stainless steel nuts, bolts, and washers shall be type 304.

2-060 Hydrants

A. All buildings constructed in the City of Marysville or areas served water by the Marysville water system shall be served by fire hydrants. Such fire hydrants shall be served by the City or by other adequate means as approved by the City Engineer and Fire District 12.

B. The lead from the service main to the fire hydrant shall be ductile iron cement mortar lined Class 52 no less than 6 inches in diameter, with a maximum length of lead of 50 feet. (MCC 14.03.050). Hydrant leads in excess of 50' shall be 8-inch in diameter. Where leads require more than one length of pipe, field lock gaskets are required.

C. Fire hydrants shall be installed in accordance with Standard Plan No. 2-060-001, at locations as shown on the approved plans. They shall be painted with 2 coats of high gloss Caterpillar Yellow Preservative 43-616 type paint.

Hydrants shall be the "Traffic Model" type with approved breakaway features. All hydrants shall be brass to brass subseat, minimum valve opening of 5-1/4 inches "O" ring stem seal, 6 inch mechanical shoe connection, 1-1/4 inch pentagonal operating nut.

Fire hydrants shall have two, 2-1/2 inch outlets and one 4-1/2-inch pumper port outlet. All outport threads shall be National Standard thread. The valve opening shall be 5-1/4 inch diameter. The hydrant shall have a positive and automatic barrel drain.

Hydrant shall be M & H, Mueller, Clow Medallion, or approved equal. All hydrants shall be bagged until system is approved.

All hook-ups to fire hydrants for temporary water for whatever purpose shall be approved by the utility division and will require a Hydrant Use Permit.

Hydrant valves installed in unpaved areas shall have a 4-inch thick, 2-foot square concrete pad placed around them.

Hydrant shall have a reflective blue raised pavement marker 4" off centerline.

D. The Department of Public Works and Fire District 12 work together to ensure that adequate hydrant spacing and installation are achieved.

Unless otherwise required by the governing authority, the following guidelines shall apply for hydrant number and location:

1. At least one hydrant shall be installed at all intersections.

2. All hydrants newly installed in a single family residential area shall be supplied by not less than eight (8) inch circulating mains. Dead end mains supplying fire hydrants must be at least eight (8) inches in diameter, except hydrant leads up to fifty (50) feet long may be six (6) inches in diameter.

3. Hydrant spacing of 600 feet shall be required for single family residential areas.

4. Fire hydrants shall be installed at the ends of dead end lines which are more than three hundred (300) feet in length. Said hydrants may later be moved to conform to standard spacing requirements when the main is again extended, under supervision of the Superintendent.

5. No one shall plant any vegetation, erect any structure, or perform any action which results in obstructing the view of a fire hydrant for a distance of fifty (50) feet. The owner and/or occupant of any area in which a hydrant is located shall be responsible for removing weed and tree growth from around the hydrant for a distance of not less than ten (10) feet. The purpose of this part is to maintain a clear visual area around the hydrant.

6. All fire hydrants installed as required by these standards shall be served by the City of Marysville unless conditions warrant a waiver of this provision.

7. Fire hydrants shall be set as shown in standard detail 2-060-001.

8. Where needed, the Department of Public Works or Fire District 12 may require hydrants to be protected by two or more posts, per standard plan 2-060-002.

9. Fire hydrants must be installed, tested, and accepted prior to final plat acceptance or the issuance of an occupancy permit.

10. Fire hydrants shall be installed with a tee and an auxiliary gate valve between the service main and the hydrant sufficient to permit repair and replacement of the hydrant without disruption of water service. The location of all valves and fire hydrants installed shall be properly and accurately marked on identifiable plans or drawings.

11. Hydrants shall stand plumb, be set to the finished grade with the lowest outlet of the hydrant no less than eighteen (18) inches above grade and no less than thirty-six (36) inches of clear area about the hydrant for clearance of a hydrant wrench on all outlets and on the control valve. The pumper port shall face the street. Where the street cannot be clearly defined or recognized, the port shall

face the most likely route of approach and location of the fire truck while pumping as determined by the City Engineer.

12. When any portion of a proposed building is in excess of 200 feet from a public street right-of-way, on-site hydrants or a building sprinkler system shall be required. Such hydrants shall be located per Fire District 12 and easements for such hydrants, leads, and water mains, shall be granted to the City.

13. The installation of fire hydrants shall be required of the owner and/or developer of any future business, commercial, institutional, or industrial facility as follows:

    a) Buildings having required fire flows of less than 2500 gpm, may have fire hydrants on one side of the building only.

    b) When the required fire flow is over 2500 gpm, the fire hydrants shall be served by a main which loops around the building or complex of buildings and reconnects back into the distribution main.

    c) The number of fire hydrants shall be determined on an average spacing of three hundred (300) feet computed on an imaginary line parallel to and not less than fifty (50) feet from the structure. All hydrants are to be accessible to fire department pumpers over roads capable of supporting such fire apparatus. The City Engineer shall determine the location of the fire hydrants depending on utility, topography, and building location. Hydrants shall be a minimum of fifty (50) feet out from the building, minor deviations may be granted.

    d) The lead from the service main to the hydrant shall be no less than six (6) inches in diameter. Any hydrant leads over fifty (50) feet in length from service to the hydrant shall be no less than eight (8) inches in diameter. The provisions of this part shall apply without exception and regardless of the size of the service main.

    e) Fire hydrants shall be set as shown in standard detail 2-060-001.

f) For requirements regarding use, size, and location of a fire department connection (FDC) and/or post indicator valve, contact Fire District 12. Location of FDC shall be shown on water plans.

g) Fire hydrants must be installed, tested, and accepted prior to the issuance of an occupancy permit.

h) All fire hydrants installed as required by these standards shall be served by the City of Marysville unless conditions warrant a waiver of this provision.

i) The installation of private hydrants as defined herein shall be limited to those cases when the number of public hydrants installed under the distance provision of this section shall be insufficient in number. Private hydrants shall meet City requirements for public hydrants and shall be located as designated by the approving authority. The City of Marysville shall have the right to go upon the premises and to use the private hydrant for public purposes, including testing, flushing, and emergency uses.

j) Installation shall further conform to the provisions in 2-060 D 4,5,8, 10, and 11.

2-070 Valves All valves and fittings shall be ductile iron with ANSI flanges or mechanical joint ends. All existing valves shall be operated by City employees only.

All valves shall be inspected upon delivery in the field to ensure proper working order and damage to protective coatings before installation and shall be free of all rust and dirt. They shall be set and jointed to the pipe in the manner as set forth in the AWWA Standards for the type of connecting ends furnished. No valves shall be located in such position as to place the valve chamber or box in any roadside ditch, drainage ditch, or channel.

Valves shall be installed in the distribution system at sufficient intervals to facilitate system repair and maintenance but in no case shall be less than one valve every 1000 feet. Generally, valving shall be installed at all intersections and on each end of easements. Specific requirements for valve spacing will be made at the plan review stage.

A. Gate Valve, 4 inch to 12 inch. The design, materials, and workmanship of all gate valves shall conform to AWWA C515-80 latest revision. Gate valves shall be resilient wedge non-rising stem (NRS) with two internal O-ring stem seals. Gate valves shall be Mueller, M & H, Clow R/W or Waterous Series 500, or approved equal.

   Gate valves shall be used on all 4-inch to 12-inch lines.

B. Butterfly valves shall conform to ANSI/AWWA C504, Class 150, with cast iron short body and "O" ring stem seal. Valves in chambers shall have a manual crank operation. Buried valves shall have a stem extension with AWWA 2-inch operating nut and suitable valve box. Butterfly valves shall be Dresser "450", or approved equal.

   Butterfly valves shall be used on all lines 14 inches and larger.

C. Valve Box. All valves shall have a standard APWA cast iron water valve box set to grade with two-piece, extension type cast iron riser from valve. Valve box shall have a lug type cover, 8" top and 24" bottom. Valve box lids shall have the word "WATER" cast in the upper surface.

   If valves are not set in paved area, a 4-inch thick 2 foot square concrete pad shall be set around each valve box at finished grade. In areas where valve box falls in road shoulder, the ditch and shoulder shall be graded before placing asphalt or concrete pad. The valve and valve box shall be set plumb with the valve box centered on the operator nut. Valve boxes shall be set flush in pavement or road shoulder. See standard drawing 2-070-001, and 2-070-004.

D. Operating Valve Nut Extension. A valve stem extension shall be installed whenever the valves operating nut is more than 48 inches below finished grade. Extensions are to be a minimum of 12 inches with only one extension per valve. The operator nut extension

shall extend into the top section of the valve box and shall clear the bottom of the lid by a minimum of 10 inches.

E. Valve Marker Post. Marker posts shall be carsonite CUM-375 blue with 2 anchors at bottom of marker. See standard plan 2-070-002.

F. Check Valve. Check valves for permanent installations other than cross connection control shall be rated for 150 psi working pressure, unless otherwise specified, and shall have adjustable tension lever and spring to provide non-slamming action under all conditions unless otherwise specified.

G. Air and Vacuum Release Valve. Air and vacuum release valves (ARV) shall be APCO 145C combination air release valve. Installation shall be as shown on standard drawings. The installation shall be set at the high point of the line when required. Where possible pipes are to be graded to limit the number of ARV's needed.

2-080 Pressure Reducing Stations and Pressure Reducing Valves

A. Unless otherwise noted in Comprehensive Water Plans, a standard pressure reducing station shall have a Cla-Val model 90G-01 BCSY pressure reducing main valve of approved size with flanged ends. Pressure reducing valves shall have flow opening/closing speed controls, epoxy coated body, and valve position indicator. A 2" Cla-Val model 90G-01ABCS pressure reducing valve with threaded ends shall be installed on the bypass side of the larger pressure reducing valve line. Pressure reducing valves, 2" and smaller, shall be equipped with stainless steel trim (seal, stem, and cover bearing). Pilot controls shall be on the side of PRV facing the vault interior. See Standard Plans 2-080-001 and 2-080-002.

Strainers shall be installed on the inlet side of each pressure reducing valve. The bypass shall be fitted with bronze ball valves sized to correspond with the bypass inlet and outlet size.

Strainers shall be iron bodied "Y" type equal in size to corresponding pressure reducing valve. Strainer shall feature bolted cover machined to hold screen securely in place and tapped with iron pipe threads for corporation stop. Screen shall be constructed

from perforated stainless steel. Main-line strainer shall have flanged-ends and bypass strainer shall have threaded ends.

The vault shall be equal to Utility Vault Co. model 687-LA with cover 687-TL-2-322P as specified in the standard detail. Vault exterior shall be coated with coal tar enamel, or equal. See standard drawings.

When pressure reducing stations are required or needed, all pipe, fittings, and equipment shall be supported and blocked against static and dynamic loading in accordance with the equipment manufacturers' recommendations and as approved by Public Works. Drain lines from pumps or other equipment shall be piped to a below grade drainage system connected to the station sump or drain.

B. Individual Pressure Reducing Valve (Residential). When individual lot pressure exceeds 80 psi, an individual pressure reducing valve shall be installed by the property owner and shall be direct-action piston type with integral strainer and bypass. Valve body shall be bronze with threaded outlet end and integral union on inlet end. Valve shall be line-sized with spring range from 25 to 75 psi. Individual pressure reducing valves shall be Wilkens 600 series, Watts U5, or approved equal. The reducing valve shall be the property of the home owner.

All other appurtenances shall be as shown in the Standard Drawing 2-080-003.

C. Individual Pressure Reducing Valve (Multi-Family or Commercial). Individual pressure reducing valve (PRV) shall be Mueller Model H-9300 or an approved equal. An individual PRV shall be preceded by a strainer. PRV's shall be direct-acting and diaphragm actuated with a spring mechanism for a range of 25-85 psi. Valve shall be line sized. Valve body shall be cast bronze with inside iron pipe threads on both ends. All other appurtenances shall be as shown in the standard drawing 2-080-003 These appurtenances shall be the property of the landowner.

2-090 Service Connection

A. All service connections relating to new development shall be single meter services, unless approved by the Director, installed by the developer at the time of mainline construction. After the lines have been constructed, tested, approved, and a letter of acceptance has been issued, the Owner may apply for a water meter. The City will install a water meter after the application has been made and all applicable fees have been paid. Water meters will be set only after system is inspected and approved.

B. When water is desired to a parcel fronting an existing main but not served by an existing setter, an application must be made to the City. Upon approval of the application and payment of all applicable, fees, the City will allow tapping of the main, and installation of the meter, box, and setter.

C. Corporation stop shall be all bronze alloy and shall be Ford, Mueller, or approved equal in accordance with AWWA Standard C800 with AWWA tapered thread (CC) inlet by compression fitting for copper outlet.

Corporation stops for 1" tap shall be ball valve type. Corporation stops for 1-1/2" and 2" tap shall be the ball valve type with D.I. service saddles and I.P. thread inlets by compression fitting outlets.

D. Service connections on 4-inch ductile iron mains or for any service shall be installed with Mueller, Rockwell, Romac or approval equal pipe saddles. Direct taps may be made for 3/4 inch and 1 inch services on thickness Class 52 ductile iron pipe 6 inch I.D. or larger. The minimum acceptable tap size shall be 3/4 inch.

Service saddle shall be all bronze alloy and shall be Romac style 202 with IP thread or approved equal. Saddles used in AC pipe shall have stainless steel straps. All clamps shall have rubber gasket and iron pipe threaded outlets.

E. Service lines shall be copper pipe only for 1" services. Polyethylene 1-1/2" & 2" water service line shall be copper tube size (cts)- OD ASTM D-2737-SDR9 (PE 3408).

Polyethylene shall:

1. Meet the requirements of AWWA C901.
2. Be high molecular mass with at least 200 psi rating.

3. Have a #10 copper trace wire wrapped along its entire length (one wrap per foot, min.) with one end wrapped around the saddle bolt and secured between 2 nuts. The other end will be exposed in the meter box.

All copper pipe for underground water service less than 1-1/2" shall be seamless conforming to ASTM B88 (ANSI H33.1) Type "K" annealed tubing.

Copper service pipe 1-1/2" or larger shall be Type K hard drawn, 20' lengths. To avoid couplings under a road, Type K annealed tubing shall be used.

F. Master meters will not be allowed for service to more than one per building. An approved backflow prevention system must be installed in conjunction with any master meter. Deviations to this may be granted by the City Engineer.

G. Meter Setter. Meter setters (1" and smaller) shall not have double purpose couplings. Meter setters (1" and smaller) shall have angle meter valve with drilled wings for padlock, twelve (12") inches high, unless otherwise specified. The angle copper setter for the size meter to be installed, see Standard Details.

1-1/2" and 2" meter setters shall have vertical inlet and outlet tees with 1" lateral bypass, flanged ball meter valves on inlet and outlet, ball valve on bypass, and padlock wings on all valves, see Standard Details 2-090-002.

H. Meter Box. The Meter Box shall be constructed of LMDPE (Linear Medium Density Polyethylene) for impact strength and shall have a wall thickness of no less than .500". The Meter Box, with cover installed, shall be able to bear a 20,000lb vertical load when transferred through a one-inch (1") thick nine-inch square (9" x 9") plate. Meter Box shall be able to withstand a 200lb lateral load, applied with a four-inch square (4" x 4") plate positioned one-inch (1") below the top center of the box, maximum deflecting shall not exceed one-inch (1").

The Meter Box shall be black on the exterior to prevent UV degradation, and bright white on the interior to reflect light and ease meter reading and service. The box shall be designed in such a way as to have an integral flange, no more that 3" from the top, to support the box in concrete, paving or soil, and a bottom flange a minimum of 1" wide, to help resist subsidence.

The box may have two removable (pre-cut) pipe entry areas, 3" wide x 4" high, located on the center of each end (short side) of the box. The box shall be designed in such a

way as to be securely stackable. The box shall weigh no more than fifteen pounds (15 lb) for safety and ease of handling, transport and installation. All dimensions shall be in accordance with Company drawing. Meter boxes shall be as specified in the standard plans.

Cover shall provide a slip resistant surface with a coefficient of friction greater than 0.5 when tested for compliance to ASTM C-1028. Marking shall be indent into the cover surface to resist wear.

Cover shall be constructed of polymer concrete reinforced with multiple layers of continuous strand woven borosilicate fiberglass cloth. Reinforcing fabric shall be required along the inner and outer surfaces of the cover and incorporated into the matrix such that the glass fiber is not exposed to moisture intrusion. Compressive strength of the material matrix shall be no less than 11,000 psi. Molded cover shall be capable of withstanding vertical load proof test of 20,000 lbf when tested in the corresponding body. Manufacturer shall be able to document compliance with material strength and unit (cover and body) proof of design testing.

Cover shall have a hinged access door made from the same material as the outer portion of the cover and no less that 8"x9" clear opening as the drawing requires.

The box shall weigh no more than fifty pounds (50 lb) for safety and ease of handling, transport and installation. Covers shall be as specified in the standard plans.

I. Any plumbing in a residential or nonresidential facility providing water for human consumption which is connected to a public water system shall be lead free. With respect to solders and flux lead free shall mean no more than 0.2% lead, and with respect to pipes and pipe fittings no more than 8% lead.

2-100 <u>Steel Casing</u>

Steel casing shall be black steel pipe conforming to ASTM A53.

Casing wall thickness shall be 0.250 inch for casings 24 inches or less in diameter and 0.375 inch for casings over 24 inches in diameter.

Carrier pipe for water shall be Ductile Iron, Class 52.

Pipe spacers shall be Cascade style CCS with 8-inch runners as available from Cascade Waterworks or equivalent vendor. Casing pipe and spacers shall be sized for pipe being

installed. Install minimum of three spacers per section of pipe. See Standard Drawing 2-100-001.

2-110 Galvanized Iron Pipe

Where galvanized iron pipe is specified, the pipe shall be standard weight, Schedule 40, steel pipe per Standard Specification for black and hot-dipped, zinc-coated (galvanized) welded and seamless steel pipe for ordinary uses (ASTM A-120). Fittings shall be screwed malleable iron galvanized per ANSI B16.3. Galvanized pipe shall be used only for PRV's and dry pipe in pressure relief and vacuum breaker assemblies.

2-120 Blowoff Assembly

If a fire hydrant is not located at the end of a dead end main, a blowoff assembly shall be required. On water mains which will be extended in the future, provide valve and blocking as shown on standard drawings 2-120-001 and 2-120-002.

2-130 Concrete Bedding and Blocking

Bedding, blocking, encasement, or slope anchor concrete shall be mixed from materials acceptable to the Engineer and shall have a 30-day compressive strength of not less than 2,500 psi. The mix shall contain five (5) sacks of cement per cubic yard and shall be of such consistency that the slump is between 1 inch and 5 inches. All concrete shall be mechanically mixed and contain no chloride.

Concrete thrust blocking, as indicated on the Standard Details, shall be placed at bends, tees, dead ends, crosses, and as designated by the Engineer.

Location of thrust blocking shall be shown on plans. Thrust block concrete shall be poured against undisturbed earth. A plastic barrier shall be placed between all thrust blocks and fittings. See standard detail numbers 2-130-001, 2-130-002, and 2-120-003 for thrust block locations and calculations. All blocking as shown on the Standard Details are considered as minimums, and consideration should be given to unusual circumstances such as unstable soil, adjacent pipe lines, and topography.

2-140 Joint Restraint

Joint restraint methods shall be as per the approved materials list and/or the Standard Drawings. Mega Lugs & Field Lock Gaskets are required on watermains greater than or equal to 15% slope, or in any fill section.

2-150 Backflow Prevention

All water system connections to serve buildings or properties with domestic potable water, fire sprinkler systems, or irrigation systems shall comply with the minimum backflow requirements as established by the Department of Health (DOH) and the City of Marysville.

The installation of all backflow devices is required to protect the existing water system and users from possible contamination. To prevent contaminated water from the new main from entering the existing distribution system, a double check valve assembly shall be used on the line supplying the water. A double check valve assembly is sufficient backflow protection only for filling and flushing of the new main. During the hydrostatic pressure test, the temporary connection between the new main and the existing distribution system shall be removed.

For fire and irrigation, the minimum level of backflow prevention required is a double check valve assembly. Fire services shall have a double detector check valve assembly. Air gap and reduced pressure backflow assemblies are required whenever a potential health hazard exists.

All approved Reduced Pressure Backflow Assemblies are listed on the most current copy of the City of Marysville Cross-Connection Control Program. The assembly shall include a tightly closing resilient seated shut-off valve on each end of the body and each assembly shall be fitted with four properly located resilient seated test cocks.

All other appurtenances shall be as shown in the standard detail 2-150-001.

Public Works shall get the certificate of testing of any backflow prevention device before releasing the certificate of occupancy on any building or acceptance of water system. A list of approved testers may be obtained from Washington Environmental Training Resource Center (WETRC) located in Auburn, Washington.

2-151 Reduced Pressure Backflow Assembly with Detector This assembly shall include a line-sized D.O.H. approved (listed on the most current copy of "Accepted Cross-Connection Control Assemblies" published by Washington State Department of Health. Reduced Pressure Backflow Assembly with a parallel 3/4" meter and 3/4" D.O.H. approved Reduced Pressure Backflow Assembly. Each assembly shall be housed in a hot box or approved equivalent and include a tightly closing resilient seated shut-off valve on each end of the body and each assembly shall be fitted with four properly located resilient seated test cocks.

All other appurtenances shall be as shown in standard detail 2-151-001.

2-152 Double Check Valve Assembly All Double Check Valve Assemblies shall be the one listed on the most current copy of "Accepted Cross-Connection Control Assemblies" published by Washington D.O.H. The assembly shall include a tightly closing resilient seated shut-off valve on each end of the body and each assembly shall be fitted with four properly located resilient seated test cocks.

2-153 Double Check Valve Assembly with Detector

This assembly shall include a line sized D.O.H. approved (listed on the most current copy of "Accepted Cross-Connection Control Assemblies" published by Washington Department of Health Double Check Valve Assembly with a parallel 3/4" meter and 3/4" approved double check valve assembly. Each assembly shall include a tightly closing resilient seated shut-off valve on each end of the body and each assembly shall be fitted with four properly located resilient seated test cocks.

All other appurtenances shall be as shown in the standard detail 2-153-001.

2-154 Backflow Device Resilient Seated Shut-off Valves Each valve shall be marked with model number with designation of resilient seat; such as "RS" or "R", which must be cast, molded, or affixed onto the body or bonnet of the valve. All ferrous bodied valves shall be coated with a minimum of 4 mils. of epoxy or equivalent polymerized coating. 2" and smaller R.P.B.A.s and D.C.V.A.s shall use ball valves, and all 2-1/2" and larger R.P.B.A.s and D.C.V.A.s shall use resilient seated gate valves for domestic supply and resilient seated O.S. and Y. valves for firelines.

The minimum requirements for all resilient seated gate valves shall, in design, material, and workmanship, conform to the standards of AWWA C509.

2-160 Existing Utilities

When utility services occupy the same space as the new water main, the contractor shall do all necessary excavation to fully expose such services. The contractor shall protect said services and work around them during excavating and pipe laying operations. The contractor shall be responsible for all damages to the services due to his operation and shall immediately notify the engineer and arrange for replacement of all damaged services.

In the event of conflict, the contractor shall remove and restore existing catch basin connections, inlet connections, drains, side sewers, inlets, and other sewerage and drainage facilities. All restoration shall be constructed to city standards. Water main pipe shall be installed to clear mainline sewers and storm drains.

It is anticipated that the contractor will encounter private water services during work operations. Records of these utilities often are not maintained by the City and will not be field located by the City Water division. It shall be the contractor's responsibility to ascertain the location of and protect these private utilities from damage.

2-170 Water Main/Sanitary Sewer Crossings The Contractor shall maintain a minimum of 18 inches of vertical separation and 10 feet of horizontal separation between sanitary sewers and water mains. The minimum cover for water main of 42 inches may be reduced to 36 inches upon approval by the City Engineer to provide for as much vertical separation as possible.

The longest standard length of water pipe shall be installed so that the joints will fall equidistant from any sewer crossing. In some cases where minimum separation cannot be maintained, it may be necessary to encase the water pipe and/or sewer service in a carrier pipe or concrete. No concrete shall be installed unless specifically directed by the City Engineer.

2-180 Staking All surveying and staking shall be performed by an engineering or surveying firm capable of performing such work. The engineer or surveyor directing such work shall be licensed as a Professional Engineer or Professional Land Surveyor by the State of Washington.

A preconstruction meeting shall be held with the City prior to commencing staking. All construction staking shall be inspected by the City prior to construction.

The minimum staking of waterlines shall be as directed by the City Engineer or as follows:

A. Stake centerline alignment every 50 feet with cut or fill to invert of pipe maintaining 42 inches of cover over pipe. Cuts are normally not required when road grade has been built to subgrade elevation.

B. Stake alignment of all fire hydrants, tees, water meters, setters and other fixtures and mark cut or fill to hydrant flange finished grade.

2-190 Trench Excavation

A. Prior to any pavement cutting or removal, or excavation for pipe laying, the contractor shall verify, in the presence of the City's inspector, the location and depth of the existing water mains at the points where connections are to be made. The contractor shall verify the dimensions, type, and condition of the existing water main. If necessary, the grade shall be adjusted so neither a high spot nor a low spot is created adjacent to the connection to the existing water mains.

B. Clearing and grubbing where required shall be performed within the easement or public right-of-way as permitted by the City and/or governing agencies. Debris resulting from the clearing and grubbing shall be disposed of by the owner or contractor in accordance with the terms of all applicable permits.

C. Trenches shall be excavated to the line and depth designated by the Plans to provide a minimum of 42 inches of cover over the pipe and the maximum depth shall not be greater than 60 inches of cover over the pipe. Except for unusual circumstances where approved by the City, the trench sides shall be excavated vertically and the trench width shall be excavated only to such widths as are necessary for adequate working space as allowed by the governing agency. The trench shall be kept free from water

until joining is complete. Surface water shall be diverted so as not to enter the trench. The owner shall maintain sufficient pumping equipment on the job to ensure that these provisions are carried out.

D. The Contractor shall perform all excavation of every description and whatever substance encountered and boulders, rocks, roots, and other obstructions shall be entirely removed or cut out to the widths of the trench and to a depth 6 inches below water main grade. Where materials are removed from below water main grade, the trench shall be backfilled to grade with pit run sand and gravel and thoroughly compacted.

E. Trenching and shoring operations shall not proceed more than 100 feet in advance of pipe laying without approval of the City Engineer, and shall be in conformance with Washington Industrial Safety and Health Administration (WISHA) and Office of Safety and Health Administration (OSHA) Safety Standard.

F. The bottom of the trench shall be finished to grade with hand tools in such a manner that the pipe will have bearing along the entire length of the barrel. The bell holes shall be excavated with hand tools to sufficient size to make up the joint.

G. Material excavated from trenches and piled adjacent to the trench, or in a roadway or public thoroughfare, shall be piled and maintained so that the toe of the slope of the material is at least 3 feet from the edge of the trench. It shall be piled in such a manner as will cause a minimum of inconvenience to public travel, and provisions shall be made for traffic control as necessary. Free access shall be provided to fire hydrants, water valves, and meters, and clearance shall be left to enable free flow of storm water in gutters, other conduits, and natural watercourses.

H. The minimum and maximum trench widths for water main installation shall be as follows:

	TRENCH WIDTHS (In Inches)		
Nominal Pipe Diameter	Minimum Earth	Minimum Rock	Maximum
2	18	24	36
3	18	24	36
4	18	24	36
6	21	24	36
8	24	24	36
12	28	28	40

16	30	30	42
18	31	31	43
20	33	33	45
24	36	36	48
30	40	40	52
36	47	47	59
42	54	54	66
48	61	61	73
54	68	68	80
60	75	75	87

2-200 Trench Shoring

Where trench excavation equal or exceeds a depth of 4 feet, the developer/contractor shall provide, construct, maintain and remove, as required, safety systems that meet the requirements of the Washington Industrial Safety and Health Act, RCW 49.17, including WAC 296-155. The trench safety systems shall be designed by a qualified person, and meet accepted engineering requirements (see WAC 296-155-660).

The Contractor shall adequately shore trenches to protect the work, existing property, utilities, pavement, etc., and to provide safe working conditions in the trench. The method of shoring shall be according to the contractor's design. The contractor may elect to use a combination of shoring or overbreak, tunneling, boring, sliding trench shields, or other methods of accomplishing the work, provided the method meets all applicable local, state, and federal safety codes. Damages resulting from improper cribbing or from failure to crib shall be the sole responsibility of the contractor.

2-210 Dewatering of Trench

Where water is encountered in the trench, it shall be removed during pipe-laying operations and the trench so maintained until the ends of the pipe are sealed and provisions are made to prevent floating of the pipe. Trench water or other deleterious materials shall not be allowed to enter the pipe at any time.

The developer/contractor shall furnish, install, and operate all necessary equipment to keep the trench above the foundation level free from water during construction, and shall dewater

and dispose of the water so as not to cause injury to public or private property or nuisance to the public. Sufficient pumping equipment in good working condition shall be available at all times for all emergencies, including power outage, and shall have available at all times competent workers for the operation of the pumping equipment.

2-220 Installation

A. The installation of all water mains and appurtenances shall be in accordance with the construction plans as approved by the City Engineer for the project. Any deviation or changes are to be approved by Public Works before the changes are incorporated into the work.

B. Unsuitable Material - Whenever in excavating the trench for water mains and the bottom of the trench exposes peat, soft clay, quicksand, or other unsuitable material, such material shall be removed from the trench and replaced by Foundation Material "Ballast" as specified in the WSDOT Standard Specifications.

C. Handling of Pipe - Pipe shall be handled in a manner that will prevent damage to the pipe, pipe lining, or coating. Pipe and fittings shall be loaded and unloaded using hoists and slings in a manner to avoid shock or damage, and under no circumstances shall they be dropped, skidded, or rolled against other pipe. Damaged pipe will be rejected, and the contractor shall immediately place all damaged pipe apart form the undamaged and shall remove the damaged pipe from the site within 24 hours.

Dirt or other foreign material shall be prevented from entering the pipe or pipe joint during handling or laying operations, and any pipe or fitting that has been installed with dirt or foreign material in it shall be removed, cleaned, and relaid. When pipe laying is not in progress, the open ends of the pipe shall be closed by a watertight plus or by other means approved by the City Engineer.

Pipe shall be stacked in such a manner as to prevent damage to the pipe, to prevent dirt and debris from entering the pipe, and to prevent any movement of the pipe. The

bottom tiers of the stack shall be kept off the ground on timbers, or other similar supports.

D. Cutting Pipe - Whenever it becomes necessary to cut a length of pipe, the cut shall be made by abrasive saw or by pipe cutter. All pipe ends shall be square with the longitudinal axis of the pipe and the outside shall be beveled and otherwise smoothed so that good connections can be made without damage to the gasket. Threads shall be cleanly cut. Oxyacetylene torch cutting of ductile iron will not be allowed.

E. Bedding the Pipe - Bedding material, when specified or required by the Engineer shall be as specified in the WSDOT Standard Specifications. For the type of pipe (rigid or flexible) being bedded, bedding is defined as 6 inches below the pipe, around the pipe, and 12 inches above the pipe. Native material will normally be used for bedding for ductile iron pipe unless judged unsuitable by the Engineer.

2-230 Laying Pipe on Curves

Long radius curves, either horizontal or vertical, may be laid with standard pipe by deflecting the joints. If the pipe is shown curved in the drawings and no special fittings are shown, the contractor can assume that the curves can be made by deflecting the joints with standard lengths of pipe. If shorter lengths are required, the drawings will indicate maximum lengths that can be used. The amount of deflection at each pipe joint when pipe is laid on a horizontal or vertical curve shall not exceed the manufacturer's printed recommended deflections.

Where field conditions require deflection or curves not anticipated in the drawings, the Engineer will determine the methods to be used.

When rubber gasketed pipe is laid on a curve, the pipe shall be jointed in a straight alignment and then deflected to the curved alignment. Trenches shall be made wider on curves for this purpose.

Maximum deflections at point joints and laying radius for various pipe lengths are specified in the following table, or if not, shall conform to the manufacturer's and AWWA for the given type of pipe:

Maximum Permissible Deflection in Laying Mechanical-Joint Pipe

Size of Pipe	Max. Permissible Deflections Per Length - In Inches				Approx. Radius of Curve Produced by Succession of Deflections			
Inches	12-ft Length	16-ft. Length	18-ft. Length	20-ft. Length	12-ft. Length	16-ft. Length	18-ft. Length	20-ft. Length
3	16	23	25	27	105	130	155	180
4	16	23	25	27	105	130	155	180
6	14	19	22	24	120	160	175	200
8	11	14	16	18	160	220	240	265
10	11	14	16	18	160	220	240	265
12	11	14	16	18	160	220	240	265
14	7	10	11	12	250	310	350	400
16	7	10	11	12	250	310	350	400
18	6	8	9	10	290	380	430	480
20	6	8	9	10	290	380	430	480
24	5	7	7	8	350	440	555	600
30	5	7	7	8	350	440	555	600
36	4	6	6	7	430	510	650	690

Maximum Permissible Deflection in Laying Push-In Joint Pipe

Size of Pipe	Max. Permissible Deflections Per Length - In Inches				Approx. Radius of Curve Produced by Succession of Deflections			
Inches	12-ft Length	16-ft. Length	18-ft. Length	20-ft. Length	12-ft. Length	16-ft. Length	18-ft. Length	20-ft. Length
3	10	14	15	17	175	220	260	280
4	10	14	15	17	175	220	260	280
6	10	14	15	17	175	220	260	280
8	10	14	15	17	175	220	260	280
10	10	14	15	17	175	220	260	280
12	10	14	15	17	175	220	260	280
14	6	8	9	10	290	380	430	480
16	6	8	9	10	290	380	430	480
18	6	8	9	10	290	380	430	480
20	6	8	9	10	290	380	430	480
24	6	8	9	10	290	380	430	480
30	4	5	6	7	430	615	650	690
36	4	5	6	7	430	615	650	690

2-240 Trench Backfill

Suitable native material excavated during trenching shall be used for trench backfill unless notified by the City Engineer that the native material is unsuitable. The City Engineer or his representative will examine excavated native material at the time of excavation to determine its suitability for use as backfill. Native material will be considered suitable for trench backfill if it is:

a) Capable of attaining the degree of compaction specified within reasonable tolerance of optimum moisture content.

b) Reasonably free of organic material, clay, frozen lumps, rocks, or other deleterious matter.

Unsuitable backfill material shall be removed from the site and hauled to an approved disposal site. The City Engineer shall be provided with the location of all disposal sites to be used and also copies of the permits and approvals for such disposal sites.

Imported material shall meet the requirements of Gravel Borrow or Crushed Surfacing Base Course as specified in the WSDOT Standard Specifications. In backfilling the trench, the Contractor shall take all necessary precautions to protect the pipe from any damage or shifting. The contractor shall backfill from the side of the trench to a maximum uniform depth of 1 foot above the crown of the ductile iron pipe before starting mechanical compaction.

During all phases of the backfilling operations and testing as outlined herein, the contractor shall protect the pipe installation, provide for the maintenance of traffic as may be necessary, and provide for the safety of property and persons.

Where governmental agencies other than the City have jurisdiction over roadways, the backfill and compaction shall be done to the satisfaction of the agency having jurisdiction. If suitable backfill material is not available from trenching operations or temporary traffic control and traffic safety issues exist, the City may order the placing of bedding around the water main and gravel base or controlled density fill for backfilling the trench.

2-241 Recycled Concrete

Use of recycled concrete for trench backfill and crushed surfacing base course (1-1/4" minus) material is encouraged; provided that it is not used as a final surface finish. Recycled concrete shall meet the requirements for crushed surfacing base course material set forth in Section 9-03.9(3) "Crushed Surfacing" of the WSDOT Standard Specifications.

Use of recycled concrete for crushed surfacing top course material (5/8" minus) is not allowed. Manufacturer's recovering concrete from sources other than concrete roadways, sidewalks, and slabs shall provide certification that the material supplied is free of contaminants.

2-242 Controlled Density Fill

Controlled density fill (CDF, aka flowable fill) shall be a mixture of portland cement, flyash (optional), aggregates, and water. It shall be proportioned to provide a grouty, non-segregating, free flowing, self-consolidating and excavatable material that will result in a non-settling fill which has measurable unconfined compressive strength. Unless otherwise specified, unit weights shall range from 125 lbs. per cubic foot to 155 lbs. per cubic foot.

Materials testing shall be with unconfined compressive test cylinders. Test data may be either laboratory trail batch data or field test data.

Specific mix designs may be required at the Engineer's discretion.

The unconfined compressive strength at 28 days shall be a minimum of 50 psi and a maximum of 100 psi. Material shall be a sand/grout slurry proportioned to be hand-excavatable after long-term strength gain.

If CDF is used for trench backfill on ductile iron, steel, or copper utility mains or services, the mains and services shall be encased in polyethylene wrap.

2-250 Compaction of Backfill

Trench backfill shall be spread in layers and be compacted by mechanical tampers of the impact type approved by the Engineer. Water settling will not be permitted. After the initial backfill is placed the remaining backfill material shall be placed in successive layers not exceeding 1 foot in loose thickness, and each layer shall be compacted to the density specified below:

a) Improved areas such as street and sidewalk areas shall be compacted to 95% of maximum dry density modified proctor.

b) Unimproved areas of landscape areas shall be compacted to 90% of maximum dry density modified proctor.

2-260 Temporary Street Patching

Temporary restoration of trenches shall be accomplished by using 2" Class B Asphalt Concrete Pavement when available, 2" Asphalt Treated Base (ATB), or steel plates.

ATB used for temporary restoration may be dumped directly into the trench, bladed and rolled. After rolling, the trench must be filled flush with the existing asphalt concrete pavement to provide a smooth riding surface.

All temporary patches shall be maintained by the Contractor until such time as the permanent pavement patch is in place. If the Contractor is unable to maintain a patch for whatever reason, the City will patch it at actual cost plus overhead and materials.

2-270 Trench Pavement Restoration

Trench restoration shall be either by a patch or patch plus overlay as required by the City.

A. All trench and pavement cuts shall be made by spade sawcuts. All cuts shall be a minimum distance outside the trench width as prescribed by the City Engineer.

B. Replacement of the asphalt concrete or portland concrete cement shall be of existing depth plus 1 inch or 3 inches, whichever is greater.

C. Tack shall be applied to the existing pavement and edge of cut and shall be emulsified asphalt grade CSS-1 as specified in the WSDOT Standard Specifications. Tack coat shall be applied as specified in the WSDOT Standard Specifications.

D. Asphalt concrete Class B shall be placed on the prepared surface by an approved paving machine and shall be in accordance with the applicable requirements of the WSDOT Standard Specifications, except that longitudinal joints between successive layers of asphalt concrete shall be displaced laterally a minimum of 12 inches unless otherwise approved by the City Engineer. Fine and coarse aggregate shall be in accordance with the WSDOT Standard Specifications. Asphalt concrete over 2 inches thick shall be placed in equal lifts not to exceed 2 inches each.

All street surfaces, walks or driveways within the street trenching areas affected by the trenching shall be feathered and leveled to an extent that provides a smooth-riding connection and expedites drainage flow for the newly paved surface. Leveling and feathering as required by the City Engineer shall be accomplished by raking out the oversized aggregates from the Class B mix as appropriate.

Surface smoothness shall be per the WSDOT Standard Specifications.

E. All joints shall be sealed using paving asphalt AR4000W.

F. When trenching within the roadway shoulder(s), the shoulder shall be restored to its original or better condition.

G. The final patch shall be completed as soon as possible and shall be completed within 30 days after first opening the trench. This time frame may be adjusted if delays are due to inclement paving weather, or other adverse conditions that may exist. However, delaying of final patch of overlay work is allowable only subject to the City Engineer's approval.

2-280 Hydrostatic Pressure Tests

The City Engineer or his representative will inspect and observe the hydrostatic test of the pipe within 24 hours after notification by the Contractor that a section is ready for inspection and test. The Contractor shall contact the Engineer at least 24 hours in advance of the completion of sterilization and flushing and his representative shall be present when water samples are taken.

Prior to the acceptance of the work, the installation shall be subjected to a hydrostatic pressure test and any leaks or imperfections developing under said pressure shall be remedied by the Contractor before final acceptance of the work. No air will be allowed in the lines. The mains shall be tested between valves. Insofar as possible, no hydrostatic pressure shall be placed against the opposite side of the valve being tested. Test pressure shall be maintained while the entire installation being tested is inspected. Testing through fire hydrants shall not be permitted unless approved by The Director of Public Works or designee. The Contractor shall provide all necessary equipment and shall perform all work connected with the test. Tests shall be made after all valved connections have been made. At unvalved connection points, a temporary plug (or 2" blow-off assembly on lines without hydrants) shall be installed at the end of the new main. This shall include concrete blocking necessary to withstand pressures encountered during the hydrostatic test.

Once the new line is successfully tested and disinfected, the plug (blow-off) shall be removed and the connection to the existing main completed. The Contractor shall perform a preliminary test to assure that the equipment to be used for the test is adequate and in good operating condition and the air in the lines has been released before requesting the City Engineer witness the test. The City Engineer or his representative shall witness the test; if the test does not pass inspection for any reason, additional trips required to witness the test shall be done at the Contractor's expense.

The Contractor shall provide special plugs and blocking necessary in those locations where it would be necessary to test against butterfly valves to ensure that the pressure rating of these valves is not exceeded during testing.

All water mains and appurtenances shall be hydrostatically tested as specified in Section 7-09.3(23) of the WSDOT/ Standard Specifications.

2-290 Sterilization and Flushing of Water Mains

Sterilization of water mains shall be accomplished by the Contractor in accordance with the requirements of the State Health Department and in a manner satisfactory to the City Engineer. The section to be sterilized shall be thoroughly flushed at maximum flow established by the City Engineer prior to chlorination. Flushing period must be approved by the City. Sections will ordinarily be sterilized between adjacent valves unless, in the opinion of the City Engineer, a longer section may be satisfactorily handled. Chlorine shall be applied by solution feed at one end of the section with a valve or hydrant at the opposite end open sufficiently to permit a flow through during chlorine application. The chlorine solution shall be fed into the pipeline already mixed by an automatically proportioning applicator so as to provide a steady application rate of not less than 50 ppm chlorine. Hydrants along the chlorinated section shall be open during application until the presence of chlorine has definitely been detected in each hydrant run. When a chlorine concentration of not less than 50 ppm has been established throughout the line, the valves shall be closed and the line left undisturbed for 24 hours.

As an alternative, the Contractor may use granulated chlorine. Granulated chlorine (dry calcium hypochlorite at 65% - 70% chlorine) shall be placed in the pipe to yield a dosage of not less than 50 ppm. The number of ounces of 65% test calcium hypochlorite required for a 20-foot length of pipe equals .00843ld, in which "d" is the diameter in inches. The line shall then be thoroughly flushed and water samples taken for approval by the local health agency. Flushing period must be approved by the City. The Contractor shall exercise special care in flushing to avoid damage to surrounding property to conform to Water Quality Considerations.

Should the initial treatment result in an unsatisfactory bacteriological test, additional chlorine using the first procedure shall be repeated by the Contractor until satisfactory results are obtained. The Contractor shall be responsible for disposal of treated water flushed from mains and at no time shall chlorinated water from a new main be flushed into a body of fresh water. This is to include lakes, rivers, streams, storm drainage systems and any and all other waters where fish or other natural water life can be expected. Disposal may be made to any available sanitary sewer provided the rate of disposal will not overload the sewer.

Main extensions shall not be connected to the City water system until pressure and bacteriological tests have passed all required standards.

2-291 Chlorine Dosage

References in Section 7-09.3(24) of the WSDOT Standard Specifications to an initial chlorine content of the water of not less than 50 mg/l is as follows.

The amounts of chlorine (Cl_2) required to give 50 mg/l for 100-foot lengths of various diameter of pipe are:

AMOUNTS OF CHLORINE REQUIRED FOR 50 MG/L DOSAGE

Pipe Size (Inches)	Volume of Water Per 100 ft. Length (gallons)	Household Bleach 5-1/4% (gallons)	Commercial Bleach 12-1/2% (gallons)
4	65.3	0.06	0.03
6	146.5	0.14	0.06
8	261.0	0.26	0.11
10	408.0	0.40	0.16
12	588.7	0.60	0.24
14	799.6	0.80	0.32
16	1044.4	1.0	0.42
20	1631.9	1.6	0.66
24	2349.9	2.2	0.94
30	3671.7	3.6	1.50
36	5287.3	5.0	2.20
42	7196.6	7.0	2.90
48	9399.6	9.2	3.20

GENERAL NOTES FOR CONSTRUCTION PLANS (WATER MAIN INSTALLATION)

1. All workmanship and material shall be in accordance with City of Marysville standards and the most current copy of the WSDOT Standard Specifications for Road, Bridge, and Municipal Construction.

2. A preconstruction meeting shall be held with the City prior to the start of construction.

3. It shall be the responsibility of the Contractor to locate or have located by the appropriate companies all utilities prior to beginning construction.

   Call Underground Locate at 1-800-553-4344 a minimum of 48 hours prior to any excavations.

4. Water pipe shall be ductile iron pipe standard thickness Class 52 cement-lined unless otherwise specified and shall conform to ANSI/AWWA C151/A21.51.

5. Gate valves shall be resilient wedge, NRS (Non Rising Stem) with O-rings seals. Valve ends shall be mechanical joint or ANSI flanges. Valves shall conform to AWWA 509-80. Valves shall be Mueller, M & H, Clow R/W or Waterous Series 500.

6. Fittings shall be ductile iron short body compact conforming to AWWA C110, C11 and C153 and shall be cement-mortar lined conforming to AWWA C104. The City will be given 72 hours notice prior to scheduling a shutdown. Where connections require "field verification", connection points will be exposed by Contractor and fittings verified 48 hours prior to distributing shut-down notices.;

7. Fire hydrants shall conform to AWWA C501 and shall be of standard manufacture and of a pattern approved by Marysville, with Stortz 5" quarter turn fitting. Hydrants shall be M & H Reliant Style 929 or Mueller A-423 (MJ). Hydrants shall be bagged until system is approved.

8. All lines shall be disinfected and flushed in conformance with WSDOT standards and specifications. All pipe shall be tested at 250 psi. The Contractor shall furnish all

temporary plugs, testing devices, etc. The City shall be present for all testing. The City will take purity tests, and connection will be authorized following passing of the tests. The Contractor shall not operate any valve or part of the City water system without notification and specific supervision of the City utility superintendent. The Contractor shall make all connections to the system required after making arrangements with the City in advance. Work and procedures shall conform to APWA Sec. 7-09.3(23)

9. Installation of pipe, fittings and valves, hydrants, and appurtenances shall conform to WSDOT standard specifications. Cover shall be 42 inches over the top of pipe unless otherwise noted on plans. In the event grade revision following water main construction results in cover over the water main of less than 3 feet or in excess of 5 feet, the water main shall be reconstructed by the Owner to conform to the specifications of the City of Marysville unless depth has been pre-approved by the City. All added costs of inspecting such water main reconstruction shall be charged to the developer.

10. Prior to construction of any water mains, the lot corners shall be staked and water main locations established by survey, cost of which is to be borne by the developer.

11. To maintain the required alignment, use short lengths and deflect the joints or use necessary bends.

12. Bedding material meeting the requirements for rigid pipe shall be placed to a depth of 6" under and around the pipe and to a depth of at least 12 inches over the top of the pipe. The bedding materials hall be rammed and tamped around the pipe by the use of shovels or other approved hand-held tools so as to provide firm and uniform support over the full length of all pipe, valves, and fittings. Care shall be taken to prevent any damage to the pipe or its protective coating.

13. Separation of water and sewer mains shall conform to W.D.O.E. standards or special construction requirements.

14. Services, blow-offs, and miscellaneous details shall be shown on the drawings or standard plans.

WATER SYSTEM APPROVED MATERIALS LIST

The following manufacturers have been approved for use for water and sewer. Where specific manufacturers are listed no other manufacturer may be used without prior approval by the Utility.

DUCTILE IRON PIPE

All manufacturers that meet the performance requirements specified under the material section of the standards.

DUCTILE IRON FITTINGS

All manufacturers that meet the performance requirements specified under the material section of the standards.

GALVANIZED IRON PIPE

All manufacturers that meet the performance requirements specified under the material section of the standards.

POLYETHYLENE PIPE

All manufacturers that meet the performance requirements specified under the material section of the standards.

JOINT RESTRAINT SYSTEMS

EBAA Iron (MEGALUG Series 1100)
Griffin Pipe Products Company (Snap-Lok, Bolt-Lok)
Romac (Grip Ring)
Star National Products (Shackle Products)
US Pipe (TR FLEX)

COUPLINGS

Romac, Dresser

STAINLESS STEEL REPAIR BANDS

Romac, Ford

CASING INSULATORS

Pipeline Seal and Insulator Co.
8" band Model C8G
12" band Model C12G

Cascade Waterworks Mfg. Co.

Stainless Steel Casing Spacers (catalog number depends on size)

CASING END SEALS

Pipeline Seal and Insulator Co.,

Standard Pull-on (Model S)
Custom Pull-on (Model G)

GATE VALVES

All manufacturers that meet the performance requirements specified under the material section of the standards.

PRV STATION

- PRESSURE REDUCING VALVES

CLA-VAL 90G-01BCSY	}	Approved Size for Main Valve
CLA-VAL 90G-01ACS	}	2" Bypass Valve

- STRAINERS

MUESSCO	751	}	6"
MUESSCO	11-BC	}	2"

(With brass or stainless steel perforated screen, 1/16" diameter, 144 holes per square inch)

- PRESSURE RELIEF VALVES

CLA-VAL 50G-01KC	}	2"

INDIVIDUAL PRESSURE REDUCING VALVES (Residential)

Wilkins 600 with built-in bypass.

INDIVIDUAL PRESSURE REDUCING VALVES (Commercial)

- PRESSURE REDUCING VALVES

Mueller H-9300, No. 2 setting

- PRESSURE RELIEF VALVES

CLA-VAL 55F

SERVICE SADDLES

1" tap:	Romac 101S
	Ford FS101 (4" through 8" mains)
1-1/2" &	Romac 202S
2" tap	Ford FS202

CORPORATION STOPS

1" size: Ford F1000G, FB 1000G
Mueller No. H-15008
AY McDonald 4701Q Plug Style, 4701BQ Ball Style

1-1/2" size: Ford Ballcorp FB1100G MIPX COMP
Mueller H 15023 IPTX110
AY McDonald 4701BQ Ball Style

2" size: Ford Ballcorp FB 1100G
Mueller H 15023 IPTX110
AY McDonald 4701BQ Ball Style

ANGLE METER VALVES

1-1/2" Irrigation: Ford FV 43666WG
Mueller 1-1/2" B 24276 Angle Ball Valve Flgx110

2" Irrigation: Ford FV 43777WG
Mueller 2" B 24276 Angle Ball Valve Flgx110

VALVE BOXES

Rich Manufacturing Co. #940

BUTTERFLY VALVES

All manufacturers that meet the performance requirements specified under the material section of the standards.

CHECK VALVES

Ludlow-Rennselaer List 340

AIR AND VACUUM RELEASE VALVES

APCO No. 143-C, Val-Matic No. 201C, Crispin U10

FIRE HYDRANTS

Mueller Centurion
M&H 129T or 929
Clow Medallion
East Jordon Iron Works

METER SETTERS

5/8" X 3/4": (horizontal):

Ford VBH-92-12W15
Mueller 5/8" x 3/4" (B-24104-2) 5/8 x 3/4 Setter Vertical inlet x 15" horizontal outlet

AY McDonald 62P212WCDD33 (5/8 x ¾ meter) with 15" horizontal outlet
AY McDonald 62F312WCDD 33 for (full ¾")
AY McDonald Adaptor from 1" to ¾" 4753Q MIPXCTS ADP7

1" x 1" (horizontal):

Ford VBH 94 15W15
Mueller 1" (B-24104-2) 1" Setter Vertical Inlet x 15" horizontal outlet

1" x 1" (vertical):

Ford VH-8612B-11-66

1-1/2" Domestic:

Muller H-1423-2 Custom Setter with Bypass and Check
AY McDonald 39 B612WWFF665

2" domestic:

Ford VFH 87 12B-11-77
AY McDonald 39 B712WWFF775

<u>METER BOXES (as listed or approved equal)</u>

5/8" X 3/4" Service:	Carson BCF1730-12 sku#17302500 HDPE cover: Carson HD1730sku#17304500 Lid shall be traffic rated if required.
3/4" X 3/4" Service:	Carson BCF1730-12 sku#17302500 HDPE cover: Carson HD1730sku#17304500 Lid shall be traffic rated if required.
1" x 1" Service:	Carson BCF1730-12 sku#17302500 HDPE cover: Carson HD1730sku#17304500 Lid shall be traffic rated if required.
Dual Meters:	Carson BCF1730-12 sku#17302500 HDPE cover: Carson HD1730sku#17304500 Lid shall be traffic rated if required.
1-1/2" and 2":	Carson BCF1730-12 sku# 17302500 HDPE cover: Carson HD1730 sku#17304500 Lid shall be traffic rated if required.

REDUCED PRESSURE BACKFLOW ASSEMBLIES

As approved on the most current List of Approved Backflow Prevention Assemblies published by the Washington State DOH.

DOUBLE CHECK VALVE ASSEMBLIES

As approved on the most current List of Approved Backflow Prevention Assemblies published by the Washington State DOH.

RESILIENT SEATED SHUT-OFF VALVES

All manufacturers that meet the performance requirements specified under the material section of the standards.

PVC PIPE (ASTM D3034) 4" - 15"

All manufacturers that meet the performance requirements specified under the material section of the standards.

PVC PIPE (ASTM F679) 18" - 27"

All manufacturers that meet the performance requirements specified under the material section of the standards.

PVC PIPE (AWWA C900) 4" - 12"

All manufacturers that meet the performance requirements specified under the material section of the standards.

AWWA C900 FITTINGS AND MANHOLE ADAPTERS

Head Manufacturing (Idaho)
Vassallo (Florida)

CONTROLLED DENSITY (FLOWABLE) FILL

Stoneway, CADMAN

RECYCLED CONCRETE (FOR USE AS CRUSHED SURFACING BASE COURSE MATERIAL)

Stoneway Recycling
Renton Recycling (with certification that the material is free of contaminants)

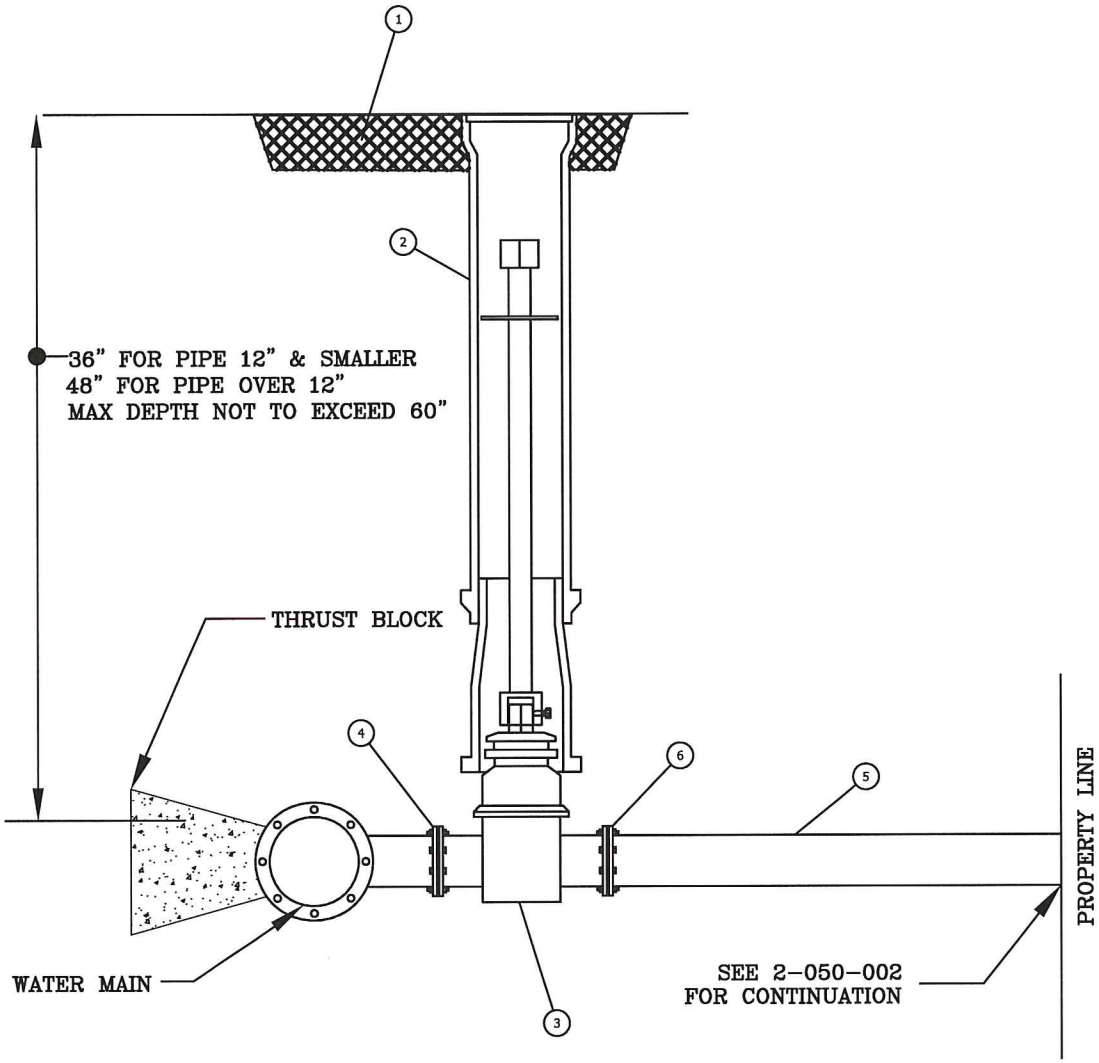

MATERIAL LIST

1. 24"X24"X4" CONCRETE PAD IN UNPAVED AREA.
2. CAST IRON VALVE BOX AND EXTENSION PER STANDARD DETAIL 2-XXX-XXX
3. 6" GATE VALVE WITH RESILIENT SEAT (MUELLER, M&H OR APPROVED EQUAL)
4. MAINLINE SIZE TEE WITH FLANGE
5. 6" D.I.P.
6. MEGALUG

MARYSVILLE CITY ENGINEER

5/15/15
DATE

CITY OF Marysville WASHINGTON

FIRE LINE CONNECTION

STANDARD PLAN 2-050-001

LAST REVISED 05/11/09

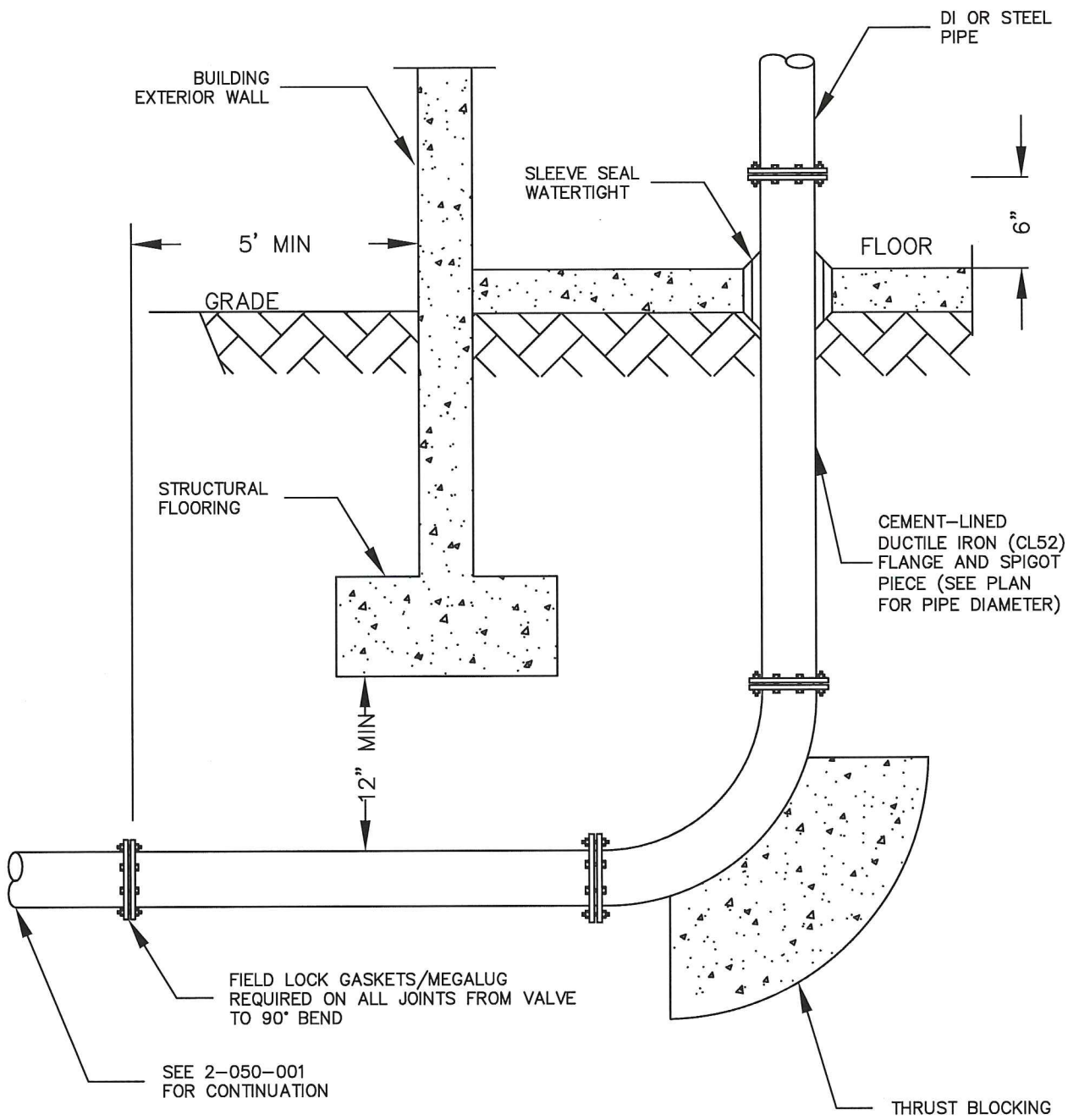

5/15/15

MARYSVILLE CITY ENGINEER DATE

CITY OF Marysville WASHINGTON

FIRE LINE UNDERGROUND FLOOR FLANGE DETAIL

STANDARD PLAN 2-050-002

LAST REVISED 05/12/09

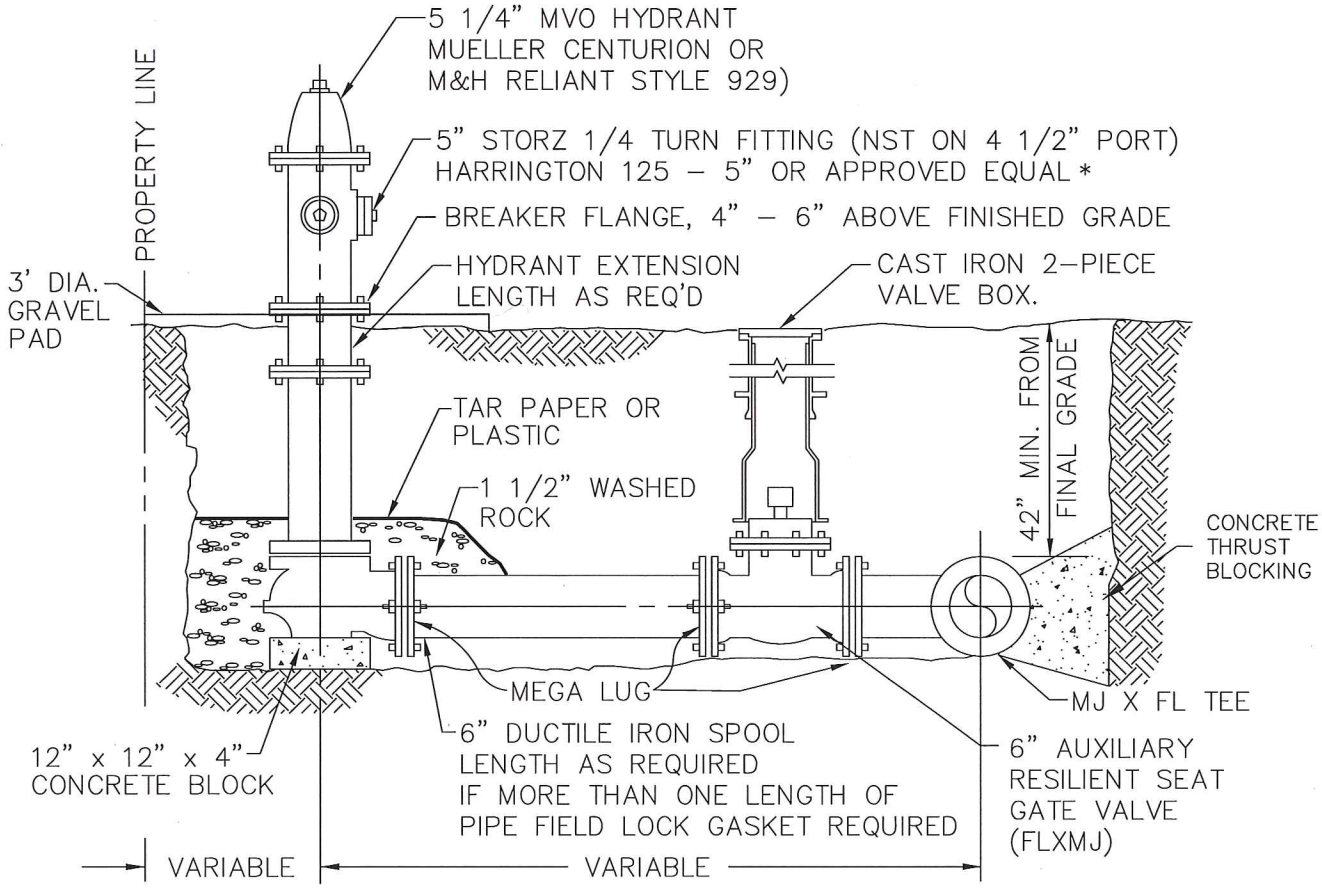

NOTE: PAINT HYDRANT WITH CATERPILLAR YELLOW. BAG HYDRANT UNTIL SYSTEM IS APPROVED. REMOVE ALL CHAINS & CONNECTORS FROM ALL PORTS. NO LOCKING DEVICES ON STORZ FITTINGS.

3' MINIMUM CLEARANCE
AROUND FIRE HYDRANT

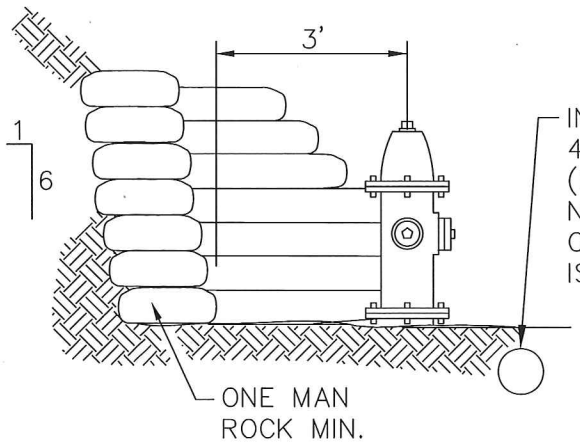

CUT

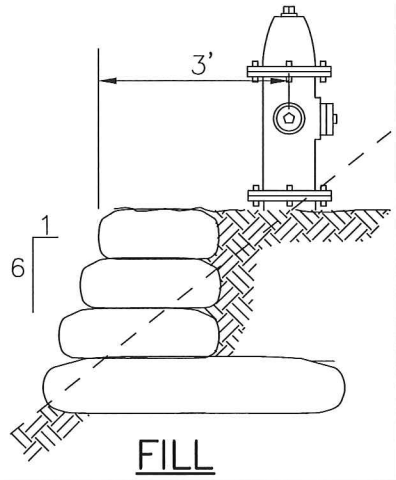

FILL

APPROVED BY

MARYSVILLE CITY ENGINEER

5/9/07
DATE

CITY OF Marysville WASHINGTON

HYDRANT INSTALLATION

LAST REVISED 8/10/01

STANDARD PLAN 2-060-001

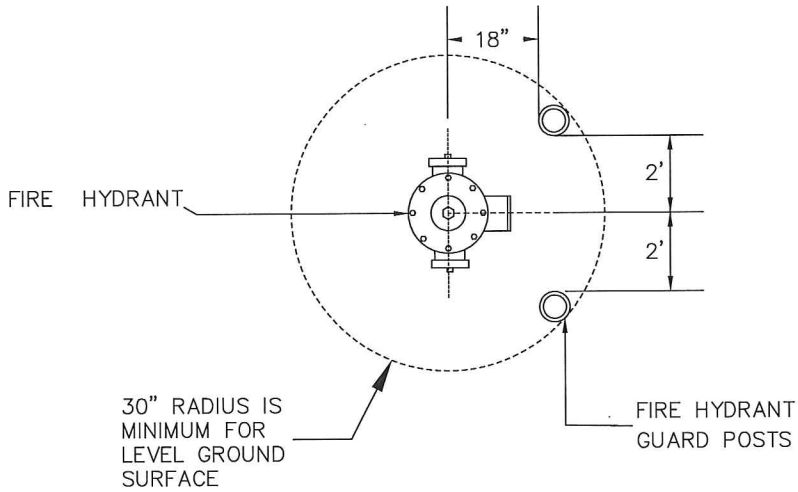

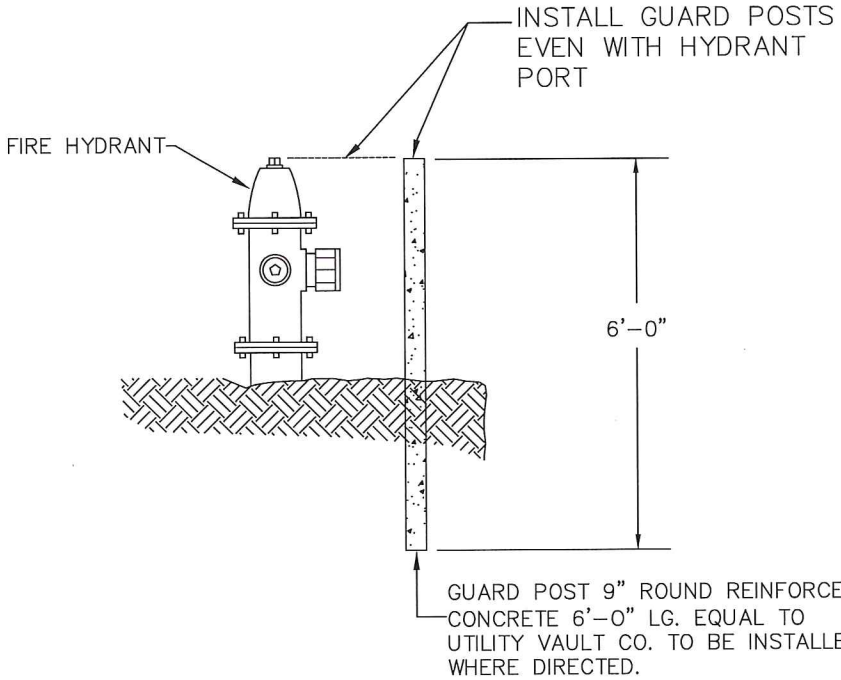

APPROVED BY

MARYSVILLE CITY ENGINEER

5/15/15

DATE

CITY OF Marysville WASHINGTON

FIRE HYDRANT GUARD POST

STANDARD PLAN 2-060-002

LAST REVISED 03/24/15

EXTENSIONS W/ ROCK PLATE ARE REQUIRED WHEN THE VALVE NUT IS MORE THAN 48" INCHES BELOW FINISHED GRADE. EXTENSIONS ARE TO BE A MINIMUM OF ONE (1) FOOT LONG. ONLY ONE EXTENSION TO BE USED PER VALVE. OPERATING NUT TO BE WITHIN 24" OF FINISHED GRADE.

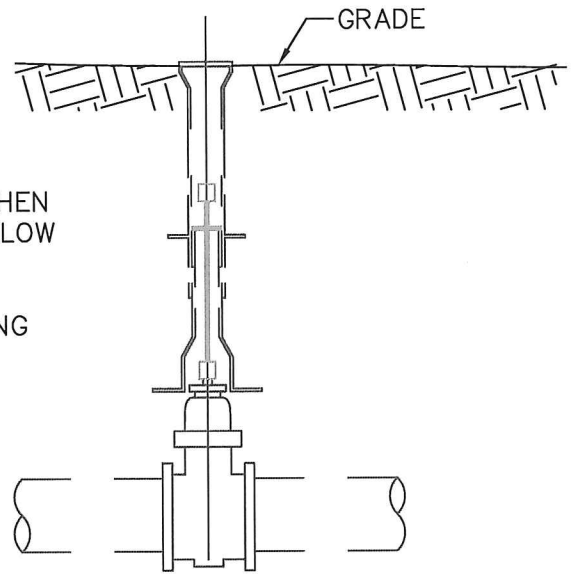

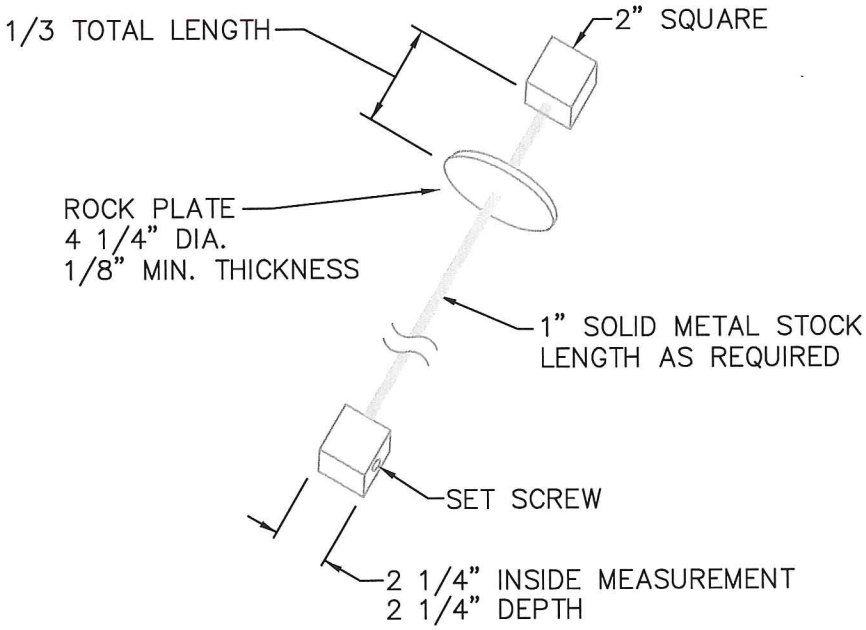

NOTES

1. ALL EXTENSIONS ARE TO BE MADE OF STEEL SIZED AS NOTED.
2. PAINT ENTIRE EXTENSION ASSEMBLY WITH TWO COATS OF CARBON ELASTIC (ATCO #222) OR APPROVED EQUAL.
3. EXTENSION TO BE INSTALLED PRIOR TO SETTING VALVE BOX.

APPROVED BY 5/15/15

MARYSVILLE CITY ENGINEER DATE

VALVE OPERATING NUT EXTENSION DETAIL

CITY OF Marysville WASHINGTON

LAST REVISED 03/24/15

STANDARD PLAN 2-070-001

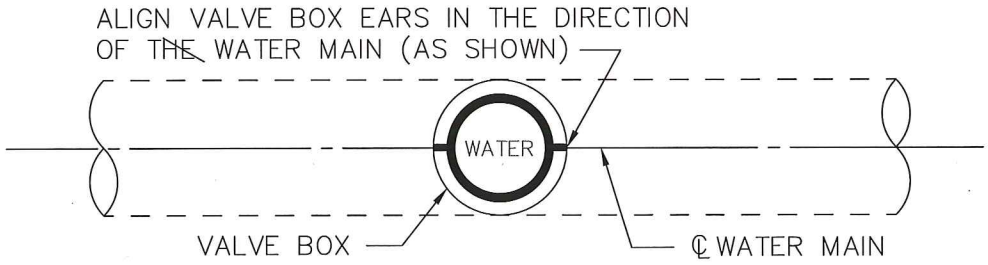

VALVE BOX EAR DETAIL

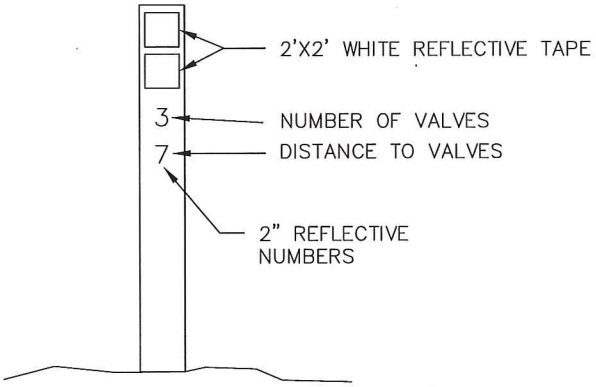

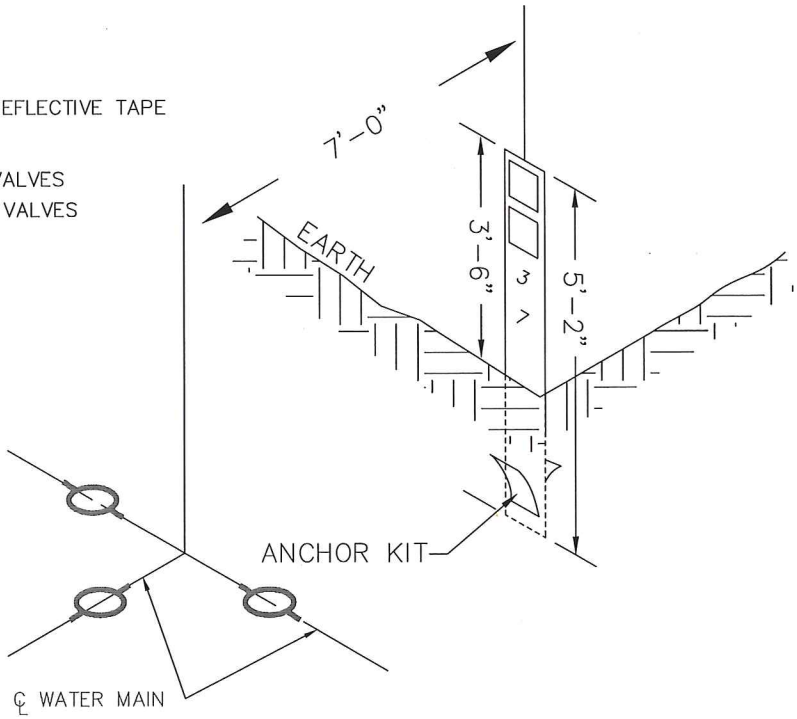

NOTE: VALVE MARKER SHALL BE CARSONITE CUM-375 BLUE WITH 2-ANCHORS (ANCHOR BARB KIT) AT BOTTOM OF MARKER. MARKER SHALL BE SITUATED IN A SAFE AND LOGICAL LOCATION. THE POST SHALL BE SET AT RIGHT ANGLES TO THE ROADWAY FROM THE VALVE. USE APPROPRIATE INSTALLATION TOOLS AND METHODS.

APPROVED BY

MARYSVILLE CITY ENGINEER — DATE 5/9/07

CITY OF Marysville WASHINGTON

VALVE MARKER POST DETAIL

STANDARD PLAN 2-070-002

LAST REVISED 07/20/06

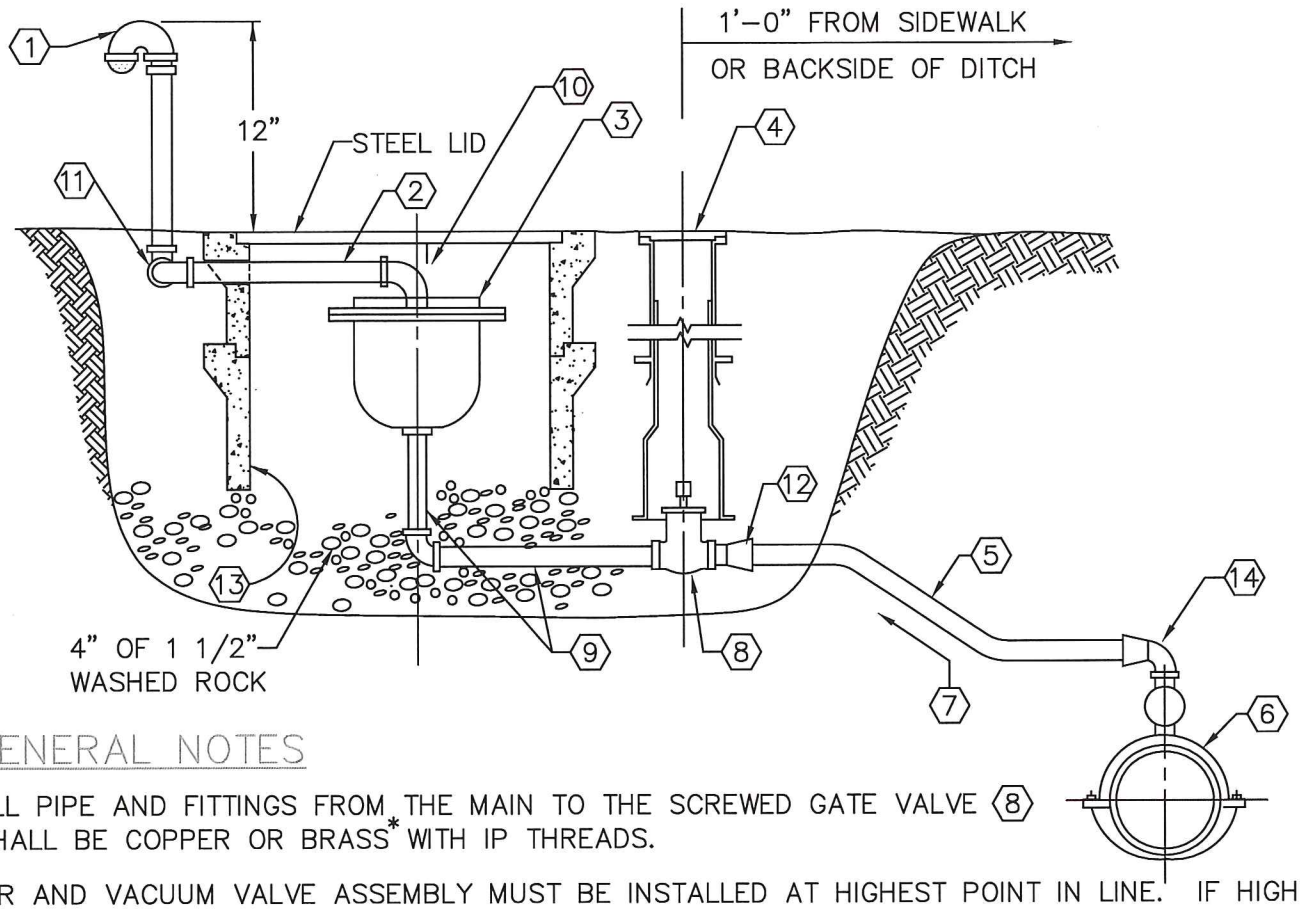

GENERAL NOTES

ALL PIPE AND FITTINGS FROM THE MAIN TO THE SCREWED GATE VALVE ⟨8⟩ SHALL BE COPPER OR BRASS* WITH IP THREADS.

AIR AND VACUUM VALVE ASSEMBLY MUST BE INSTALLED AT HIGHEST POINT IN LINE. IF HIGH POINT FALLS IN LOCATION WHERE ASSEMBLY CANNOT BE INSTALLED, PROVIDE ADDITIONAL DEPTH OF LINE TO CREATE HIGH POINT AT A LOCATION WHERE ASSEMBLY CAN BE INSTALLED.

INSTALL VALVE BOX PERPENDICULAR TO PAVING. INSULATE W/ FIBERGLASS INSULATION TO TOP OF AIR/VACUUM VALVE.

KEYED NOTES

⟨1⟩ 2" BRONZE BEEHIVE STRAINER, 2" RETURN BEND, PAINTED SAFETY YELLOW
⟨2⟩ EXTEND 2" PIPE HORIZONTALLY THROUGH BACK OF BOX
⟨3⟩ 2" AIR RELEASE OR COMBINATION AIR/VACUUM VALVE, APCO 145C OR EQUAL.
⟨4⟩ CAST IRON 2 PIECE VALVE BOX W/ LID & LIFTING HANDLE, SEATTLE STYLE 045
⟨5⟩ 2" TYPE K SOFT COPPER TUBING
⟨6⟩ 2" DOUBLE STRAP SADDLE WITH IP BALL CORP STOP
⟨7⟩ MAINTAIN POSITIVE SLOPE FROM MAIN TO AIR RELEASE VALVE
⟨8⟩ 2" MUELLER 110 OR FORD QUICK JOINT BALL VALVE CURB STOP
⟨9⟩ 2" BRASS PIPE WITH 90° ELBOW AND SHORT NIPPLE
⟨10⟩ 2" 90° BEND & STREET ELL
⟨11⟩ 2" 90° BEND, 2" CLOSE NIPPLE & 2" 90° BEND
⟨12⟩ 2" MIPTx110 COMPRESSION COUPLING
⟨13⟩ 2-#2 FOGTITE CONCRETE BOXES W/ ONE STEEL TRAFFIC BEARING LID
⟨14⟩ 90° 2" ELL, BRASS - FIPTx110 COMPRESSION COUPLING

APPROVED BY

MARYSVILLE CITY ENGINEER — DATE 5/15/15

CITY OF Marysville WASHINGTON

2" AIR RELEASE OR COMBINATION AIR/ VACUUM VALVE

LAST REVISED 03/24/15

STANDARD PLAN 2-070-003

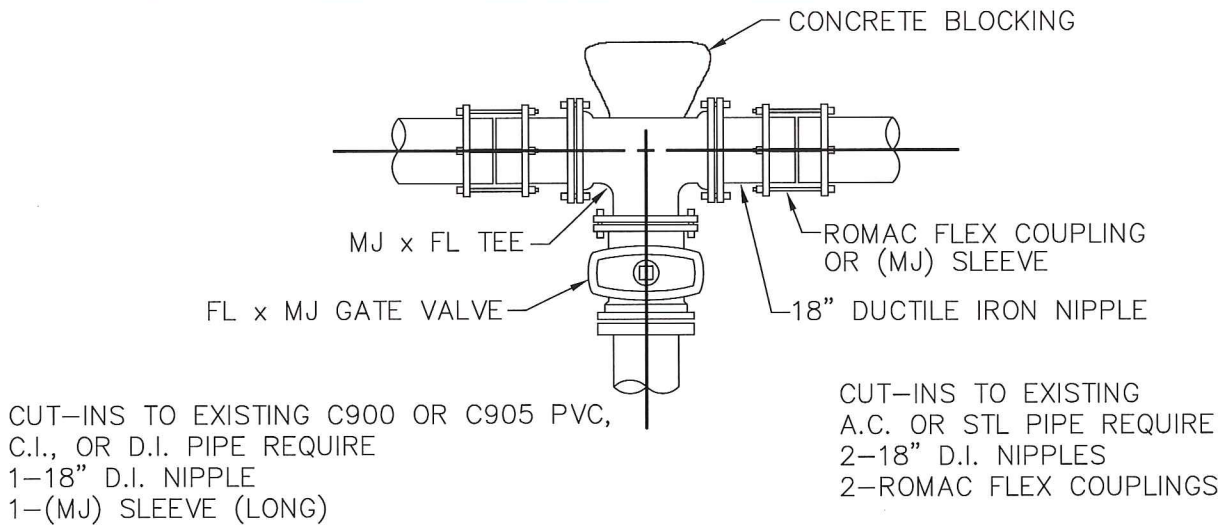

CUT-IN TO MAINS

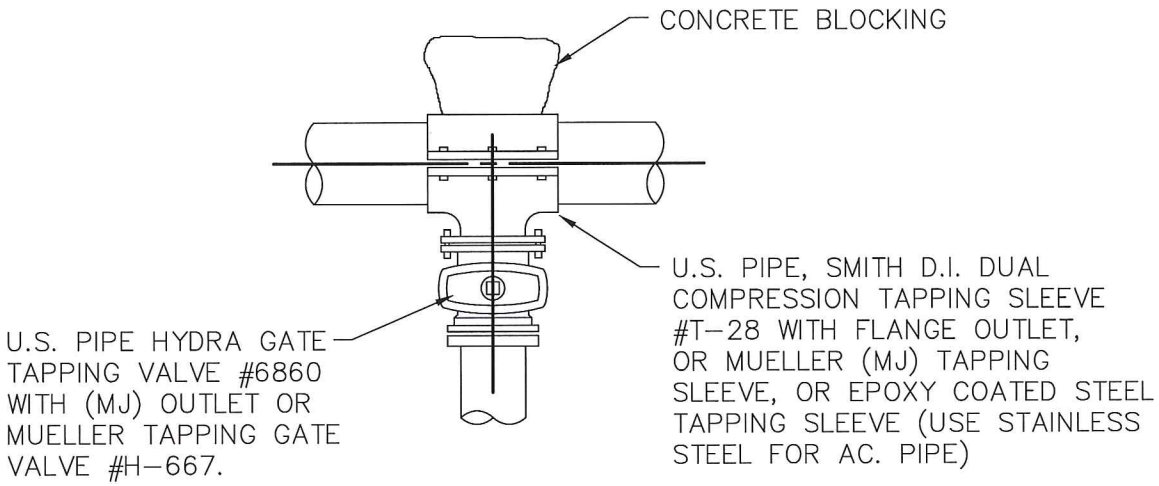

WET TAP MAINS

NOTE:

ALL CONNECTIONS TO EXISTING MAINS WILL BE MADE WITH CITY OF MARYSVILLE PERSONNEL PRESENT.

ALL FITTINGS TO BE SWABBED W/CL2 SOLUTION (50 PPM)

STEEL PIPES SHALL BE RECOATED WHERE WRAPPING HAS BEEN DISTURBED.

SIZE ON SIZE REQUIRES MJ TAPPING TEE

APPROVED BY

MARYSVILLE CITY ENGINEER

5/15/15
DATE

CITY OF Marysville WASHINGTON

CUT-INS AND LIVE TAPS

STANDARD PLAN 2-070-004

LAST REVISED 05/12/09

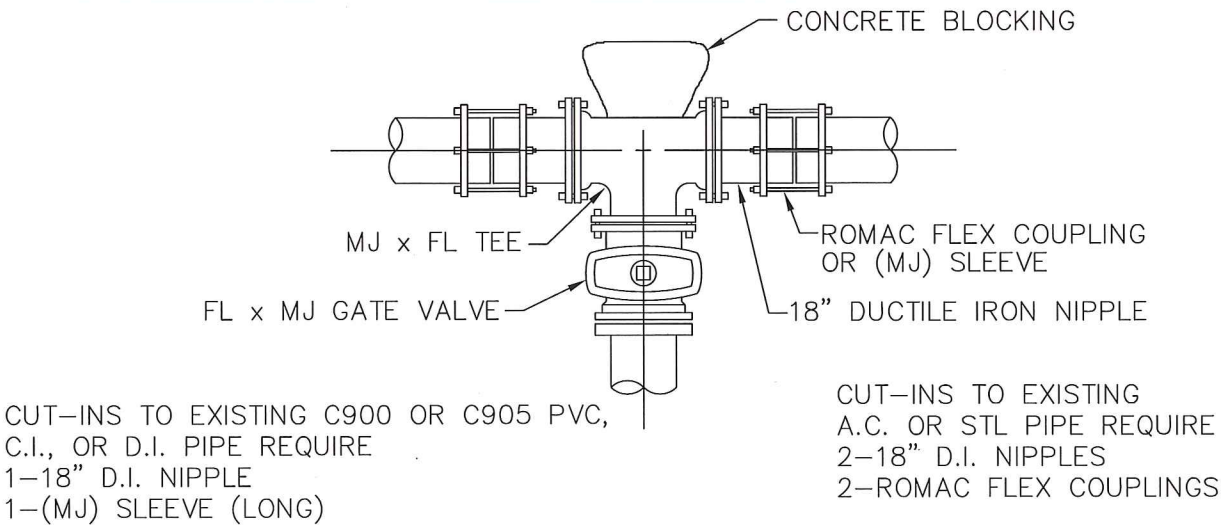

CUT-IN TO MAINS 8" AND SMALLER

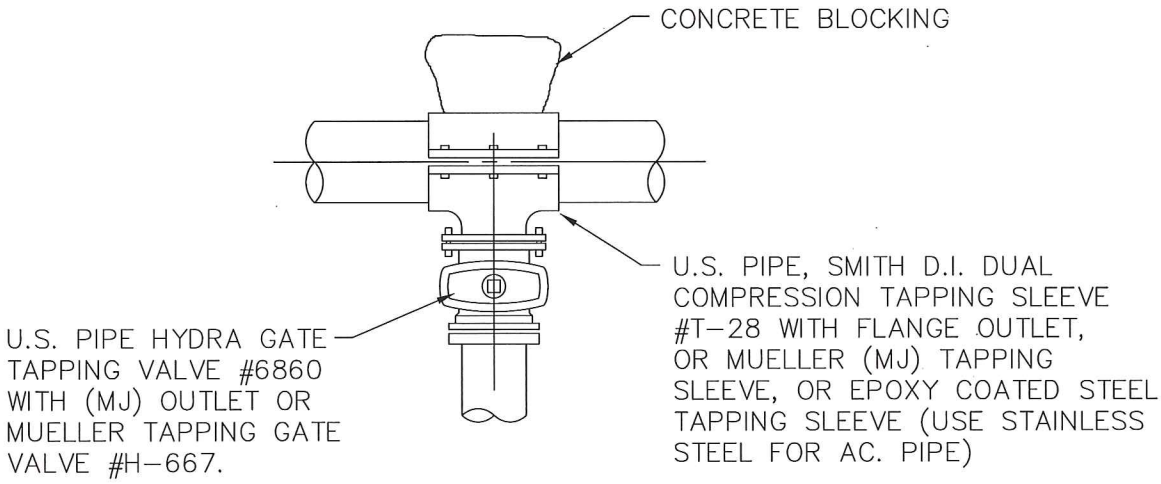

WET TAP MAINS 10" AND LARGER

NOTE:

ALL CONNECTIONS TO EXISTING MAINS WILL BE MADE WITH CITY OF MARYSVILLE PERSONNEL PRESENT.

ALL FITTINGS TO BE SWABBED W/CL2 SOLUTION (50 PPM)

STEEL PIPES SHALL BE RECOATED WHERE WRAPPING HAS BEEN DISTURBED.

SIZE ON SIZE REQUIRES CAST IRON MJ SLEEVE

APPROVED BY

MARYSVILLE CITY ENGINEER — DATE 5/9/07

CITY OF Marysville WASHINGTON

CUT-INS AND LIVE TAPS

LAST REVISED 10/16/01

STANDARD PLAN 2-070-004

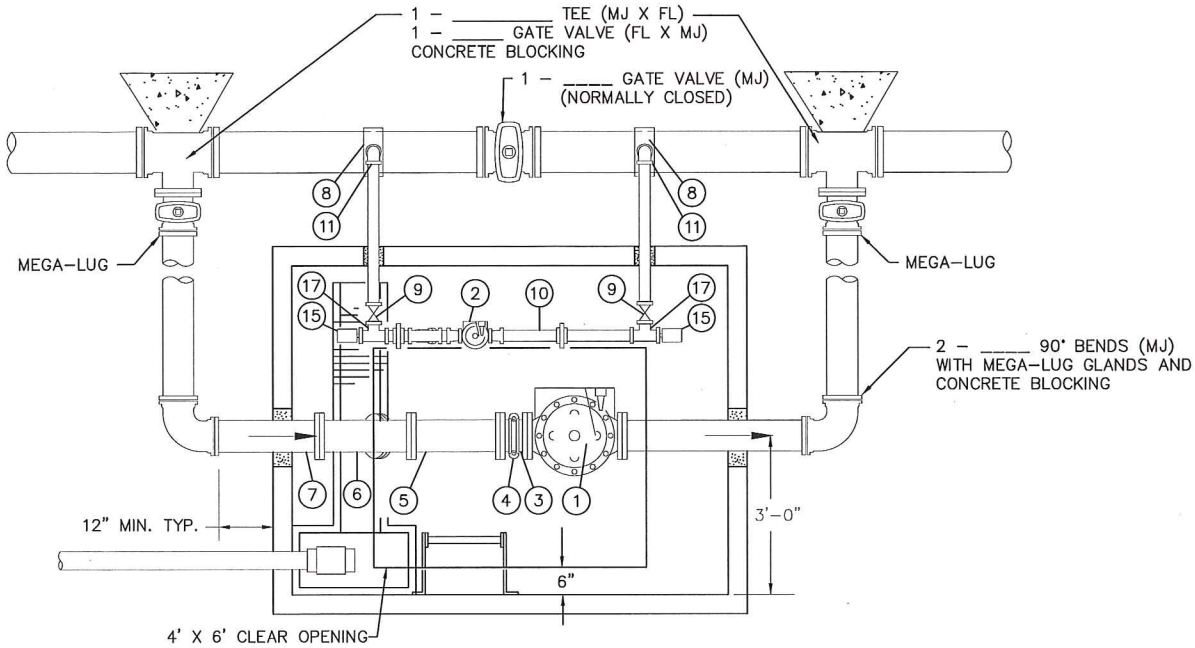

PLAN

NTS

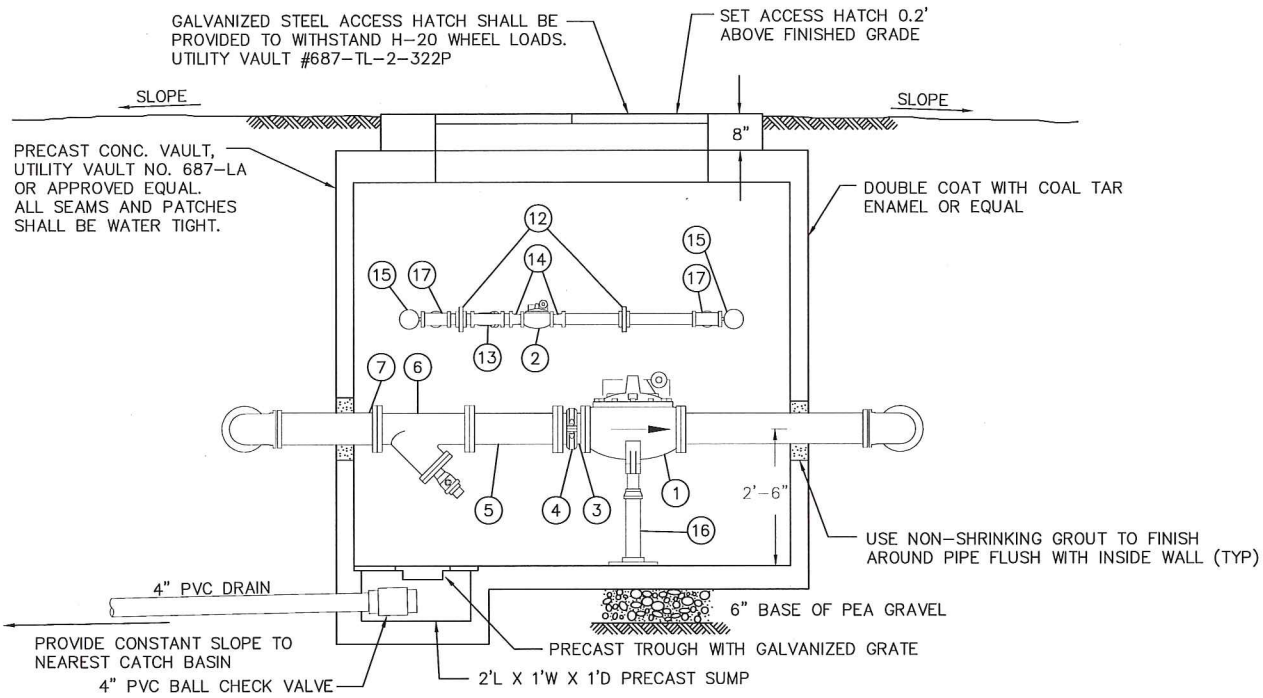

ELEVATION

NTS

APPROVED BY

MARYSVILLE CITY ENGINEER

5/9/07

DATE

CITY OF Marysville WASHINGTON

PRESSURE REDUCING STATION

LAST REVISED 07/13/06

STANDARD PLAN 2–080–001

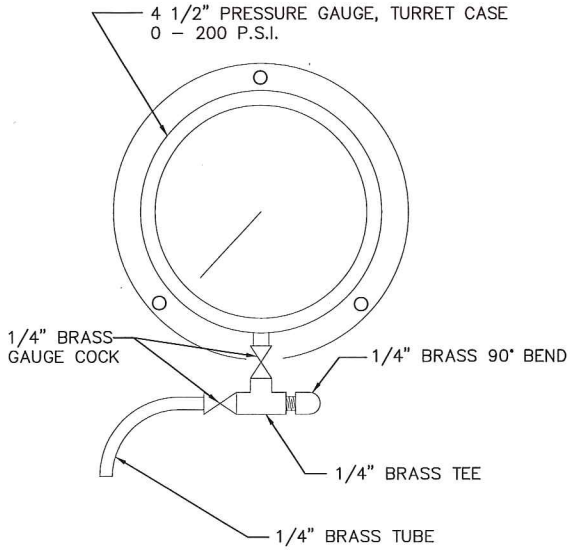

DRILL AND TAP A 1/4" HOLE IN ___ D.I. PIPE FOR INSTALLATION.

GAUGE ASSEMBLY

N.T.S.

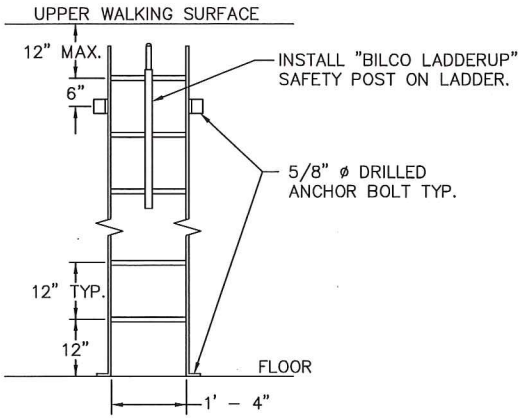

LADDER AND MOUNTING BOLTS SHALL BE CONSTRUCTED OF HOT DIPPED GALVANIZED STEEL.

LADDER DETAIL

N.T.S.

MATERIALS LIST

1. ____ PRESSURE REDUCING VALVE (CLAYTON 90G–01 ABCSY)
2. ____ PRESSURE REDUCING VALVE (CLAYTON 90G–01 ABCS)
3. 8" OF __" D.I. (FL X GROOVE)
4. VICTUALIC COUPLING OR EQUAL
5. 16" OF ____ D.I. (FL)
6. ____ WYE STRAINER (FL), 1/8" DIAM. SCREEN, WITH 2" CORP STOP ON DRAIN
7. ____ D.I PIPE (FL X PE)
8. ____ I.P. SERVICE SADDLE WITH DOUBLE STAINLESS STEEL STRAPS
9. ____ BRASS GATE VALVE
10. ____ PIPE
11. ____ 90° BEND
12. ____ UNION
13. ____ WYE STRAINER WITH 20 MESH SCREEN
14. _____ REDUCER
15. ___ 1/4" GAUGE COCK AND PRESSURE GAUGE
16. ADJUSTABLE PIPE SUPPORT
17. ___ TEE

ALL PIPE AND FITTINGS 3" DIA. AND SMALLER SHALL BE GALVANIZED UNLESS NOTED OTHERWISE.

PRV DESCRIPTIONS

1. PRESSURE REDUCING VALVE

A) ____ GLOBE
B) FLANGED
C) CLASS 125
D) APPROXAMATE DOWNSTREAM PRESSURE SETTING – __ P.S.I.
E) WYE STRAINER ON PILOT LINE
F) FLOW CLOSING SPEED CONTROL
G) VALVE POSITION INDICATOR
H) STAINLESS STEEL TRIM ON MAIN AND PILOT VALVE

2. PRESSURE REDUCING VALVE

A) _____ GLOBE
B) THREADED
C) CLASS 125
D) APPROXIMATE DOWNSTREAM PRESSURE SETTING – __ P.S.I.
E) WYE STRAINER ON PILOT LINE
F) FLOW OPENING SPEED CONTROL
G) VALVE POSITION INDICATOR
H) STAINLESS STEEL TRIM ON MAIN AND PILOT VALVE

APPROVED BY

MARYSVILLE CITY ENGINEER — DATE 5/9/07

CITY OF Marysville WASHINGTON

PRESSURE REDUCING STATION NOTES

STANDARD PLAN 2–080–002

LAST REVISED 10/16/01

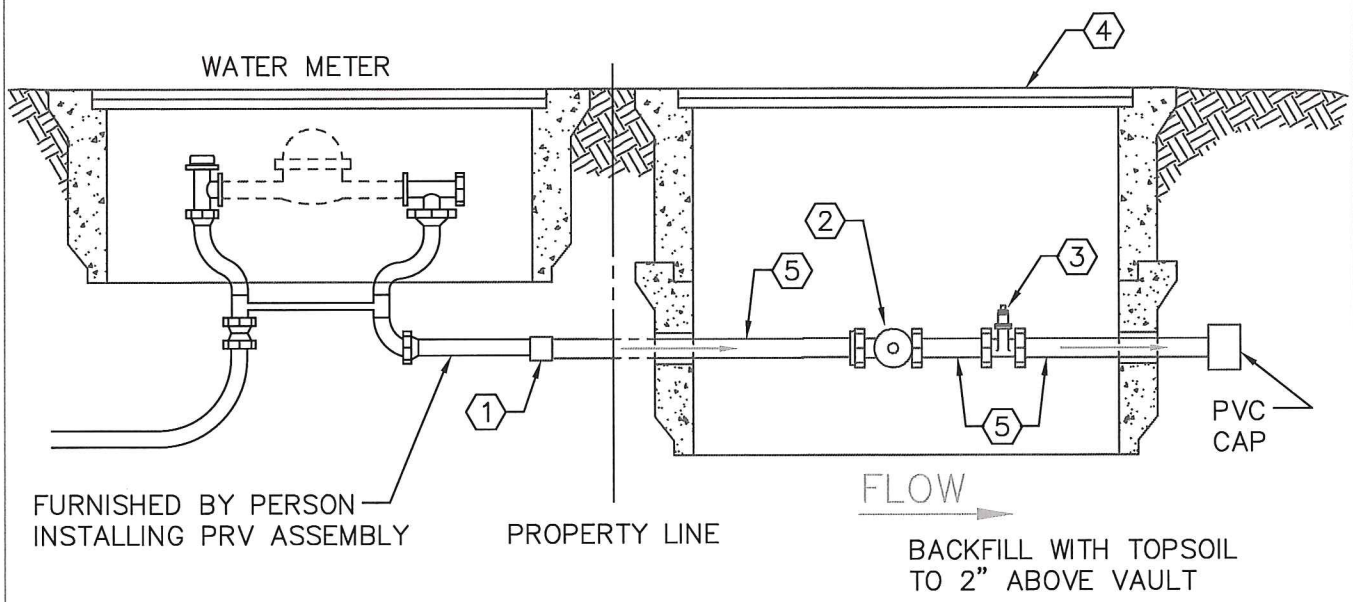

KEYED NOTES FOR PRV

1. 3/4" COMBINATION TAIL PIECE END CONNECTION
2. PRESSURE REDUCING VALVE W/ STRAINER – 3/4" WITH UNION COUPLING ON THE INLET; EQUAL TO: WILKINS #600, WATTS #U5B. INSTALL SIDEWAYS TO ALLOW ACCESS TO STRAINER AND ADJUSTING SCREW.
3. 3/4" BRASS GATE VALVE
4. CARSON BCF1118–12 SKU #11182500 (OR APPROVED EQUAL)
5. 3/4" BRASS PIPE

INSTALLATION

THE PRESSURE REDUCING VALVE SHALL BE LOCATED "DOWNSTREAM" OF THE METER. RESPONSIBILITY FOR PROPER INSTALLATION, AND OPERATION OF THE VALVE SHALL BE THAT OF THE CONTRACTOR.

APPROVED BY

MARYSVILLE CITY ENGINEER

5/15/15
DATE

CITY OF Marysville WASHINGTON

5/8"x3/4" SINGLE METER SERVICE WITH PRESSURE REDUCING VALVE

LAST REVISED 03/24/15

STANDARD PLAN 2–080–003

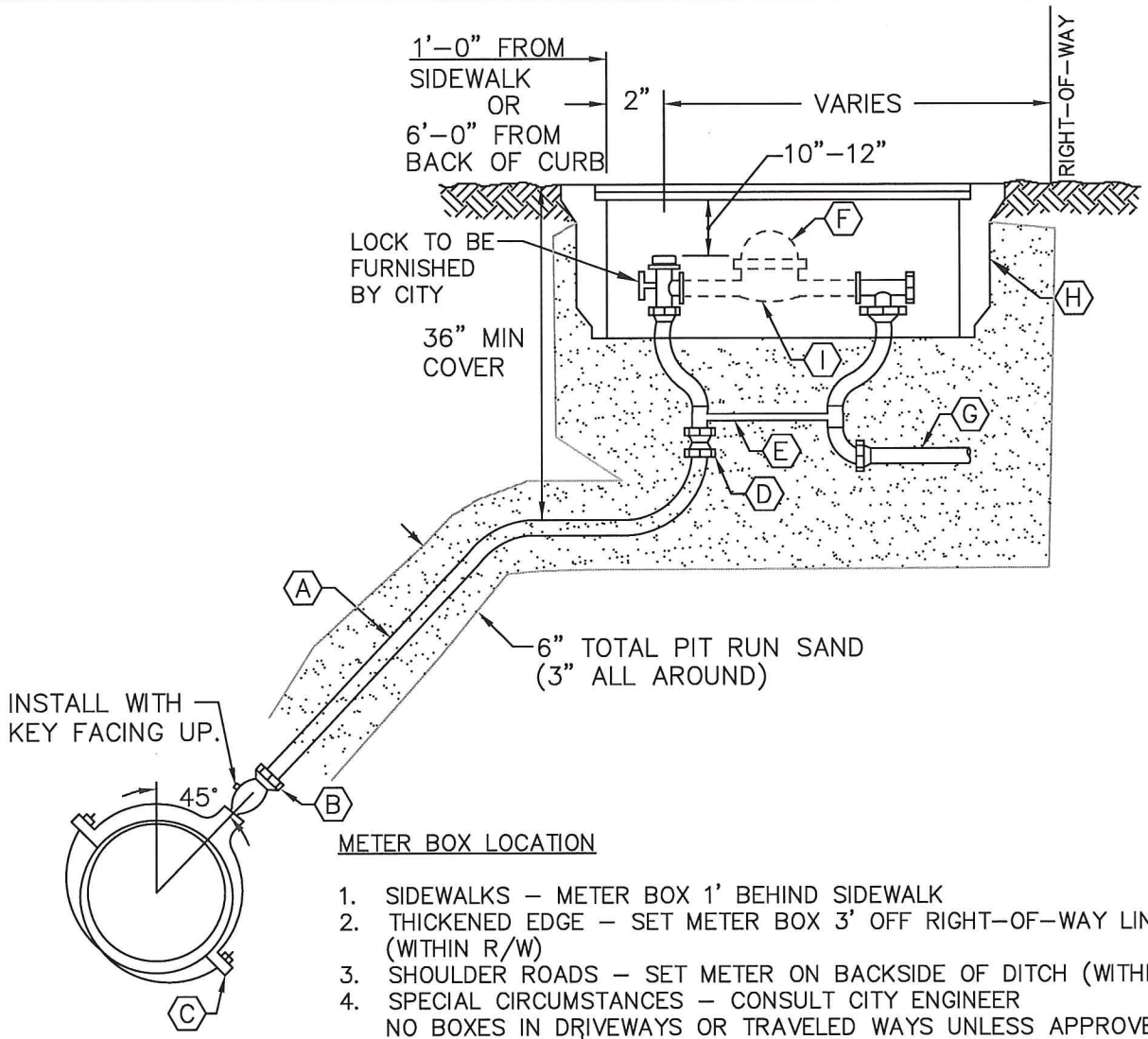

METER BOX LOCATION

1. SIDEWALKS – METER BOX 1' BEHIND SIDEWALK
2. THICKENED EDGE – SET METER BOX 3' OFF RIGHT-OF-WAY LINE (WITHIN R/W)
3. SHOULDER ROADS – SET METER ON BACKSIDE OF DITCH (WITHIN R/W)
4. SPECIAL CIRCUMSTANCES – CONSULT CITY ENGINEER
   NO BOXES IN DRIVEWAYS OR TRAVELED WAYS UNLESS APPROVED BY CITY ENGINEER.
5. CURB NO SIDEWALK – 6' BEHIND BACK OF CURB (WITHIN R/W)
6. SET METER PERPENDICULAR TO PAVING

NOTE: SERVICE LOCATION SHALL BE DETERMINED SIMULTANEOUSLY W/ OTHER UTILITIES SO THAT CONFLICTS ARE NOT ENCOUNTERED.

KEYED NOTES

A 1" TYPE K COPPER CUT TO FIT ONE CONTINUOUS LENGTH.
B 1" AWWA THREAD X MUELLER 110 (OR FORD QUICK JOINT) BALL CORPORATION STOP
C 1" SERVICE SADDLE WITH DOUBLE STAINLESS STEEL STRAPS EQUAL TO ROMAC FOR AC PIPE. DIRECT TAP FOR ALL OTHER TYPES OF PIPE.
D 1"x3/4" REDUCER MUELLER 110 OR APPROVED EQUAL
E METER SETTER W/CHECK, MUELLER B24104 OR EQUAL.
F METER TO BE INSTALLED BY CITY
G OWNER CONNECTS TO FEMALE OR MALE IPT
H CARSON BCF 1118-12 SKU #111824500
HDPE LID: CARSON HD1118
SKU #11184500:
I CONTRACTOR TO FURNISH PVC SPACER OF CORRECT LENGTH FOR SETTER.

APPROVED BY 5/15/15
MARYSVILLE CITY ENGINEER DATE

5/8" X 3/4", & 1"
METER SERVICE

CITY OF Marysville WASHINGTON

LAST REVISED 03/24/15

STANDARD PLAN 2-090-001

THE WATER MAIN IS LOCATED 6' FROM THE CENTERLINE OF THE ROAD ON THE NORTH OR EAST SIDES

ENVIRONMENT	5/8" DOUBLE METER BOX
TO BE USED IN ALL APPLICATIONS	CARSON BCF1527-18XL SKU#15272002 WITH POLYMER/CONCRETE LID AND LARGE POLYMER/CONCRETE READER LID: CARSON PC1527R SKU#15274018. LID SHALL BE TRAFFIC RATED IF REQUIRED.

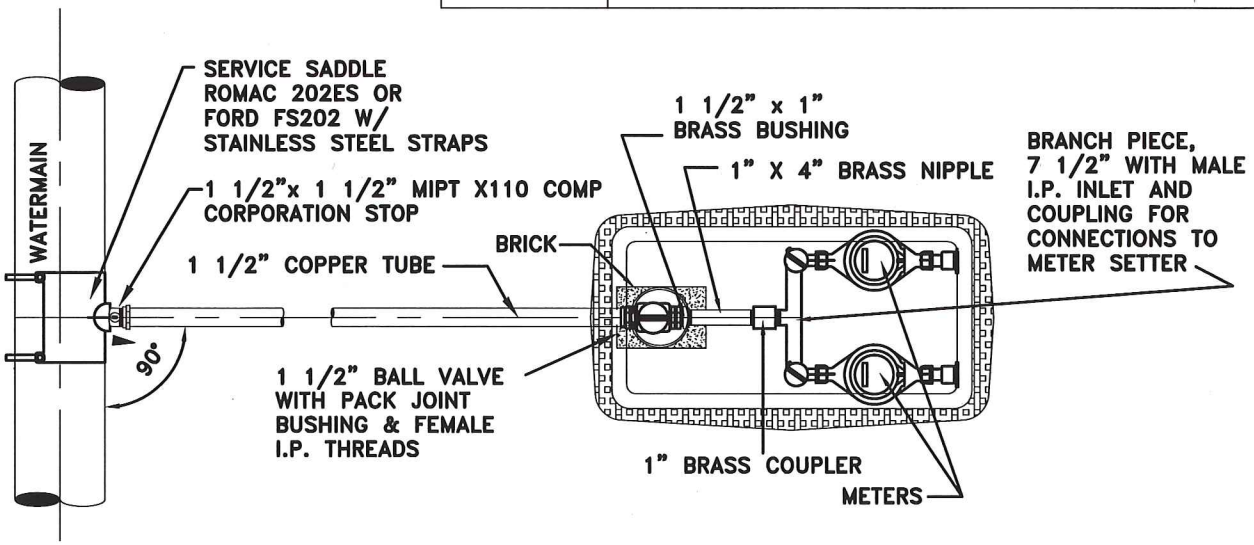

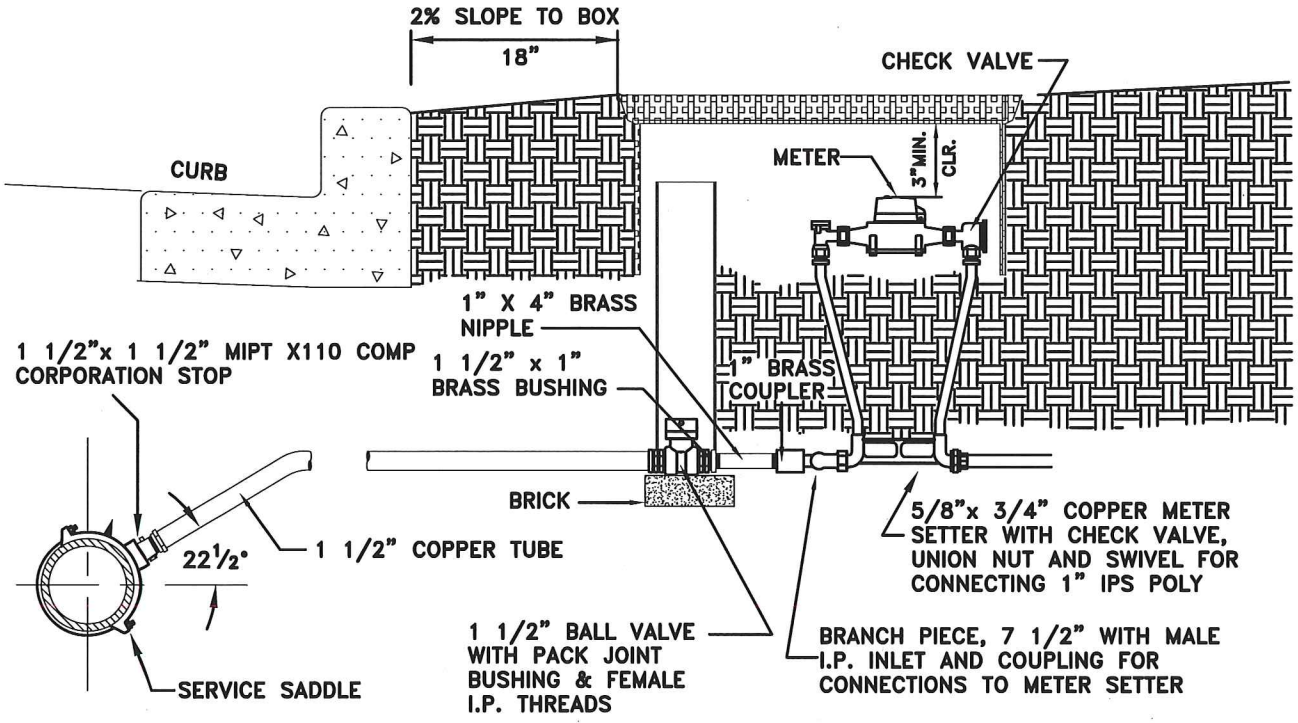

GENERAL NOTES:

1. ALL SERVICE SADDLES SHALL HAVE RUBBER GASKET AND I.P. THREADS.
2. METER SETTERS: FORD VH 72-15W, AYMCDONALD 20-215WCDD44 OR MUELLER B2404-2X12.
3. BALL VALVE: FORD B61-666G, AYMCDONALD M6102-33 OR MUELLER E25171.
4. BRANCH PIECE: FORD U-88-43, AYMCDONALD 08UMM OR MUELLER H15364.

APPROVED BY

MARYSVILLE CITY ENGINEER — DATE 5/9/07

CITY OF Marysville WASHINGTON

5/8" DOUBLE METER SERVICE

STANDARD PLAN 2-090-001A

2-090-001A

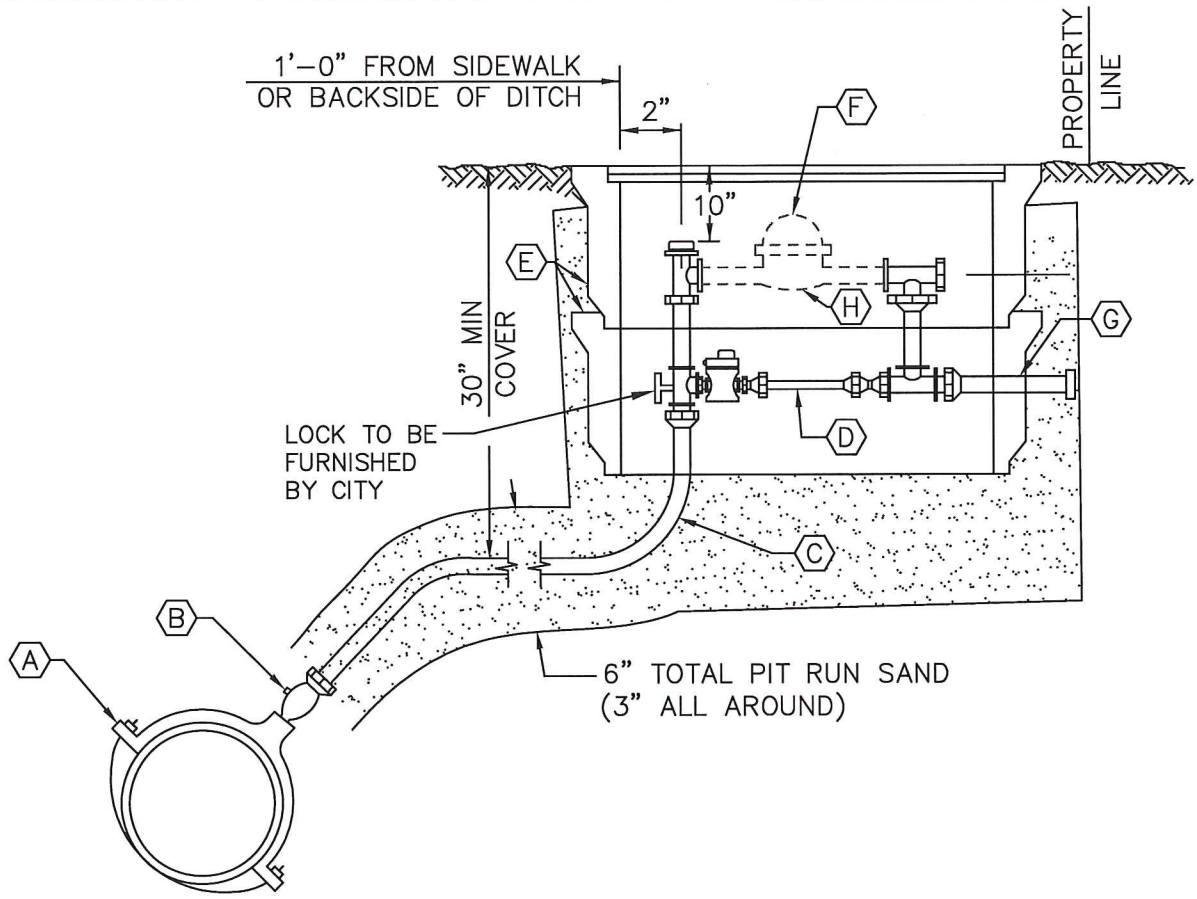

(A) 1 1/2" OR 2" I.P. SERVICE SADDLE W/ DI DOUBLE STRAPS EQUAL TO ROMAC OR SMITH BLAIR. (STAINLESS DOUBLE STRAP FOR AC PIPE).

(B) 1 1/2" OR 2" I.P.Tx110 BALL VALVE CORPORATION STOP. FOR TYPE K COPPER SERVICE EQUAL TO MUELLER, FORD BALLCORP, INSTALLED @ A 45° ANGLE WITH KEY FACING UP.

(C) 1 1/2" OR 2" K COPPER OR 250 PSI CTS POLY HARD DRAWN OR COIL. CUT TO FIT, ONE CONTINUOUS LENGTH WITH TRACER WIRE ATTACHED TO SADDLE WITH EXTRA NUT.

(D) METER SETTER W/ BYPASS, MUELLER, FORD, OR APPROVED EQUAL. SPACE BETWEEN ANGLE STOP AND CHECK ANGLE SHALL BE 13 1/2" FOR 1 1/2" SERVICE OR 17 1/2" FOR 2" SERVICE. SETTER SHALL HAVE THE FOLLOWING FEATURES:

PADLOCK WINGS ON KEY VALVE
ANGLE CHECK ON METER OUTLET
IRON PIPE CONNECTIONS ON SETTER INLET AND OUTLET
COMPRESSION ADAPTOR ON SETTER INLET
1" BY-PASS W/PADLOCK WINGS ON CURB STOP

(E) CARSON BCF 1730-12 SKU #17302500
HDPE LID: CARSON HD1750 SKU #17304500.

(F) METER IS TO BE INSTALLED BY CITY.

(G) 1 1/2" OR 2" DIA 15" LONG BRASS OR COPPER NIPPLE W/ PVC CAP.

(H) SPACER TO BE FURNISHED BY THE CITY AND INSTALLED BY THE CONTRACTOR

SIZE METER	LENGTH
1 1/2"	13 1/4"
2"	17 1/4"

NO GASKETS TO BE INSTALLED WITH SPACERS

APPROVED BY 5/15/15
MARYSVILLE CITY ENGINEER DATE

CITY OF Marysville WASHINGTON

1 1/2" AND 2" SINGLE SERVICES

LAST REVISED 03/24/15

STANDARD PLAN 2-090-002

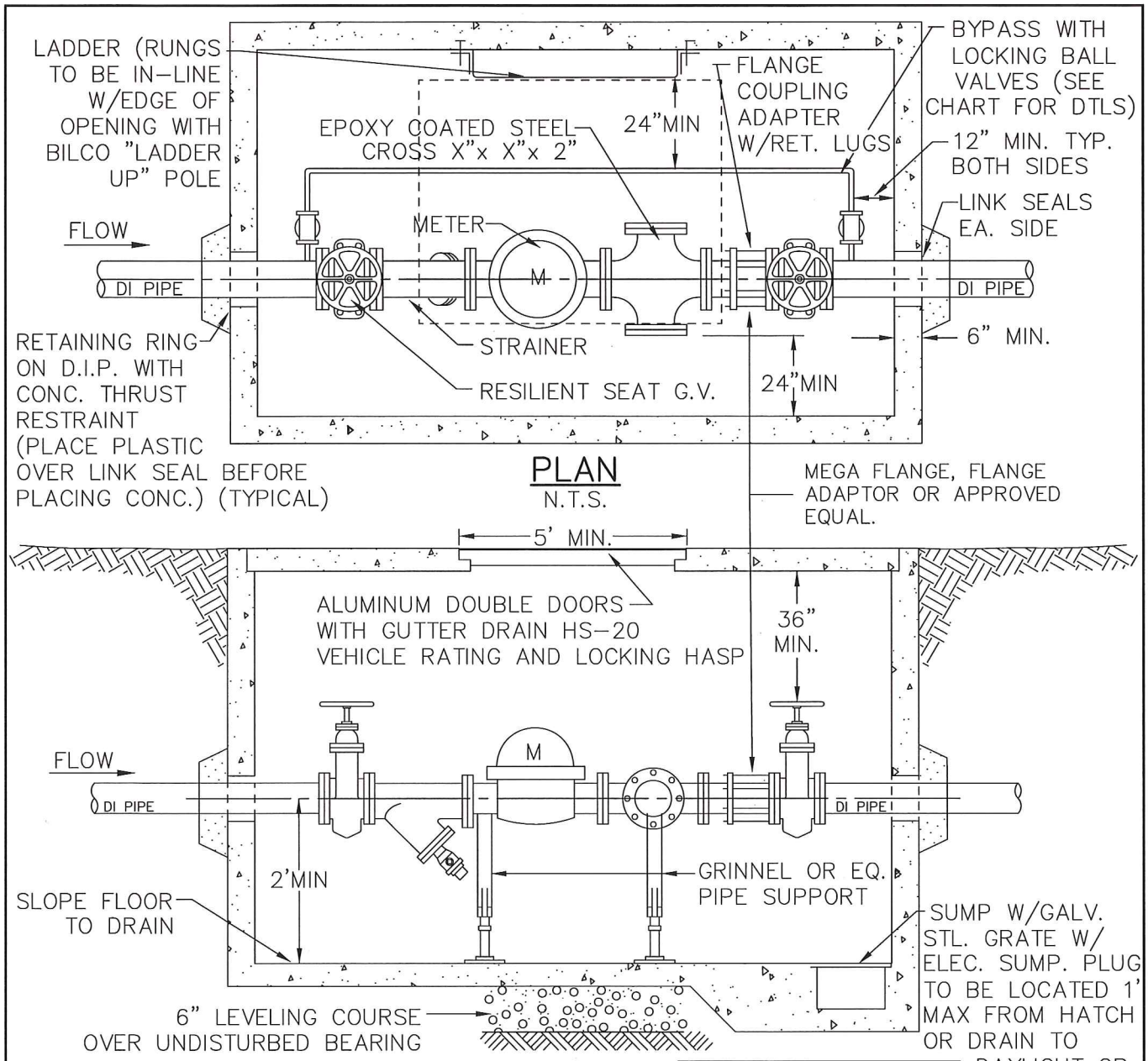

PLAN
N.T.S.

SECTION
N.T.S.

METER SIZE	RECOMMENDED BYPASS SIZE
3	1 1/2" COPPER
4	1 1/2" COPPER
6	2" COPPER
8	4" D.I.P.

NOTES:

1. COVER SHALL EXTEND 6" ABOVE GRADE WHEN VAULT IS NOT IN TRAFFIC AREA AND SHALL BE FLUSH IN TRAFFIC AREA.
2. SLOPE PAVEMENT AWAY FROM VAULT WHEN VAULT IS IN TRAFFIC AREA.
3. VAULT TO BE RATED FOR HIGHWAY USE (HS-20 VEHICLE RATING MINIMUM).
4. DOUBLE DETECTOR CHECK VALVE ASSEMBLY MUST BE INSTALLED BETWEEN METER AND POINT OF USE (BUILDING).
5. ALL BYPASSES SMALLER THAN 4" SHALL BE SADDLED.

APPROVED BY

MARYSVILLE CITY ENGINEER — DATE 5/9/07

CITY OF Marysville WASHINGTON

METER VAULT ASSEMBLY (METERS 2" & LARGER)

LAST REVISED 10/16/01

STANDARD PLAN 2-090-004

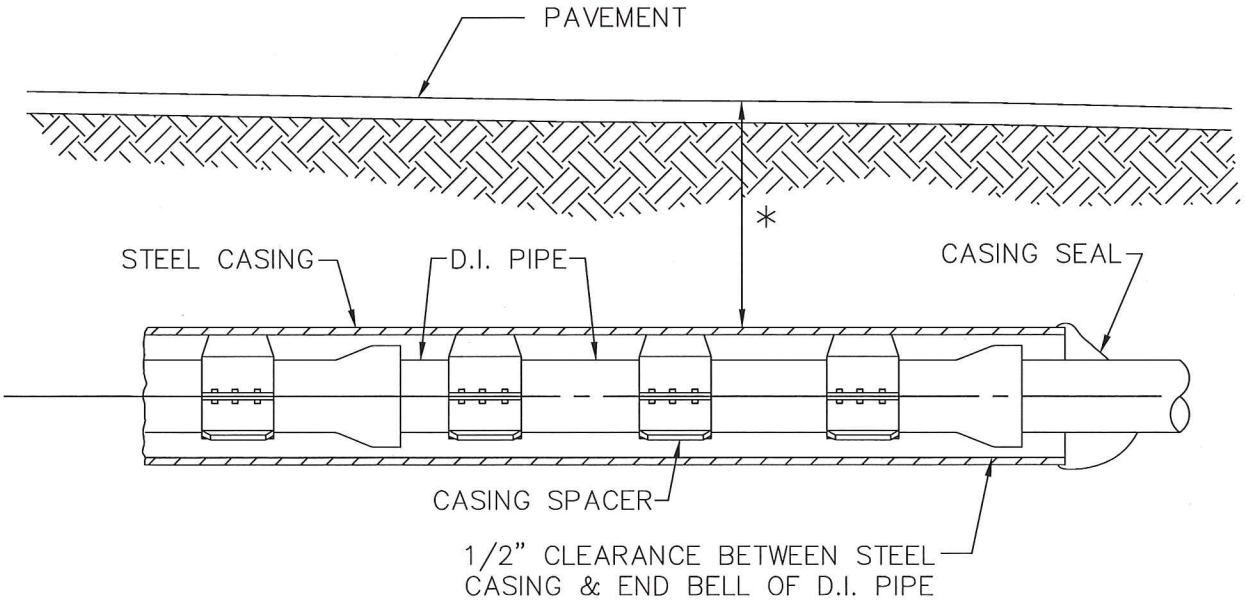

* DEPTH PER APPLICABLE COUNTY/STATE REQUIREMENTS

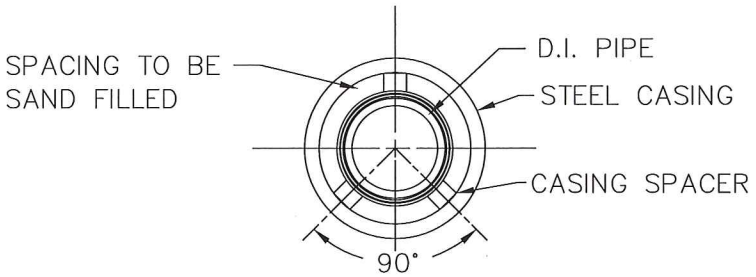

NOTES:

CASING

SIZE AND MINIMUM THICKNESS OF CASING SHALL BE AS SHOWN ON THE CONTRACT DRAWINGS. HOWEVER, THE CONTRACTOR SHALL BE RESPONSIBLE FOR SELECTING THE THICKNESS CONSISTENT WITH HIS OPERATION.

CASING SEAL

MINIMUM 3/16" THICK, SHEET TYPE SYNTHETIC RUBBER WITH STAINLESS STEEL BANDS.

APPROVED BY

MARYSVILLE CITY ENGINEER — DATE 5/9/07

CITY OF Marysville WASHINGTON

PIPE CASING

LAST REVISED 10/16/01

STANDARD PLAN 2-100-001

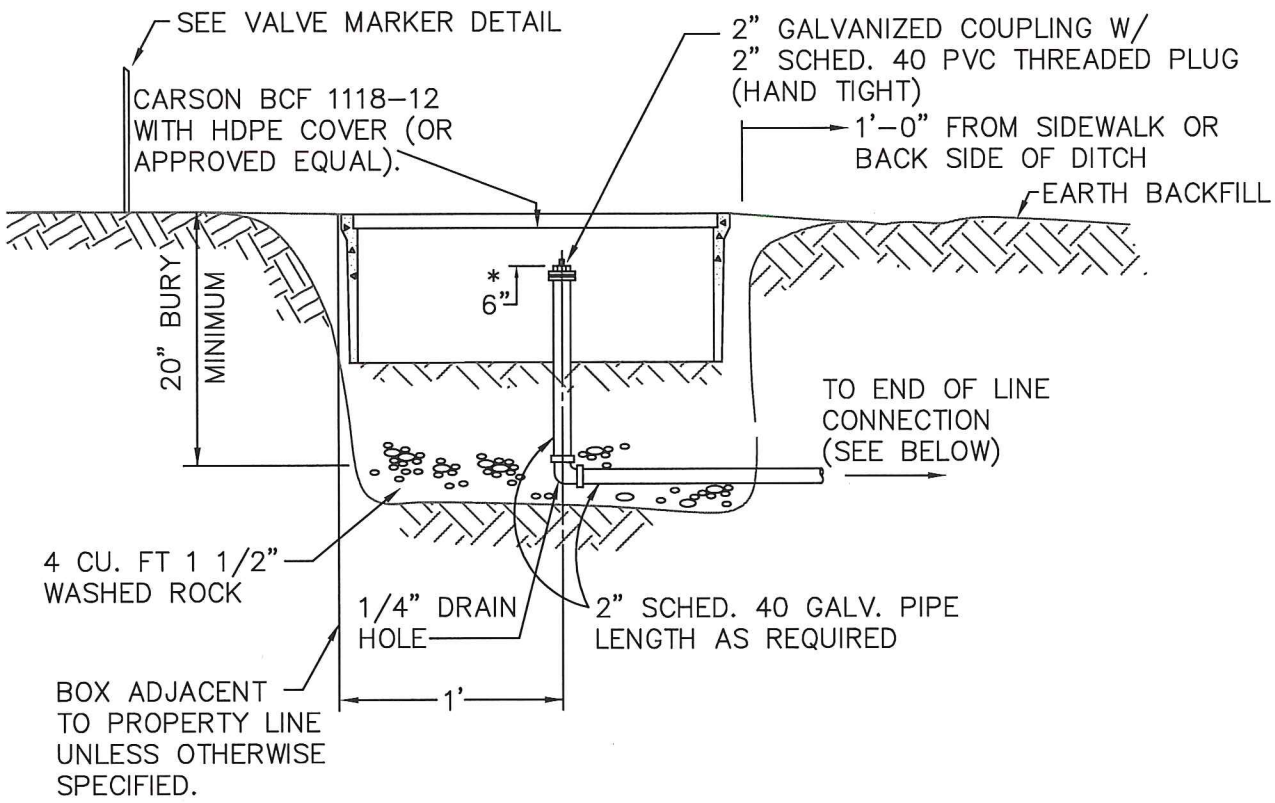

NOTES:
ALL PIPE AND FITTINGS FROM THE MAIN TO THE GATE VALVE SHALL BE BRASS W/ I.P. THREAD.

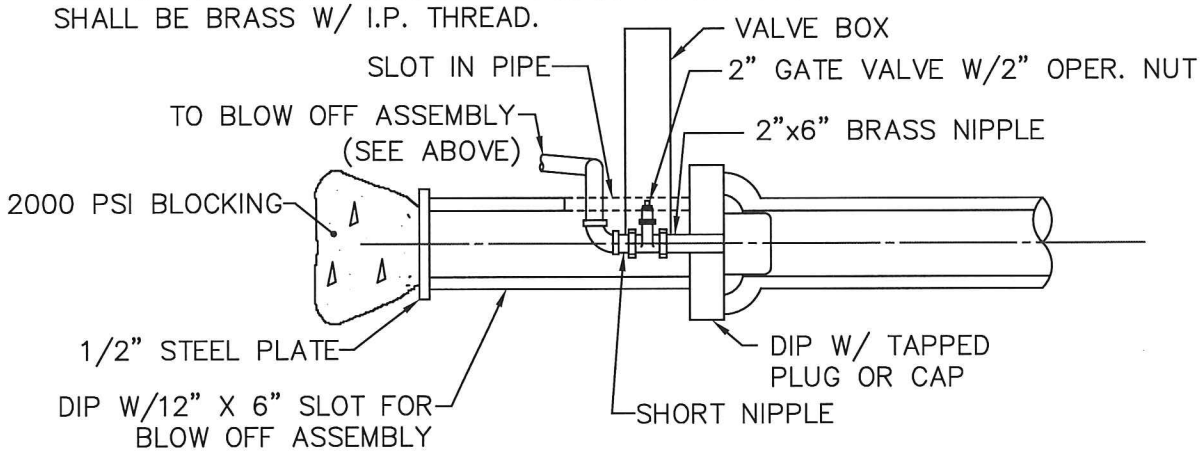

END OF LINE CONNECTION

APPROVED BY

MARYSVILLE CITY ENGINEER — DATE 5/15/15

CITY OF Marysville WASHINGTON

TEMPORARY 2" BLOW OFF ASSEMBLY

LAST REVISED 03/24/15

STANDARD PLAN 2-120-001

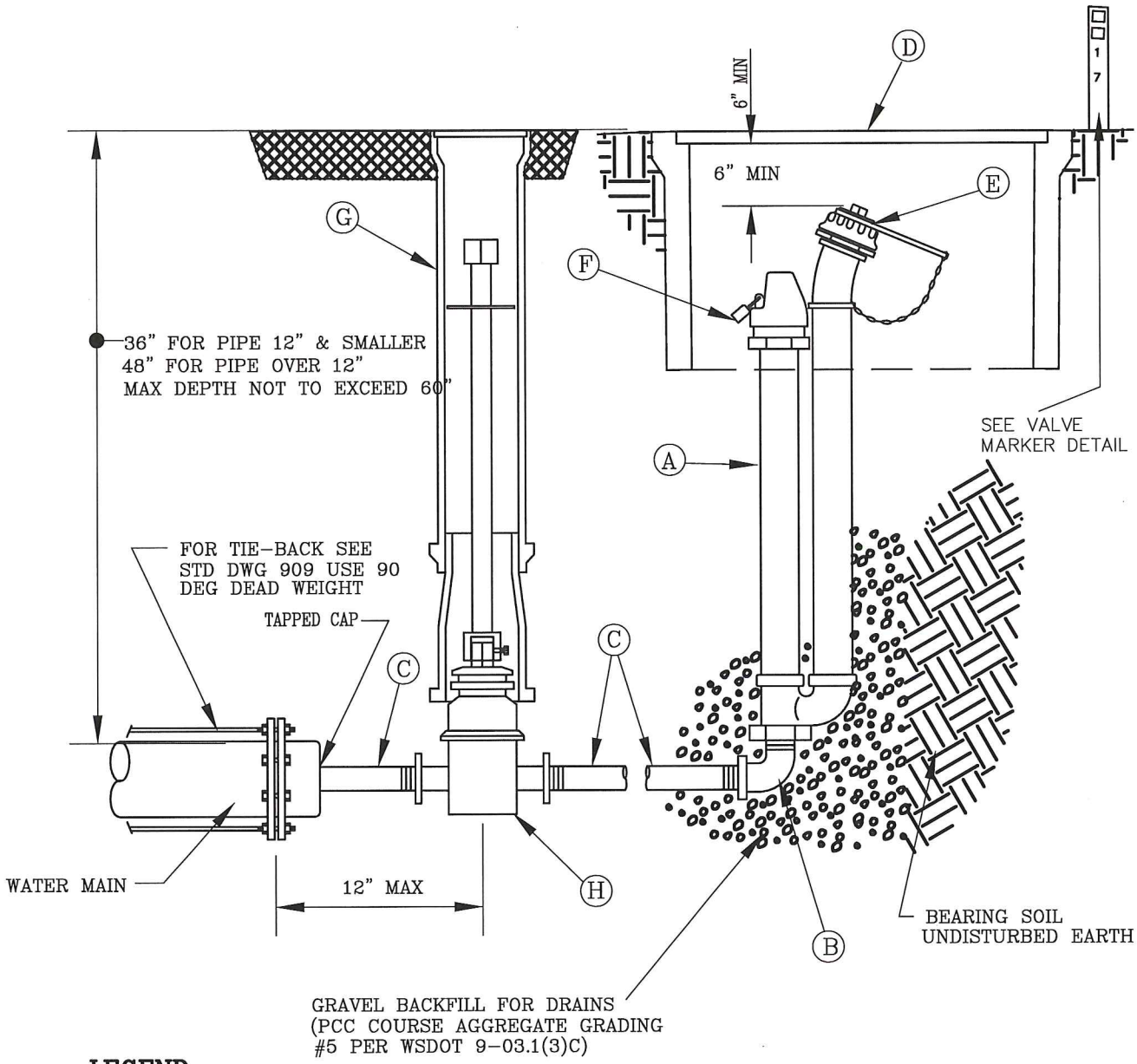

LEGEND:

A. GIL #101GHS BLOW-OFF
B. 2" BRASS STREET "L"
C. 8"X8"X4" TEE
D. CARSON BCF 1118-12 WITH HDPE COVER OR APPROVED EQUAL. LOCATED BEHIND SIDEWALK
E. 2" CAP NATIONAL STANDARD THREAD
F. LOCK TO BE SUPPLIED BY CITY OF MARYSVILLE.
G. VALVE BOX AND EXTENSION PER STD DWG 504
H. 4" GATE VALVE WITH RESILIENT SEAT (WATEROUS SERIES 500 OR M&H 3067 OR APPROVED EQUAL.

APPROVED BY

LAST REVISED 03/24/15

MARYSVILLE CITY ENGINEER

5/15/15
DATE

CITY OF Marysville WASHINGTON

PERMANENT 2" BLOWOFF ASSEMBLY

STANDARD PLAN 2-120-002

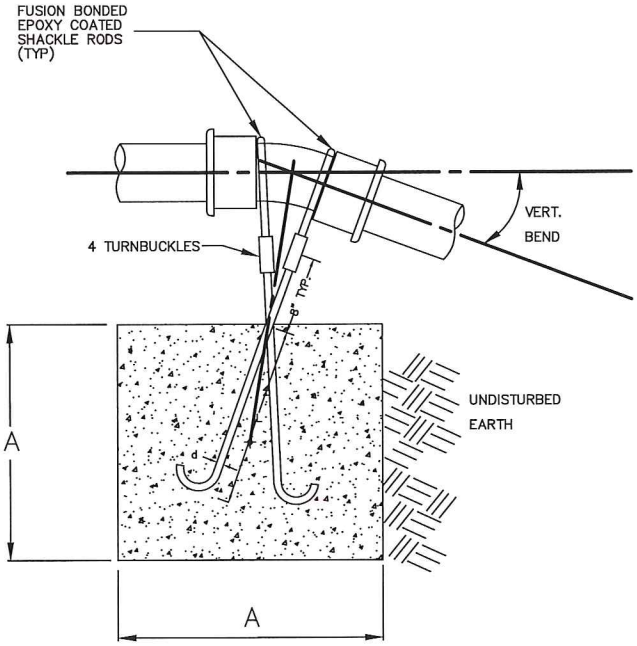

TYPE A

TYPE A BLOCKING FOR 11 ¼" & 22 ½" VERTICAL BENDS						
		VB		A	d	L
PIPE SIZE NOM. DIA. INCHES	TEST PRESSURE PSI	VERTICAL BEND DEGREES	NO OF CU FT OF CONC BLOCKING	SIDE OF CUBE FEET	DIA A SHACKLE RODS (2) INCHES	DEPTH OF RODS IN CONCRETE INCHES
4"	300	11 ¼"	8	2	¾	18
		22 ½"	12	2 ¼		24
6"	300	11 ¼"	12	2 ¼	¾	24
		22 ½"	27	3		
8"	300	11 ¼"	16	2 ½	¾	24
		22 ½"	43	3 ½		
12"	300	11 ¼"	64	4	1	36
		22 ½"	125	5		

TYPE B BLOCKING FOR 45° VERTICAL BENDS						
		VB		A	d	L
PIPE SIZE NOM. DIA. INCHES	TEST PRESSURE PSI	VERTICAL BEND DEGREES	NO OF CU FT OF CONC BLOCKING	SIDE OF CUBE FEET	DIA A SHACKLE RODS (2) INCHES	DEPTH OF RODS IN CONCRETE INCHES
4"	300	45	27	3	¾	20
6"			64	4		
8"			125	5		
12"			216	6	1	30

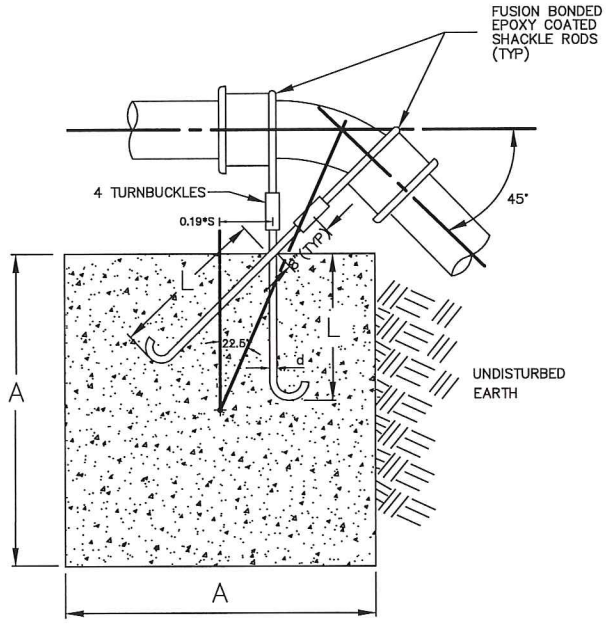

TYPE B

APPROVED BY

MARYSVILLE CITY ENGINEER

5/15/15

DATE

CITY OF Marysville WASHINGTON

VERTICAL THRUST BLOCKING DETAIL

STANDARD PLAN 2-130-001

LAST REVISED 05/12/09

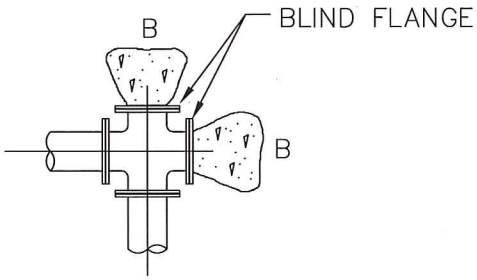

CAPPED CROSS

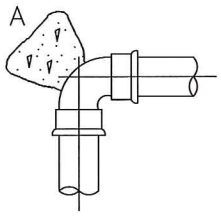

90° BEND

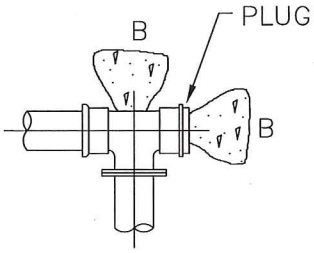

TEE

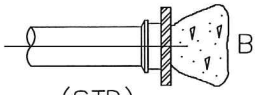

(STD)

OR

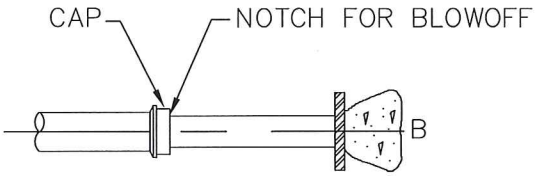

ONE PIPE SIZE SMALLER
THAN DEAD ENDING PIPE

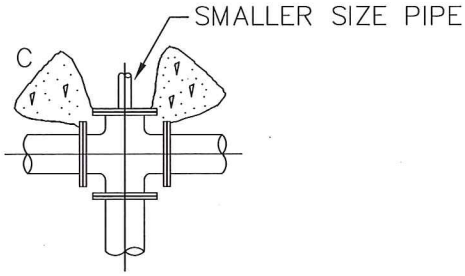

CROSS

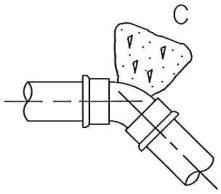

45° BEND

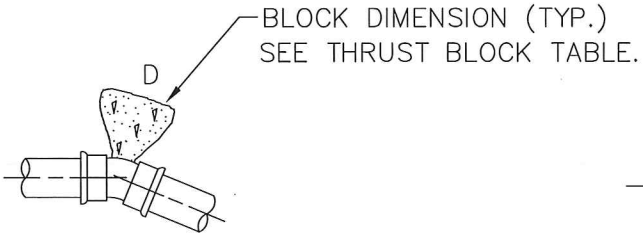

22 1/2° BEND

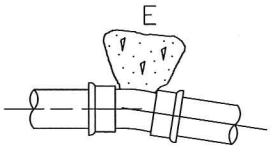

11 1/4° BEND

NOTES:

SEE THRUST BLOCK TABLE FOR ALL NOTES.
PROVIDE POLYETHYLENE SHEETING TO COVER BOLTS AND JOINTS FOR DISMANTLING.

APPROVED BY

MARYSVILLE CITY ENGINEER

5/9/07
DATE

CITY OF Marysville WASHINGTON

CONCRETE BLOCKING

STANDARD PLAN 2-130-002

LAST REVISED 10/16/01

THRUST BLOCK – TABLE

MIN. BEARING AREA AGAINST UNDISTURBED SOIL
SQUARE FEET

PIPE SIZE	A ($FT.^2$)	B ($FT.^2$)	C ($FT.^2$)	D ($FT.^2$)	E ($FT.^2$)
3"	3	2	2	2	2
6"	4	4	2	2	2
8"	7	6	4	2	2
10"	11	10	6	3	2
12"	16	14	9	5	3
14"	22	19	12	6	3
16"	29	25	16	8	4
18"	36	31	20	10	5
20"	45	39	24	13	6
22"	54	47	29	15	8
24"	64	56	35	18	9
28"	87	76	48	24	12
30"	101	87	55	28	14
36"	145	125	78	40	20
42"	197	171	107	55	27
48"	257	223	140	71	36

NOTES:

1. BEARING AREA OF CONC. THRUST BLOCK BASED ON 200 PSI PRESSURE AND SAFE SOIL BEARING LOAD OF 2,000 POUNDS PER SQUARE FOOT.
2. AREAS MUST BE ADJUSTED FOR OTHER PIPE SIZES, PRESSURES AND SOIL CONDITIONS.
3. CONCRETE BLOCKING SHALL BE CAST IN PLACE AND HAVE A MINIMUM BEARING SURFACE OF 6" X 6" SQUARE AGAINST THE FITTING.
4. BLOCK SHALL BEAR AGAINST FITTINGS ONLY AND SHALL BE CLEAR OF JOINTS TO PERMIT TAKING UP OR DISMANTLING OF JOINT.
5. CONTRACTOR SHALL INSTALL BLOCKING ADEQUATE TO WITHSTAND FULL TEST PRESSURE AS WELL AS TO CONTINUOUSLY WITHSTAND OPERATION PRESSURE UNDER ALL CONDITIONS OF SERVICE.
6. ALL BOLTS AND NUTS SHALL BE POLYWRAPPED PRIOR TO POURING CONCRETE.

APPROVED BY

MARYSVILLE CITY ENGINEER — DATE 5/8/07

CITY OF Marysville WASHINGTON

THRUST BLOCK TABLE

LAST REVISED 07/14/06

STANDARD PLAN 2-130-003

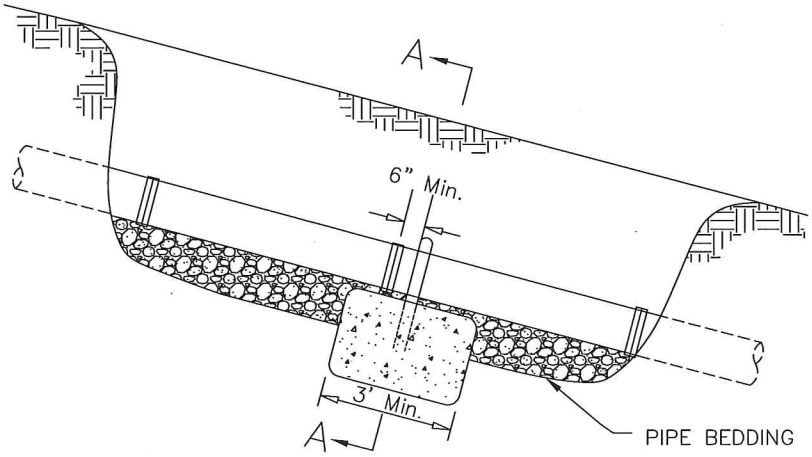

Step Footing
Anchor

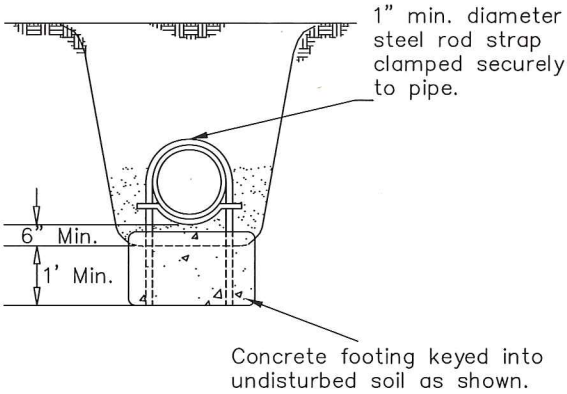

Section A–A
NTS

APPROVED BY

MARYSVILLE CITY ENGINEER

5/9/07
DATE

CITY OF Marysville WASHINGTON

PIPE ANCHOR DETAIL
FOR SLOPES

LAST REVISED 8/10/01

STANDARD PLAN 2–140–001

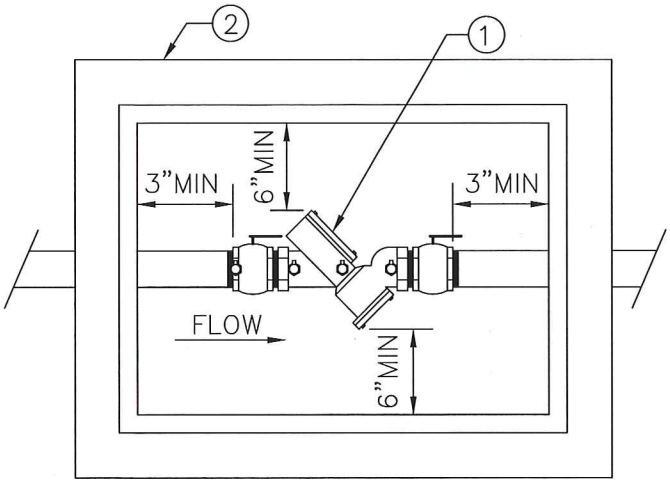

PLAN

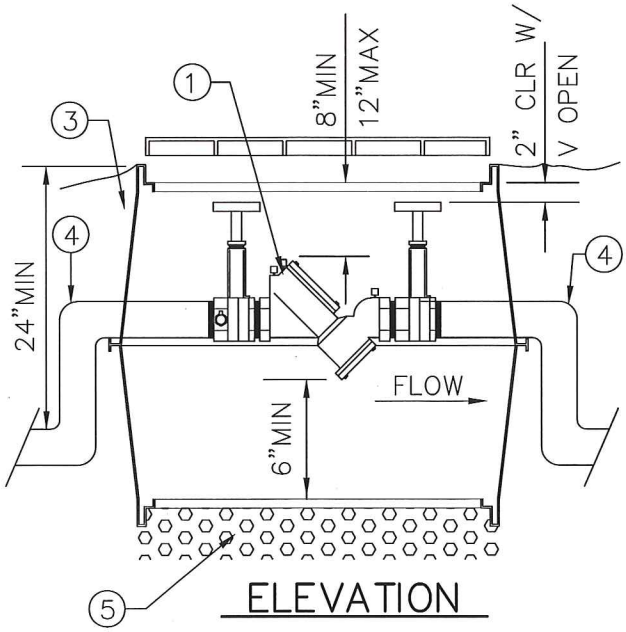

ELEVATION

LEGEND

1. STATE APPROVED DOUBLE CHECK VALVE ASSEMBLY.
2. IN TRAFFIC AREAS (FOR 2 1/2" ASSEMBLY AND SMALLER) USE:
   PRECAST CONCRETE VAULT (UTILITY VAULT CO 233-LA, OR APPROVED EQUAL),
   OR PLASTIC VALVE BOX (UTILITY VAULT CO 1324-12L, OR APPROVED EQUAL).
   IN TRAFFIC AREAS:
   A TRAFFIC LOADED BOX MUST BE USED AND LOCATION APPROVED BY THE CITY OF MARYSVILLE PRIOR TO INSTALLATION.
3. IF A DAYLIGHT DRAIN CANNOT BE PROVIDED, THERE MUST BE A 4" MINIMUM LAYER OF FREE DRAINING GRAVEL AT THE BOTTOM OF THE BOX.
4. ANGLES MAY BE IN OR OUT OF BOX, AS LONG AS SUFFICIENT ROOM IS ALLOWED AT EACH END FOR VALVE OPERATOR AND DCVA REPAIR OR MAINTENANCE.
5. PROVIDE 4" OF PEA GRAVEL.

NOTES

1. ALL TEST COCKS MUST HAVE BRASS PLUGS.
2. TEST COCKS MUST FACE UP OR SIDEWAYS, WHICH EVER IS MORE ACCESSIBLE
3. TEE AND GATE VALVE REQUIRED ON MAIN.
4. SINGLE DETECTOR CHECKS ARE NOT APPROVED BACKFLOW PREVENTION ASSEMBLIES.
5. ASSEMBLY REQUIRES CERTIFICATION UPON INSTALLATION AND RECERTIFICATION ANNUALLY.
6. TEST COCKS ARE REQUIRED TO BE PLUGGED IF ASSEMBLY IS INSTALLED UNDERGROUND.
7. MAXIMUM HEIGHT OF ASSEMBLY IS FIVE FEET UNLESS AN OSHA APPROVED PLATFORM IS PROVIDED.
8. METER SHALL BE INSTALLED SUCH THAT IT CAN BE READ WITHOUT ENTERING VAULT WITH ACCESS HATCH OPEN.
9. ALL DIMENSIONS ARE MINIMUM CLEARANCE REQUIREMENTS.
10. MINIMUM INSIDE VAULT HEIGHT IS 78" FOR 3" SERVICE AND LARGER.

APPROVED BY: 5/9/07

MARYSVILLE CITY ENGINEER — DATE

CITY OF Marysville WASHINGTON

DOUBLE CHECK VALVE ASSEMBLY.

STANDARD PLAN 2-150-001

LAST REVISED 07/14/06

APPROVED AIR GAP SEPARATION

AN APPROVED AIR GAP IS A PHYSICAL SEPARATION BETWEEN THE FREE FLOWING DISCHARGE END OF A POTABLE WATER SUPPLY PIPELINE AND THE OVERFLOW RIM OF AN OPEN OR NON-PRESSURE RECEIVING VESSEL. THESE VERTICAL, PHYSICAL SEPERATIONS MUST BE AT LEAST TWICE THE DIAMETER OF THE INLET PIPE BUT NEVER LESS THAN ONE INCH. IF SPLASHING IS A PROBLEM, TUBULAR SCREENS MAY BE ATTACHED OR THE SUPPLY LINE OUTLET MAY BE CUT AT A 45 DEGREE ANGLE. IF THE SUPPLY LINE IS CUT AT A 45 DEGREE ANGLE, THE AIR GAP DISTANCE IS MEASURED FROM THE CENTER OF THE ANGLE. HOSES ARE NOT ALLOWED. BYPASSES ARE NOT ALLOWED. THE INSPECTION OF AIR GAPS SHALL BE INCLUDED IN THE YEARLY TESTING PROGRAM FOR BACKFLOW ASSEMBLIES.

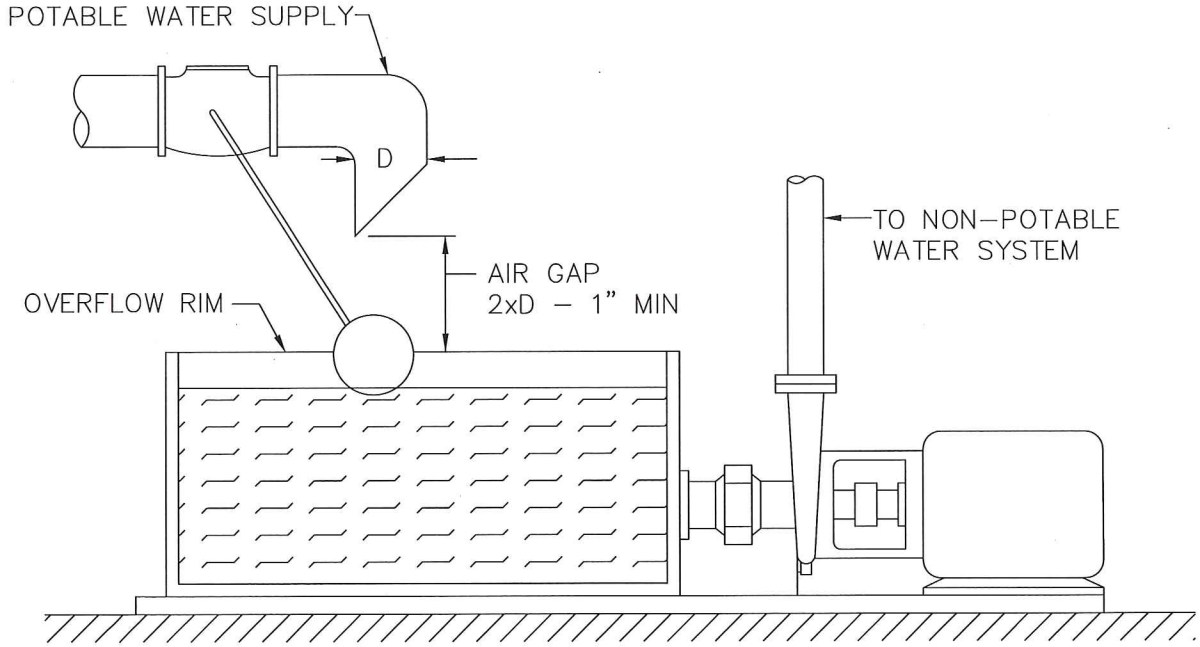

APPROVED BY

MARYSVILLE CITY ENGINEER

5/9/07
DATE

CITY OF Marysville WASHINGTON

AIR GAP FOR MAKEUP TANK

STANDARD PLAN 2-150-002

LAST REVISED 07/14/06

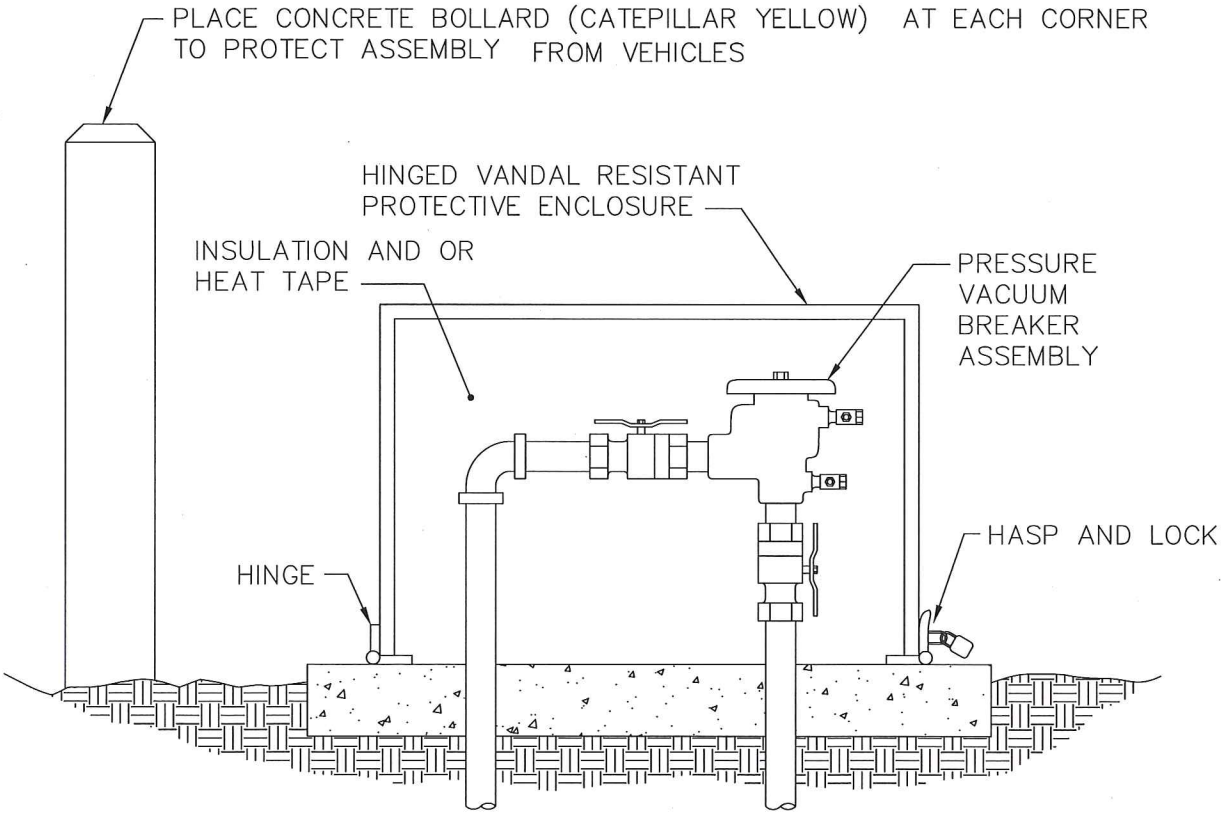

APPROVED BY

MARYSVILLE CITY ENGINEER

5/9/07
DATE

CITY OF Marysville WASHINGTON

PRESSURE VACUUM
BREAKER ASSEMBLY

LAST REVISED 8/10/01

STANDARD PLAN 2-150-003

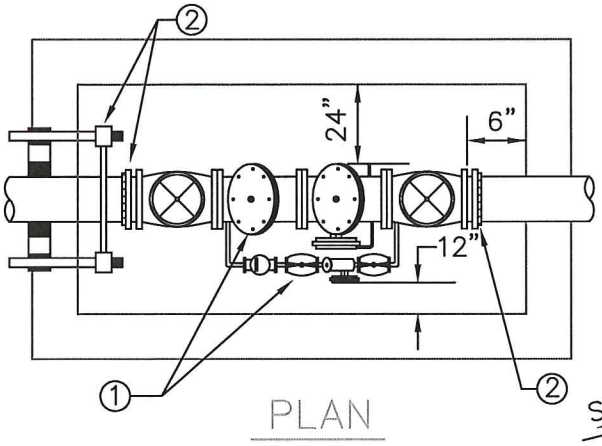

PLAN

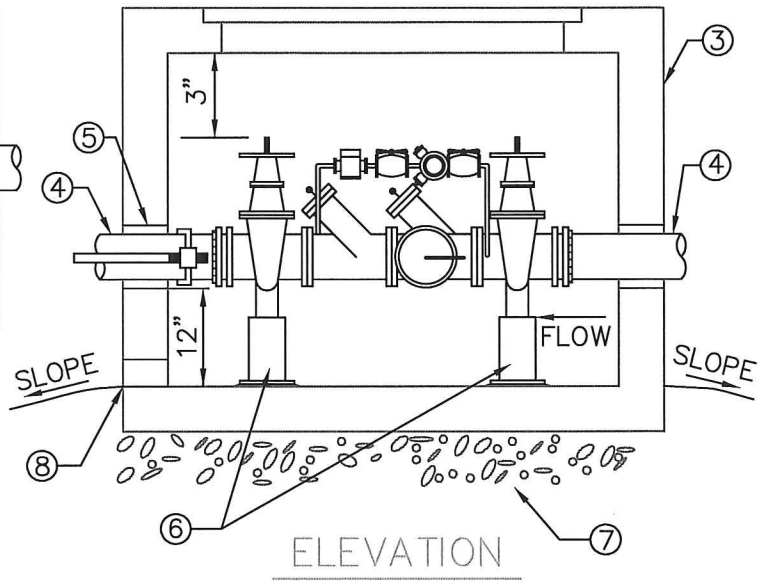

ELEVATION

LEGEND

① WASHINGTON STATE DEPT. OF HEALTH APPROVED REDUCED PRESSURE DETECTOR ASSEMBLY, 5/8" METER (METER TO READ IN GALLONS), AND A 3/4" REDUCED PRESSURE BACKFLOW ASSEMBLY.

② UNI–FLANGE WITH SET SCREWS OF MJ x FL ADAPTOR WITH MEGALUG OR GALVANIZED SHACKLE TO MAIN WITH 2–3/4" RODS, OR MJ RETAINER GLANDS.

③ PRECAST CONCRETE VAULT WITH STEEL ACCESS HATCH (AS MANUFACTURED BY UTILITY VAULT CO. OR AN APPROVED EQUAL).
ABOVE GROUND INSTALLATIONS WILL: BE PROVIDED WITH 6–6'x36" STEEL DOOR FOR ACCESS. THE EXTERIOR WILL BE PAINTED WITH AN APPROVED PAINT, PROVIDED WITH SUFFICIENT INSULATION TO PREVENT FREEZING, AND SITE WILL BE PROVIDED WITH A 6' HIGH SECURITY FENCE WITH PEDESTRIAN AND VEHICLE GATES.

④ DUCTILE IRON PIPE (SIZED AS REQUIRED) CLASS 52.

⑤ WATER TIGHT GROUT SHALL BE USED IN ALL VAULT PENETRATIONS.

⑥ 2 – GALVANIZED ADJUSTIBLE PIPE SUPPORTS FOR 2 1/2" DIAMETER AND LARGER PIPE.

⑦ GRAVEL FOUNDATION AS REQUIRED.

⑧ DRAIN SHALL BE INSTALLED WITH APPROVED AIR GAP (SEE SP 2–153–004), BE ABLE TO BE BORE SIGHTED TO DAYLIGHT WHICH MUST BE ABOVE 100 YEAR FLOOD LEVEL. DRAIN WILL BE SIZED SO AS TO PROVIDE FREE GRAVITY DRAINAGE OF MAX DISCHARGE OF RELIEF VALVE PORT.

NOTES

1. TEE AND GATE VALVE REQUIRED ON MAIN.
2. MAXIMUM HEIGHT OF ASSEMBLY IS 5' UNLESS AN OSHA APPROVED PLATFORM IS PROVIDED.
3. MINIMUM INSIDE VAULT HEIGHT IS 78" FOR 3" SERVICE AND LARGER.
4. METER SHALL BE INSTALLED IN SUCH A WAY THAT IT CAN BE READ WITHOUT ENTERING VAULT WITH ACCESS HATCH OPEN.
5. ALL DIMENSIONS ARE MINIMUM CLEARANCE REQUIREMENTS.
6. ASSEMBLY REQUIRES CERTIFICATION UPON INSTALLATION & ANNUAL RECERTIFICATION.

APPROVED BY

MARYSVILLE CITY ENGINEER — DATE 5/15/15

CITY OF Marysville WASHINGTON

REDUCED PRESSURE DETECTOR ASSEMBLY

LAST REVISED 03/24/15

STANDARD PLAN 2–151–001

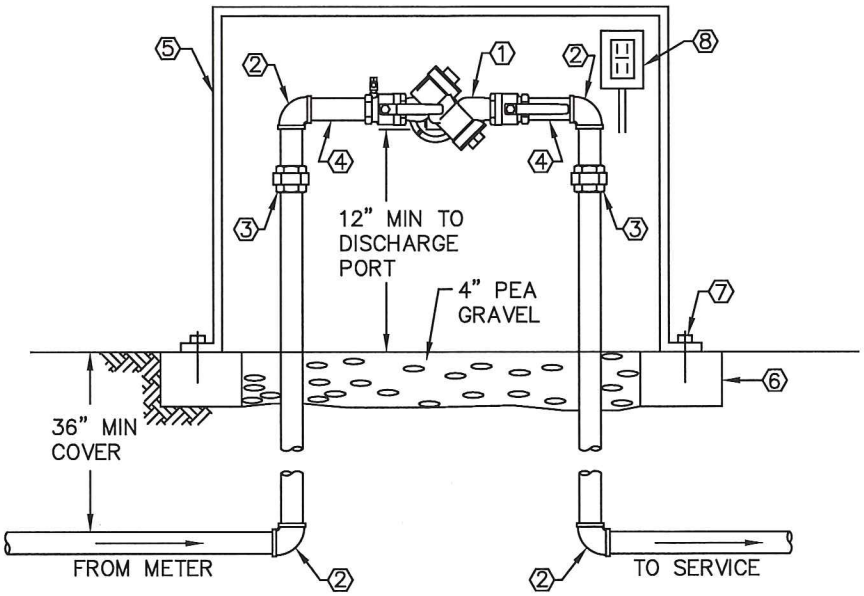

1", 1–1/2", & 2" REDUCED PRESSURE ASSEMBLY

LEGEND

1. WA. STATE DOH LISTED REDUCED PRESSURE PRINCIPLE ASSEMBLY WITH ISOLATION VALVES AND TEST COCKS. FEBCO MODEL 825Y OR EQUAL. ASSEMBLY MUST BE ON LIST OF APPROVED BACKFLOW PREVENTION ASSEMBLIES PREPARED BY THE WASHINGTON STATE DEPARTMENT OF HEALTH DRINKING WATER PROGRAM.
2. 90° BEND, THREADED BRASS
3. UNION, THREADED BRASS
4. SCHEDULE 80 RIGID BRASS PIPE

IF INSTALLED OUTDOORS:

5. HEATED AND INSULATED FIBERGLASS ENCLOSURE WITH HINGED LOCKABLE LID WHICH EXPOSES TOP AND FRONT OF RPBA. SHALL BE EQUIPPED WITH A SCREENED DRAINAGE PORT AT THE BASE AND FLEXIBLE FLAPS TO PREVENT DRAFTS.
   FOR 1" ASSEMBLY: HOT–BOX MODEL #1 – 27"W x 13"D x 23"H MINIMUM INSIDE DIMENSIONS.
   FOR 1–1/2" ASSEMBLY: HOT–BOX MODEL #1.5 – 33"W x 21"D x 23"H MIN. INSIDE DIMENSIONS.
   FOR 2" ASSEMBLY: HOT–BOX MODEL #2 – 39"W x 13"D x 35"H MINIMUM INSIDE DIMENSIONS.
   AS MANUFACTURED BY NORTHEAST FLORIDA ENTERPRISES, INC.
6. 6" WIDE X 4" HIGH CAST–IN–PLACE CONCRETE FOOTING AROUND BASE OF ENCLOSURE.
7. STAINLESS STEEL ANCHOR BOLTS, SIZE AND NUMBER AS RECOMMENDED BY ENCLOSURE MANUFACTURER.
8. 120 VOLT, SINGLE PHASE, 15 AMP GROUND FAULT INTERRUPTING RECEPTACLE, U.L. STANDARD 943, N.E.M.A. 3R. POWER SERVICE SHALL BE INSTALLED IN ACCORDANCE WITH THE NATIONAL ELECTRIC CODE AND CITY OF MARYSVILLE ORDINANCES. MOUNT RECEPTACLE AT TOP OF THE BACK WALL OF ENCLOSURE.

NOTES:

1. ALL PIPE AND FITTINGS SHALL BE SAME SIZE AS RPBA.
2. RPBA SHALL BE INSTALLED WITH TEST COCKS TOWARDS FRONT OF ENCLOSURE (FOR OUTDOOR INSTALLATIONS).
3. RPBA MAY BE INSTALLED INDOORS FOR FREEZE PROTECTION ONLY WITH PRIOR APPROVAL CITY. INDOOR INSTALLATIONS SHALL MEET CITY OF MARYSVILLE PLUMBING CODES AND BE ACCESSIBLE AND AVAILABLE TO CITY STAFF FOR INSPECTIONS.
4. RPBA SHALL BE CERTIFIED UPON INSTALLATION AND RECEIVE ANNUAL RECERTIFICATIONS.

APPROVED BY 5/15/15

MARYSVILLE CITY ENGINEER DATE

1", 1 1/2" & 2" REDUCED PRESSURE BACKFLOW PREVENTER ASSEMBLY

CITY OF Marysville WASHINGTON

LAST REVISED 03/24/15

STANDARD PLAN 2–151–002

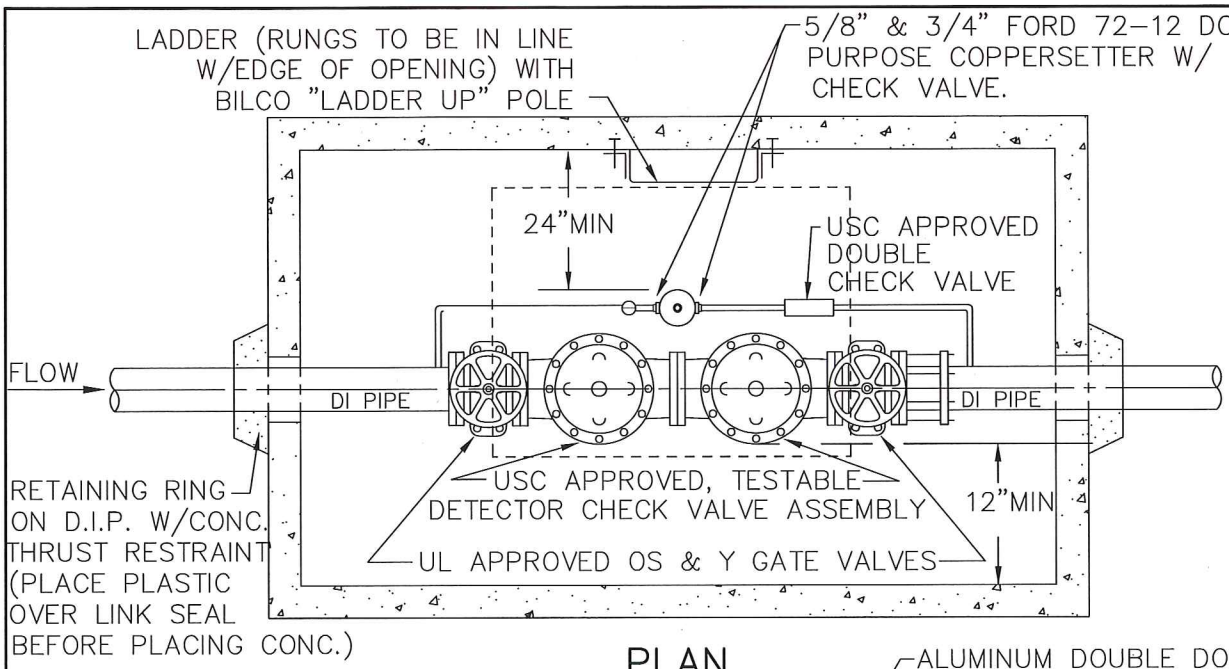

PLAN

N.T.S.

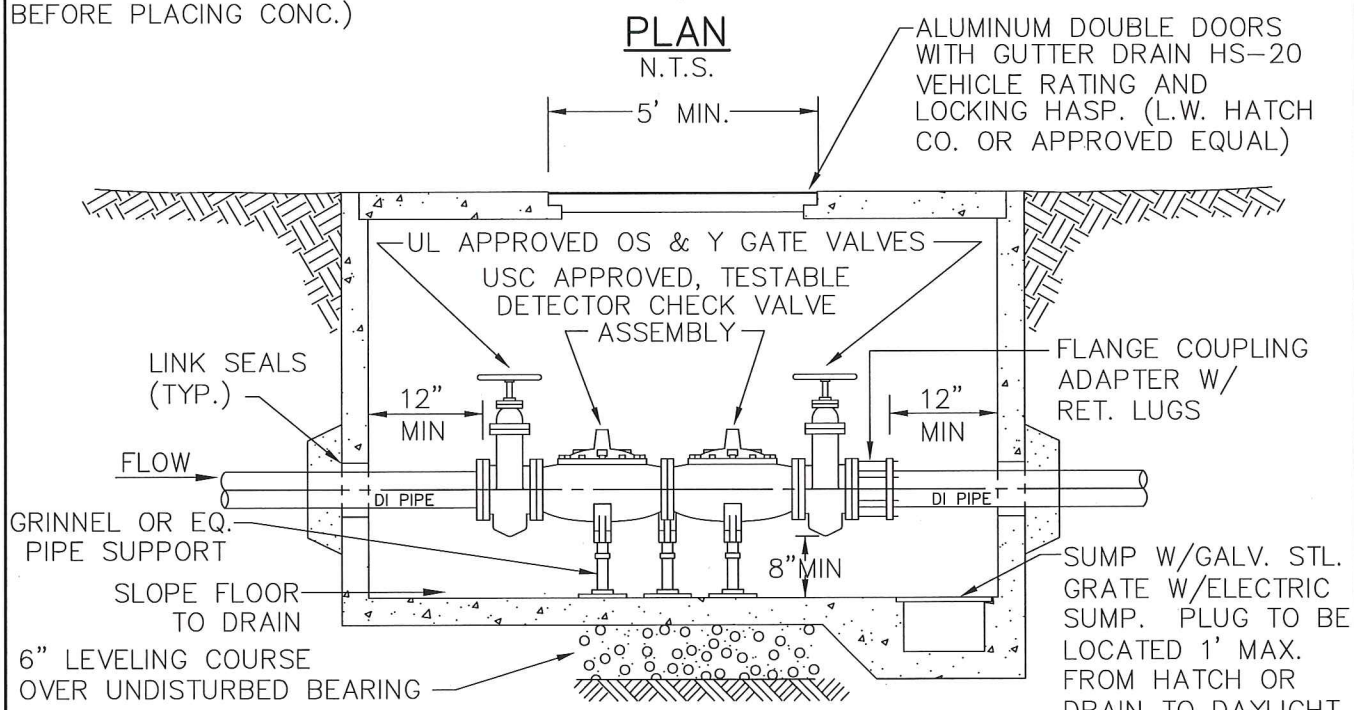

SECTION

N.T.S.

NOTES

1. 5/8" METER TO BE SUPPLIED BY CITY.
2. COVER SHALL EXTEND 6" ABOVE GRADE WHEN VAULT IS NOT IN TRAFFIC AREA AND SHALL BE FLUSH IN TRAFFIC AREA.
3. SLOPE PAVEMENT AWAY FROM COVER WHEN VAULT IS IN TRAFFIC AREA.
4. ALL BYPASSES TO BE SADDLED AND NOT DIRECT-TAPPED.
5. ALTERNATE LOCATION FOR FIRE SYSTEM; INSIDE BUILDING W/EXTERIOR DOOR FOR IMMEDIATE ACCESS.
6. ALL VALVES TO INCLUDE TAMPER SWITCH FOR FIRE SYSTEMS.

APPROVED BY

MARYSVILLE CITY ENGINEER — DATE 5/9/07

CITY OF Marysville WASHINGTON

DOUBLE CHECK DETECTOR VALVE

LAST REVISED 07/14/06

STANDARD PLAN 2-153-001

APPENDIX J

Water Rights Information

Washington State Department of Health
Division of Environmental Health
Office of Drinking Water

Table 1

WATER SYSTEM PLAN
WATER RIGHTS SELF ASSESSMENT – EXISTING 2014 STATUS

PERMIT CERTIFICATE OR CLAIM # [WRTS# [1]]	NAME ON DOCUMENT	PRIORITY DATE (List oldest first)	SOURCE NAME/ NUMBER	ANY PORTION SUPPLEMENTAL? (If yes, explain in footnote)	EXISTING WATER RIGHTS		EXISTING CONSUMPTION		CURRENT WATER RIGHT STATUS (Excess/Deficiency)	
					Maximum Instantaneous Flow Rate (Qi)	Maximum Annual Volume (Qa)	Maximum Instantaneous Flow Rate (Qi)	Maximum Annual Volume (Qa)	Maximum Instantaneous Flow Rate (Qi)	Maximum Annual Volume (Qa)
1. SWC 184 [2] [S1-*00644C]	City of Marysville	7/14/1921	Edward Springs/ S01	No	0.34 cfs (160 gpm)	467.7 afy	160 gpm	165 afy	0 gpm	302.7 afy
2. SWC 2180 [S1-*03556CWRIS]	Town of Marysville	11/14/1931	Edward Springs/ S01	No	2.30 cfs (1,032 gpm)	1,656 afy	740 gpm	582 afy [3]	292 gpm	1,074 afy
3. GWC 286 [G1-*00083CWRIS]	Town of Marysville	1/12/1946	Edward Springs Well No. 1R / S011	No	300 gpm	160 afy	200 gpm	160 afy [3]	100 gpm	0 afy
4. GWC 1152 [G1-*02391CWRIS]	Town of Marysville	3/7/1952	Edward Springs Well No. 1R / S011	Yes	300 gpm (nonadditive)	320 afy (nonadditive)	200 gpm (nonadditive)	6 afy [3]	100 gpm (nonadditive)	314 afy (nonadditive)
5. GWC 2096 [G1-*02379CWRIS]	Town of Marysville	3/7/1952	Edward Springs Well No. 2 / S06	Yes	500 gpm	800 afy (nonadditive)	290 gpm	241 afy [3]	210 gpm	559 afy (nonadditive)
6. GWC 4155 [G1-*03984CWRIS]	Town of Marysville	5/5/1955	Cedarcrest LaJoy Well / NA	Yes	57 gpm	91 afy (nonadditive)	57 gpm	91 afy [5]	0 gpm	0 afy (nonadditive)
7. GWC 3100 [G1-*04221CWRIS]	Town of Marysville	2/14/1956	Sunnyside Well No. 1R / NA	Yes	1,000 gpm	1,344 afy (nonadditive)	0 gpm	0 afy	1,000 gpm	1,344 afy (nonadditive)
8. GWC 5469 [G1-*07276CWRIS]	City of Marysville	7/27/1964	Sunnyside Well No. 2 / S03	Yes	1,000 gpm	1,176 afy (nonadditve)	0 gpm	0 afy	1,000 gpm	1,176 afy (nonadditive)
9. GWC 6980 [G1-*08803CWRIS]	City of Marysville	6/19/1967	Lake Goodwin Well / S05	No	550 gpm	880 afy	360 gpm	32 afy	190 gpm	848 afy
10. G1-00675C [G1-00675CWRIS]	City of Marysville	7/14/1970	Stillaguamish Ranney Well / S04	No	2,250 gpm	3,600 afy	2,210 gpm	1,224 afy	40 gpm	2,376 afy
11. G1-23487C [G1-23487CWRIS]	City of Marysville	10/17/1979	Highway 9 Well/ S08	No	1,000 gpm	1,600 afy	0 gpm	0 afy	1,000 gpm	1,600 afy

12. G1-25182P [G1-25182P]	City of Marysville	2/16/1998	Edward Springs Well No. 3 / S09	Yes	400 gpm	451 afy (nonadditive)	300 gpm	249 afy [3]	100 gpm	202 afy (nonadditive)
TOTAL	**********	*********	*********	**********	8,249 gpm	8,363.7 afy	4,317 gpm	2,750 afy [5]	3,932 gpm	5,613.7 afy

INTERTIE NAME/ IDENTIFIER	NAME OF PURVEYOR PROVIDING WATER	EXISTING LIMITS ON INTERTIE USE		EXISTING CONSUMPTION THROUGH INTERTIE		CURRENT INTERTIE SUPPLY STATUS (Excess/Deficiency)	
		Maximum Instantaneous Flow Rate (Qi)	Maximum Annual Volume (Qa)	Maximum Instantaneous Flow Rate (Qi)	Maximum Annual Volume (Qa)	Maximum Instantaneous Flow Rate (Qi)	Maximum Annual Volume (Qa)
1. JOA Supply Line / 24050L / S07	City of Everett	9,132 gpm	14,730 afy	9,132 gpm	2,801 afy	0 gpm	11,929 afy
TOTAL	**********	9,132 gpm	14,730 afy	9,132 gpm	2,801 afy	0 gpm	11,929 afy

PENDING WATER RIGHT APPLICATION (New/Change)	NAME ON APPLICATION	DATE SUBMITTED	ANY PORTION SUPPLEMENTAL? (If yes, explain in footnote)	PENDING WATER RIGHTS	
				Maximum Instantaneous Flow Rate (Qi) Requested	Maximum Annual Volume (Qa) Requested
1. None					

Notes:

1. WRTS # - Department of Ecology Water Right Tracking System number
2. SWC 184 – This water right contains both a municipal and mitigation component. Only the municipal portion is shown here. To be conservative, the rate shown here is the lowest municipal rate that can be diverted for municipal supply throughout the year.
3. Total water withdrawn and diverted from Edward Springs and the associated wells in 2014 was 1,402 afy. Breakdown by individual well and spring within the Edward Springs source is estimated in this table as being equivalent to the percentage of the total combined pumping rate capable from the well/spring with respect to the maximum production from the entire source. Springs = 53%, Well 1R = 12%, Well 2 = 17%, and Well 3 = 18%.
4. Nonadditive is used to identify either instantaneous rate or annual volume that is not additive to the other rates and volumes listed in the table.
5. The total annual volume used is higher in this table by 91 afy due to the inclusion of the Cedarcrest LaJoy Well used for golf course irrigation, which is a stand-alone system, but per the water rights is debited against the City's annual municipal volume authorized.
6. 8.2% distribution system gain from source metering to consumption added equally to each source.

Washington State Department of Health
Division of Environmental Health
Office of Drinking Water

Table 1

WATER SYSTEM PLAN
WATER RIGHTS SELF ASSESSMENT – 6 YEAR (2022) FORECAST

PERMIT CERTIFICATE OR CLAIM # [WRTS# [1]]	NAME ON DOCUMENT	PRIORITY DATE (List oldest first)	SOURCE NAME/ NUMBER	ANY PORTION SUPPLEMENTAL? (If yes, explain in footnote)	EXISTING WATER RIGHTS		FORECASTED WATER USE FROM SOURCES (6-year Demand)		FORECASTED WATER RIGHT STATUS (Excess/Deficiency)	
					Maximum Instantaneous Flow Rate (Qi)	Maximum Annual Volume (Qa)	Maximum Instantaneous Flow Rate (Qi)	Maximum Annual Volume (Qa)	Maximum Instantaneous Flow Rate (Qi)	Maximum Annual Volume (Qa)
1. SWC 184 [2] [S1-*00644C]	City of Marysville	7/14/1921	Edward Springs/ S01	No	0.34 cfs (160 gpm)	467.7 afy	160 gpm	180 afy	0 gpm	287.7 afy
2. SWC 2180 [S1-*03556CWRIS]	Town of Marysville	11/14/1931	Edward Springs/ S01	No	2.30 cfs (1,032 gpm)	1,656 afy	740 gpm	638 afy [3]	292 gpm	1,018 afy
3. GWC 286 [G1-*00083CWRIS]	Town of Marysville	1/12/1946	Edward Springs Well No. 1R / S011	No	300 gpm	160 afy	200 gpm	160 afy [3]	100 gpm	0 afy
4. GWC 1152 [G1-*02391CWRIS]	Town of Marysville	3/7/1952	Edward Springs Well No. 1R / S011	Yes	300 gpm (nonadditive)	320 afy (nonadditive)	200 gpm (nonadditive)	22 afy [3]	100 gpm (nonadditive)	298 afy (nonadditive)
5. GWC 2096 [G1-*02379CWRIS]	Town of Marysville	3/7/1952	Edward Springs Well No. 2 / S06	Yes	500 gpm	800 afy (nonadditive)	290 gpm	263 afy [3]	210 gpm	537 afy (nonadditive)
6. GWC 4155 [G1-*03984CWRIS]	Town of Marysville	5/5/1955	Cedarcrest LaJoy Well / NA	Yes	57 gpm	91 afy (nonadditive)	57 gpm	91 afy [5]	0 gpm	0 afy (nonadditive)
7. GWC 3100 [G1-*04221CWRIS]	Town of Marysville	2/14/1956	Sunnyside Well No. 1R / NA	Yes	1,000 gpm	1,344 afy (nonadditive)	1,000 gpm	133 afy	0 gpm	1,211 afy (nonadditive)
8. GWC 5469 [G1-*07276CWRIS]	City of Marysville	7/27/1964	Sunnyside Well No. 2 / S03	Yes	1,000 gpm	1,176 afy (nonadditve)	1,000 gpm	133 afy	0 gpm	1,043 afy (nonadditive)
9. GWC 6980 [G1-*08803CWRIS]	City of Marysville	6/19/1967	Lake Goodwin Well / S05	No	550 gpm	880 afy	360 gpm	32 afy	190 gpm	848 afy
10. G1-00675C [G1-00675CWRIS]	City of Marysville	7/14/1970	Stillaguamish Ranney Well / S04	No	2,250 gpm	3,600 afy	2,210 gpm	1,357 afy	40 gpm	2,376 afy
11. G1-23487C [G1-23487CWRIS]	City of Marysville	10/17/1979	Highway 9 Well/ S08	No	1,000 gpm	1,600 afy	0 gpm	0 afy	1,000 gpm	1,600 afy

12. G1-25182P [G1-25182P]	City of Marysville	2/16/1998	Edward Springs Well No. 3 / S09	Yes	400 gpm	451 afy (nonadditive)	300 gpm	272 afy [3]	100 gpm	202 afy (nonadditive)
TOTAL	**********	*********	*********	**********	8,249 gpm	8,363.7 afy	6,317 gpm	3,280 afy [5]	1,932 gpm	5,083.7 afy

INTERTIE NAME/ IDENTIFIER	NAME OF PURVEYOR PROVIDING WATER	EXISTING LIMITS ON INTERTIE USE		FORECASTED CONSUMPTION THROUGH INTERTIE		FORECASTED INTERTIE SUPPLY STATUS (Excess/Deficiency)	
		Maximum Instantaneous Flow Rate (Qi)	Maximum Annual Volume (Qa)	Maximum Instantaneous Flow Rate (Qi)	Maximum Annual Volume (Qa)	Maximum Instantaneous Flow Rate (Qi)	Maximum Annual Volume (Qa)
1. JOA Supply Line / 24050L / S07	City of Everett	9,132 gpm	14,730 afy	9,132 gpm	2,801 afy	0 gpm	11,929 afy
TOTAL	**********	9,132 gpm	14,730 afy	9,132 gpm	2,801 afy	0 gpm	11,929 afy

PENDING WATER RIGHT APPLICATION (New/Change)	NAME ON APPLICATION	DATE SUBMITTED	ANY PORTION SUPPLEMENTAL? (If yes, explain in footnote)	PENDING WATER RIGHTS	
				Maximum Instantaneous Flow Rate (Qi) Requested	Maximum Annual Volume (Qa) Requested
1. None					

Notes:

1. WRTS # - Department of Ecology Water Right Tracking System number
2. SWC 184 – This water right contains both a municipal and mitigation component. Only the municipal portion is shown here. To be conservative, the rate shown here is the lowest municipal rate that can be diverted for municipal supply throughout the year.
3. Breakdown by individual well and spring within the Edward Springs source is estimated in this table as being equivalent to the percentage of the total combined pumping rate capable from the well/spring with respect to the maximum production from the entire source. Springs = 53%, Well 1R = 12%, Well 2 = 17%, and Well 3 = 18%.
4. Nonadditive is used to identify either instantaneous rate or annual volume that is not additive to the other rates and volumes listed in the table.
5. The total annual volume used is higher in this table by 91 afy due to the inclusion of the Cedarcrest LaJoy Well used for golf course irrigation, which is a stand-alone system, but per the water rights is debited against the City's annual municipal volume authorized.
6. Existing 8.2% distribution system gain from source metering to consumption added equally to each source.
7. The use numbers shown are based on the projected water demand without conservation.

The Department of Health is an equal opportunity agency. For persons with disabilities, this document is available on request in other formats. To submit a request, please call 1-800-525-0127 (TTY 1-800-833-6388). For additional copies of this form, call 1-800-521-0323. This and other forms are available at http://www.doh.wa.gov/ehp/dw

Washington State Department of Health
Division of Environmental Health
Office of Drinking Water

Table 1

WATER SYSTEM PLAN
WATER RIGHTS SELF ASSESSMENT – 10 YEAR (2026) FORECAST

PERMIT CERTIFICATE OR CLAIM # [WRTS# [1]]	NAME ON DOCUMENT	PRIORITY DATE (List oldest first)	SOURCE NAME/ NUMBER	ANY PORTION SUPPLEMENTAL? (If yes, explain in footnote)	EXISTING WATER RIGHTS		FORECASTED WATER USE FROM SOURCES (10-year Demand)		FORECASTED WATER RIGHT STATUS (Excess/Deficiency)	
					Maximum Instantaneous Flow Rate (Qi)	Maximum Annual Volume (Qa)	Maximum Instantaneous Flow Rate (Qi)	Maximum Annual Volume (Qa)	Maximum Instantaneous Flow Rate (Qi)	Maximum Annual Volume (Qa)
1. SWC 184 [2] [S1-*00644C]	City of Marysville	7/14/1921	Edward Springs/ S01	No	0.34 cfs (160 gpm)	467.7 afy	160 gpm	180 afy	0 gpm	287.7 afy
2. SWC 2180 [S1-*03556CWRIS]	Town of Marysville	11/14/1931	Edward Springs/ S01	No	2.30 cfs (1,032 gpm)	1,656 afy	740 gpm	690 afy [3]	292 gpm	966 afy
3. GWC 286 [G1-*00083CWRIS]	Town of Marysville	1/12/1946	Edward Springs Well No. 1R / S011	No	300 gpm	160 afy	200 gpm	160 afy [3]	100 gpm	0 afy
4. GWC 1152 [G1-*02391CWRIS]	Town of Marysville	3/7/1952	Edward Springs Well No. 1R / S011	Yes	300 gpm (nonadditive)	320 afy (nonadditive)	200 gpm (nonadditive)	33 afy [3]	100 gpm (nonadditive)	287 afy (nonadditive)
5. GWC 2096 [G1-*02379CWRIS]	Town of Marysville	3/7/1952	Edward Springs Well No. 2 / S06	Yes	500 gpm	800 afy (nonadditive)	290 gpm	280 afy [3]	210 gpm	520 afy (nonadditive)
6. GWC 4155 [G1-*03984CWRIS]	Town of Marysville	5/5/1955	Cedarcrest LaJoy Well / NA	Yes	57 gpm	91 afy (nonadditive)	57 gpm	91 afy [5]	0 gpm	0 afy (nonadditive)
7. GWC 3100 [G1-*04221CWRIS]	Town of Marysville	2/14/1956	Sunnyside Well No. 1R / NA	Yes	1,000 gpm	1,344 afy (nonadditive)	1,000 gpm	230 afy	0 gpm	1,114 afy (nonadditive)
8. GWC 5469 [G1-*07276CWRIS]	City of Marysville	7/27/1964	Sunnyside Well No. 2 / S03	Yes	1,000 gpm	1,176 afy (nonadditve)	1,000 gpm	230 afy	0 gpm	946 afy (nonadditive)
9. GWC 6980 [G1-*08803CWRIS]	City of Marysville	6/19/1967	Lake Goodwin Well / S05	No	550 gpm	880 afy	360 gpm	32 afy	190 gpm	848 afy
10. G1-00675C [G1-00675CWRIS]	City of Marysville	7/14/1970	Stillaguamish Ranney Well / S04	No	2,250 gpm	3,600 afy	2,210 gpm	1,454 afy	40 gpm	2,146 afy
11. G1-23487C [G1-23487CWRIS]	City of Marysville	10/17/1979	Highway 9 Well/ S08	No	1,000 gpm	1,600 afy	0 gpm	0 afy	1,000 gpm	1,600 afy

12. G1-25182P [G1-25182P]	City of Marysville	2/16/1998	Edward Springs Well No. 3 / S09	Yes	400 gpm	451 afy (nonadditive)	300 gpm	290 afy [3]	100 gpm	161 afy (nonadditive)
TOTAL	**********	*********	*********	**********	8,249 gpm	8,363.7 afy	6,317 gpm	3,670 afy [5]	1,932 gpm	4,693.7 afy

INTERTIE NAME/ IDENTIFIER	NAME OF PURVEYOR PROVIDING WATER	EXISTING LIMITS ON INTERTIE USE		FORECASTED CONSUMPTION THROUGH INTERTIE		FORECASTED INTERTIE SUPPLY STATUS (Excess/Deficiency)	
		Maximum Instantaneous Flow Rate (Qi)	Maximum Annual Volume (Qa)	Maximum Instantaneous Flow Rate (Qi)	Maximum Annual Volume (Qa)	Maximum Instantaneous Flow Rate (Qi)	Maximum Annual Volume (Qa)
1. JOA Supply Line / 24050L / S07	City of Everett	9,132 gpm	14,730 afy	9,132 gpm	2,801 afy	0 gpm	11,929 afy
TOTAL	**********	9,132 gpm	14,730 afy	9,132 gpm	2,801 afy	0 gpm	11,929 afy

PENDING WATER RIGHT APPLICATION (New/Change)	NAME ON APPLICATION	DATE SUBMITTED	ANY PORTION SUPPLEMENTAL? (If yes, explain in footnote)	PENDING WATER RIGHTS	
				Maximum Instantaneous Flow Rate (Qi) Requested	Maximum Annual Volume (Qa) Requested
1. None					

Notes:

1. WRTS # - Department of Ecology Water Right Tracking System number
2. SWC 184 – This water right contains both a municipal and mitigation component. Only the municipal portion is shown here. To be conservative, the rate shown here is the lowest municipal rate that can be diverted for municipal supply throughout the year.
3. Breakdown by individual well and spring within the Edward Springs source is estimated in this table as being equivalent to the percentage of the total combined pumping rate capable from the well/spring with respect to the maximum production from the entire source. Springs = 53%, Well 1R = 12%, Well 2 = 17%, and Well 3 = 18%.
4. Nonadditive is used to identify either instantaneous rate or annual volume that is not additive to the other rates and volumes listed in the table.
5. The total annual volume used is higher in this table by 91 afy due to the inclusion of the Cedarcrest LaJoy Well used for golf course irrigation, which is a stand-alone system, but per the water rights is debited against the City's annual municipal volume authorized.
6. Existing 8.2% distribution system gain from source metering to consumption added equally to each source.
7. The use numbers shown are based on the projected water demand without conservation.

The Department of Health is an equal opportunity agency. For persons with disabilities, this document is available on request in other formats. To submit a request, please call 1-800-525-0127 (TTY 1-800-833-6388). For additional copies of this form, call 1-800-521-0323. This and other forms are available at http://www.doh.wa.gov/ehp/dw

Washington State Department of Health
Division of Environmental Health
Office of Drinking Water

Table 1

WATER SYSTEM PLAN
WATER RIGHTS SELF ASSESSMENT – 20 YEAR (2036) FORECAST

PERMIT CERTIFICATE OR CLAIM # [WRTS# [1]]	NAME ON DOCUMENT	PRIORITY DATE (List oldest first)	SOURCE NAME/ NUMBER	ANY PORTION SUPPLEMENTAL? (If yes, explain in footnote)	EXISTING WATER RIGHTS		FORECASTED WATER USE FROM SOURCES (20-year Demand)		FORECASTED WATER RIGHT STATUS (Excess/Deficiency)	
					Maximum Instantaneous Flow Rate (Qi)	Maximum Annual Volume (Qa)	Maximum Instantaneous Flow Rate (Qi)	Maximum Annual Volume (Qa)	Maximum Instantaneous Flow Rate (Qi)	Maximum Annual Volume (Qa)
1. SWC 184 [2] [S1-*00644C]	City of Marysville	7/14/1921	Edward Springs/ S01	No	0.34 cfs (160 gpm)	467.7 afy	160 gpm	180 afy	0 gpm	287.7 afy
2. SWC 2180 [S1-*03556CWRIS]	Town of Marysville	11/14/1931	Edward Springs/ S01	No	2.30 cfs (1,032 gpm)	1,656 afy	740 gpm	835 afy [3]	292 gpm	821 afy
3. GWC 286 [G1-*00083CWRIS]	Town of Marysville	1/12/1946	Edward Springs Well No. 1R / S011	No	300 gpm	160 afy	200 gpm	160 afy [3]	100 gpm	0 afy
4. GWC 1152 [G1-*02391CWRIS]	Town of Marysville	3/7/1952	Edward Springs Well No. 1R / S011	Yes	300 gpm (nonadditive)	320 afy (nonadditive)	200 gpm (nonadditive)	65 afy [3]	100 gpm (nonadditive)	255 afy (nonadditive)
5. GWC 2096 [G1-*02379CWRIS]	Town of Marysville	3/7/1952	Edward Springs Well No. 2 / S06	Yes	500 gpm	800 afy (nonadditive)	290 gpm	327 afy [3]	210 gpm	473 afy (nonadditive)
6. GWC 4155 [G1-*03984CWRIS]	Town of Marysville	5/5/1955	Cedarcrest LaJoy Well / NA	Yes	57 gpm	91 afy (nonadditive)	57 gpm	91 afy [5]	0 gpm	0 afy (nonadditive)
7. GWC 3100 [G1-*04221CWRIS]	Town of Marysville	2/14/1956	Sunnyside Well No. 1R / NA	Yes	1,000 gpm	1,344 afy (nonadditive)	1,000 gpm	502 afy	0 gpm	842 afy (nonadditive)
8. GWC 5469 [G1-*07276CWRIS]	City of Marysville	7/27/1964	Sunnyside Well No. 2 / S03	Yes	1,000 gpm	1,176 afy (nonadditve)	1,000 gpm	502 afy	0 gpm	674 afy (nonadditive)
9. GWC 6980 [G1-*08803CWRIS]	City of Marysville	6/19/1967	Lake Goodwin Well / S05	No	550 gpm	880 afy	360 gpm	32 afy	190 gpm	848 afy
10. G1-00675C [G1-00675CWRIS]	City of Marysville	7/14/1970	Stillaguamish Ranney Well / S04	No	2,250 gpm	3,600 afy	2,210 gpm	1,726 afy	40 gpm	1,874 afy
11. G1-23487C [G1-23487CWRIS]	City of Marysville	10/17/1979	Highway 9 Well/ S08	No	1,000 gpm	1,600 afy	0 gpm	0 afy	1,000 gpm	1,600 afy

12. G1-25182P [G1-25182P]	City of Marysville	2/16/1998	Edward Springs Well No. 3 / S09	Yes	400 gpm	451 afy (nonadditive)	300 gpm	338 afy [3]	100 gpm	113 afy (nonadditive)
TOTAL	**********	*********	*********	**********	8,249 gpm	8,363.7 afy	6,317 gpm	4,759 afy [5]	1,932 gpm	3,604.7 afy

INTERTIE NAME/ IDENTIFIER	NAME OF PURVEYOR PROVIDING WATER	EXISTING LIMITS ON INTERTIE USE		FORECASTED CONSUMPTION THROUGH INTERTIE		FORECASTED INTERTIE SUPPLY STATUS (Excess/Deficiency)	
		Maximum Instantaneous Flow Rate (Qi)	Maximum Annual Volume (Qa)	Maximum Instantaneous Flow Rate (Qi)	Maximum Annual Volume (Qa)	Maximum Instantaneous Flow Rate (Qi)	Maximum Annual Volume (Qa)
1. JOA Supply Line / 24050L / S07	City of Everett	9,132 gpm	14,730 afy	9,132 gpm	2,801 afy	0 gpm	11,929 afy
TOTAL	**********	9,132 gpm	14,730 afy	9,132 gpm	2,801 afy	0 gpm	11,929 afy

PENDING WATER RIGHT APPLICATION (New/Change)	NAME ON APPLICATION	DATE SUBMITTED	ANY PORTION SUPPLEMENTAL? (If yes, explain in footnote)	PENDING WATER RIGHTS	
				Maximum Instantaneous Flow Rate (Qi) Requested	Maximum Annual Volume (Qa) Requested
1. None					

Notes:

1. WRTS # - Department of Ecology Water Right Tracking System number
2. SWC 184 – This water right contains both a municipal and mitigation component. Only the municipal portion is shown here. To be conservative, the rate shown here is the lowest municipal rate that can be diverted for municipal supply throughout the year.
3. Breakdown by individual well and spring within the Edward Springs source is estimated in this table as being equivalent to the percentage of the total combined pumping rate capable from the well/spring with respect to the maximum production from the entire source. Springs = 53%, Well 1R = 12%, Well 2 = 17%, and Well 3 = 18%.
4. Nonadditive is used to identify either instantaneous rate or annual volume that is not additive to the other rates and volumes listed in the table.
5. The total annual volume used is higher in this table by 91 afy due to the inclusion of the Cedarcrest LaJoy Well used for golf course irrigation, which is a stand-alone system, but per the water rights is debited against the City's annual municipal volume authorized.
6. Existing 8.2% distribution system gain from source metering to consumption added equally to each source.
7. The use numbers shown are based on the projected water demand without conservation.

The Department of Health is an equal opportunity agency. For persons with disabilities, this document is available on request in other formats. To submit a request, please call 1-800-525-0127 (TTY 1-800-833-6388). For additional copies of this form, call 1-800-521-0323. This and other forms are available at http://www.doh.wa.gov/ehp/dw

APPENDIX 6-1

Water Rights

Surface Water Certificate 184 3
Surface Water Certificate 2180 9
Groundwater Certificate 286-A 13
Groundwater Certificate 1152-A 21
Groundwater Certificate 2096-A 27
Groundwater Certificate 4155-A 33
Groundwater Certificate 3100-A.....41
Groundwater Certificate 5469-A 49
Groundwater Certificate 6980-A 57
Groundwater Certificate G1-00675C 65
Groundwater Certificate G1-23487C 77
Permit G1-25182 P 87

EDWARD SPRINGS
JULY 14, 1921
360 GPM

23738. S. F. No. 369—1923. Approved as to Form by Dept. of Efficiency.

CERTIFICATE RECORD NO. One, PAGE NO. 184

Cert 184

STATE OF WASHINGTON, COUNTY OF Snohomish

CERTIFICATE OF WATER RIGHT

(For rights perfected under original, enlargement or secondary permits.)

(In accordance with the provisions of Chapter 117, Laws of Washington for 1917, and the regulations of the State Hydraulic Engineer thereunder.)

This is to certify, that TOWN OF MARYSVILLE, a municipal corporation of the fourth class *of* Marysville, *State of* Washington, *has made proof to the satisfaction of the State Supervisor of Hydraulics of Washington, of a right to the use of the waters of* unnamed stream, *a tributary of* Stillaguamish River, *for the purposes of* domestic supply, *under* Appropriation *Permit No.* 886, *of the State Supervisor of Hydraulics, and that said right to the use of said waters has been perfected in accordance with the laws of Washington, and is hereby confirmed by the State Supervisor of Hydraulics of Washington and entered of record in Volume* One, *at Page* 184, *on the* 20th *day of* April, *19*27; *that the right hereby confirmed dates from* July 14, *19*21; *that the amount of water to which such right is entitled and hereby confirmed, for the purposes aforesaid, is limited to an amount actually beneficially used for said purposes, and shall not exceed* 0.8 *cubic feet per second.* (360 GPM)

A description of [redacted] *the place where such water is put to beneficial use, is as follows:*

Township	Range	Section	Forty-Acre Tract	[redacted]	[redacted]
31 N.	4 E.	24	SW¼ of SW¼	Point of Diversion	

The right to the use of the water aforesaid hereby confirmed is restricted to the lands or place of use herein described, except as provided in Section 39, Chapter 117, Session Laws 1917.

WITNESS the seal and signature of the State Supervisor of Hydraulics affixed this 20th *day of* April, *19*27.

L. P. K. Tiffany
State Supervisor of Hydraulics.

Form 10

*Permit No.....

APPLICATION FOR A PERMIT

To Appropriate the Public Waters of the State of Washington

I, The Town of Marysville, a municipal corporation of the fourth class, (Name of applicant)

~~located in the~~ ..... (Postoffice), *County of* Snohomish,

State of Washington, *do hereby make application for a permit to appropriate the following described public waters of the State of Washington subject to existing rights:*

If the applicant is a corporation, give date and place of incorporation.....

1. *The source of the proposed appropriation is* Unnamed (Name of stream) *tributary of* Stilaquamish River

2. *The amount of water which the applicant intends to apply to beneficial use is* eight-tenths *cubic feet per second.*

3. *The use to which the water is to be applied is* Domestic supply (Irrigation, power, mining, manufacturing, domestic supplies, etc.)

4. *Time during which water will be required each year* Entire

5. *The approximate point of diversion is located* (Give distance and bearing to section corner)

N. 65 degrees 00' W. 1600 feet from the 1/4 Sec. Cor. common to Sections 24 & 25, T. N. R. E. W. M.

being within the SW¼ SW¼ (Give smallest legal subdivision) *of Sec.* 24, *Tp.* 31 N. (No. N. or S.), *R.* 4 E. (No. E. or W.) *W. M., in the county of* Snohomish

6. *The* Pipe Line (Main ditch, canal, or pipe line) *to be* 8½ *miles in length, terminating in the* NE¼ SW¼ (Smallest legal subdivision) *of Sec.* 28, *Tp.* 30 N. (No. N. or S.), *R.* 5 E. (No. E. or W.) *W. M., the proposed location being shown throughout on the accompanying map.*

7. *The name of the ditch, canal or other works is*.....

8. *Estimated cost of development necessary to fully utilize the appropriation herein asked for* $75,000.00 including spring development, pipe line and storage in Town.

DESCRIPTION OF WORKS.

DIVERSION WORKS—

9. (*a*) *Height of diversion dam*.....*feet; length on top*.....*feet; length at bottom*.....*feet; material to be used and character of construction*.....

(Loose rock, concrete, masonry, rock and brush, timber crib, etc., wasteway over or around dam)

(*b*) *Description of headgate*..... (Timber, concrete, etc.; number and size of openings)

---

* When storage works are contemplated a storage permit must be filed in addition to the above. These forms can be secured together [illegible]

CANAL SYSTEM—

10. (a) *Give approximate dimensions at each point of canal where materially changed in size, stating miles from headgate. At headgate: Width on top (at water line)*.....*feet; width on bottom*.....*feet; depth of water*.....*feet; grade*.....*feet fall per one thousand feet.*

(b) *At*.....*miles from headgate: Width on top (at water line)*.....*feet; width on bottom*.....*feet; depth of water*.....*feet; grade*.....*feet; depth of water*.....*feet; grade*.....*feet fall per one thousand feet.*

.....

.....

.....

FILL IN THE FOLLOWING INFORMATION WHERE THE WATER IS USED FOR:

IRRIGATION—

11. *The land to be irrigated has a total area of*.....*acres, described as follows:*.....
(Give legal subdivision by section, township and range)

.....

.....

.....

.....

.....

.....

.....

.....
(If more space is required, attach separate sheet)

DUTY OF WATER—

Character of soil: Depth....., *sandy*....., *volcanic ash*..... *loam*....., *clay*....., *etc.*.....;
Annual precipitation.....*inches: precipitation during growing season*.....*inches;*
Depth of irrigation water required.....
(Expressed in feet or inches)

.....

POWER, MINING, MANUFACTURING, OR TRANSPORTATION PURPOSES—

13. (a) *Total amount of power to be developed*.....*H. P.*
(Theoretical horsepower)

(b) *Total fall to be utilized*.....*feet.*
(Head)

(c) *The nature of the works by means of which the power is to be developed*.....

.....

.....

(d) *Such works to be located in*.....*of Sec*.....,
(Legal subdivision)
Tp.....*R*.....*W. M.*
(No. N. or S.) (No. E. or W.)

(e) *To what stream is the water to be returned*.....

(f) *Locate point of return*.....*Sec*.....,
Tp......*R*.....*W. M.*
(No. N. or S.) (No. E. or W.)

(g) *The use to which power is to be applied is*.....

MUNICIPAL SUPPLY—

14. *To supply the city of* Marysville (Name)

Snohomish *County, having a present population of* 1300

and an estimated population of 2500 *in 19*30.

15. *Estimated present requirement* Three-tenths cu. ft. per sec.

16. *Estimated future requirement* Eight-tenths cu. ft. per sec.

17. *Construction work will begin on or before* August 10, 1921.

18. *Construction work will be completed on or before* Feby. 10, 1921.

Duplicate maps of the proposed ditch or other works, prepared in accordance with the rules of the State Hydraulic Engineer accompany this application.

The Town of Marysville, (Name of applicant)

By [signature] Mayor

Attest: W. S. Myers Town Clerk

Signed in the presence of us as witnesses:

(1) [signature] (Name), Marysville, Washington (Address of witness)

(2) [signature] (Name), Marysville, Washington (Address of witness)

Remarks:

STATE OF WASHINGTON, }
COUNTY OF THURSTON, } ss.

This is to certify that I have examined the foregoing application (Received ..... (Date)*)*

together with the accompanying maps and data, and return the same ..... (Date of return)

for correction or completion, as follows:

In order to retain its priority, this application must be returned to the State Hydraulic Engineer, with corrections, on or before ....., *19*.....

WITNESS my hand this ..... *day of* ....., *19*.....

State Hydraulic Engineer.

STATE OF WASHINGTON,
COUNTY OF THURSTON. } ss.

This is to certify that I have examined the foregoing application and do hereby grant the same, subject to the following limitations and conditions. If for irrigation, this appropriation shall be subject to such reasonable rotation system as may be ordered by the State Hydraulic Engineer .....

.....

.....

.....

The amount of water appropriated shall be limited to the amount which can be applied to beneficial use and not to exceed ..... *cubic feet per second, or its equivalent in case of rotation. The priority date of this permit is* .....

Actual construction work shall begin on or before .....

and shall thereafter be prosecuted with reasonable diligence and be completed on or before .....

.....

Complete application of the water to the proposed use shall be made on or before .....

.....

WITNESS my hand this ..... *day of* ..... *19* .....

.....
State Hydraulic Engineer.

This form approved by the State Hydraulic Engineer, 1917.

Application No. 6441

Permit No. .....

PERMIT

To Appropriate the Public Waters of the State of Washington

Filed by .....

County of .....

This instrument was first received in the office of the State Hydraulic Engineer, Olympia, Washington, on the ..... *day of* ....., *19* ....., *at* ..... *o'clock* ..... *M.*

Returned to applicant for correction .....

Corrected Application received .....

Approved .....

Recorded in Book No. ..... *of Permits, on Page* .....

.....
State Hydraulic Engineer.

FRANK M. LAMBORN, PUBLIC PRINTER, OLYMPIA

Before your certificate of water right is issued it will be necessary for you to fill out and file with the State Hydraulic Engineer a copy of each of the following reports:

1st. Progress report.
2nd. Notice of water right application.
3rd. Notice to begin construction.
4th. Notice of prosecution of work with diligence.
5th. Notice of completion of construction.
6th. Notice of application of water to a beneficial use.
7th. Proof of appropriation of water.

Upon a satisfactory showing that the appropriation has been perfected as provided by statute the

S.W. CERT. No. 2180

CERTIFICATE OF CHANGE OF POINT OF DIVERSION OF WATER

In accordance with the provisions of Chapter 117, Laws of Washington for 1917, and amendments thereto, and rules thereunder of the State Supervisor of the Division of Water Resources.

THIS IS TO CERTIFY that the Town of Marysville, Washington, has complied with all of the requirements of Sec. 39 of the Water Code of the State of Washington and is hereby granted a permit to change the point of diversion of waters of Edwards Creek in the amount of 2.3 second-feet as granted under Water Right Certificate No. 2180; from a point situated in the W½ of NW¼ of Sec. 24, Twp. 31 N., Rge. 4 E.W.M.; to a point situated in the SW¼ of SW¼ of Sec. 24, Twp. 31 N., Rge. 4 E.W.M., which point is approximately ½ mile south of the present point of diversion, all within Snohomish County, Washington.

WITNESS the seal and signature of the State Supervisor of the Division of Water Resources of the State of Washington, affixed this 8th day of May, 1952.

Chas J. Barthoet

CHAS. J. BARTHOLET, State Supervisor
Division of Water Resources

RECORDED:
Vol. 1, Page 354
Records of Change of
Point of Diversion of
Water.

ENGINEERING DATA
O.K. MRW

S.W. CERT. NO. 2180
EDWARD SPRINGS
NOV. 14 1931
1,035 GPM

S. F. No. 363—11-44—1M. 7551.

CERTIFICATE RECORD NO. 5, PAGE NO. 2180

STATE OF WASHINGTON, COUNTY OF Snohomish

CERTIFICATE OF WATER RIGHT.

Cert. 354 Division
d. 8-8-42 5-8-42

(In accordance with the provisions of Chapter 117, Laws of Washington for 1917, and amendments thereto, and the rules and regulations of the State Supervisor of Hydraulics thereunder.)

This is to certify, that Town of Marysville *of* Marysville, *State of* Washington, *has made proof to the satisfaction of the State Supervisor of Hydraulics of Washington, of a right to the use of the waters of* Edwards Creek, *a tributary of* Stillaguamish River, *with point or points of diversion within the* W½ of NW¼ *Sec.* 24, *Twp.* 31 N., *Range* 4 E., *W. M., for the purposes of* Municipal supply

under Appropriation *Permit No.* 1864 *issued by the State Supervisor of Hydraulics, and that said right to the use of said waters has been perfected in accordance with the laws of Washington, and is hereby confirmed by the State Supervisor of Hydraulics of Washington and entered of record in Volume* 5, *at Page* 2180, *on the* 3rd *day of* April, *19*45; *that the right hereby confirmed dates from* November 14, 1931; *that the amount of water to which such right is entitled and hereby confirmed, for the purposes aforesaid, is limited to an amount actually beneficially used for said purposes, and shall not exceed* 2.3 cubic feet per second

A description of the lands under such right to which the water hereby confirmed is appurtenant, and the place where such water is put to beneficial use, is as follows:

PLACE OF USE			LEGAL SUBDIVISION	FOR IRRIGATION	
Section	Township	Range		No. Acres Described in Permit	No. Acres Actually Irrigated

LOCATION OF POWER PLANT			LEGAL SUBDIVISION	FOR POWER	
Section	Township	Range		H. P. Described in Permit	H. P. Actually Developed

Section	Township	Range	LEGAL SUBDIVISION	FOR OTHER USES
	30 N.	5 E.W.M.	Town of Marysville and vicinity	Municipal supply

The right to the use of the water aforesaid hereby confirmed is restricted to the lands or place of use herein described, except as provided in Sections 6 and 7, Chapter 122, Laws of 1929.

WITNESS the seal and signature of the State Supervisor of Hydraulics affixed this 3rd *day of* April, *19*45

S. F. No. 1854-A—2-51—20M. 27462.

SECTION PLAT

Sec. ..... Twp. 31 ..... N. R. 4 E.

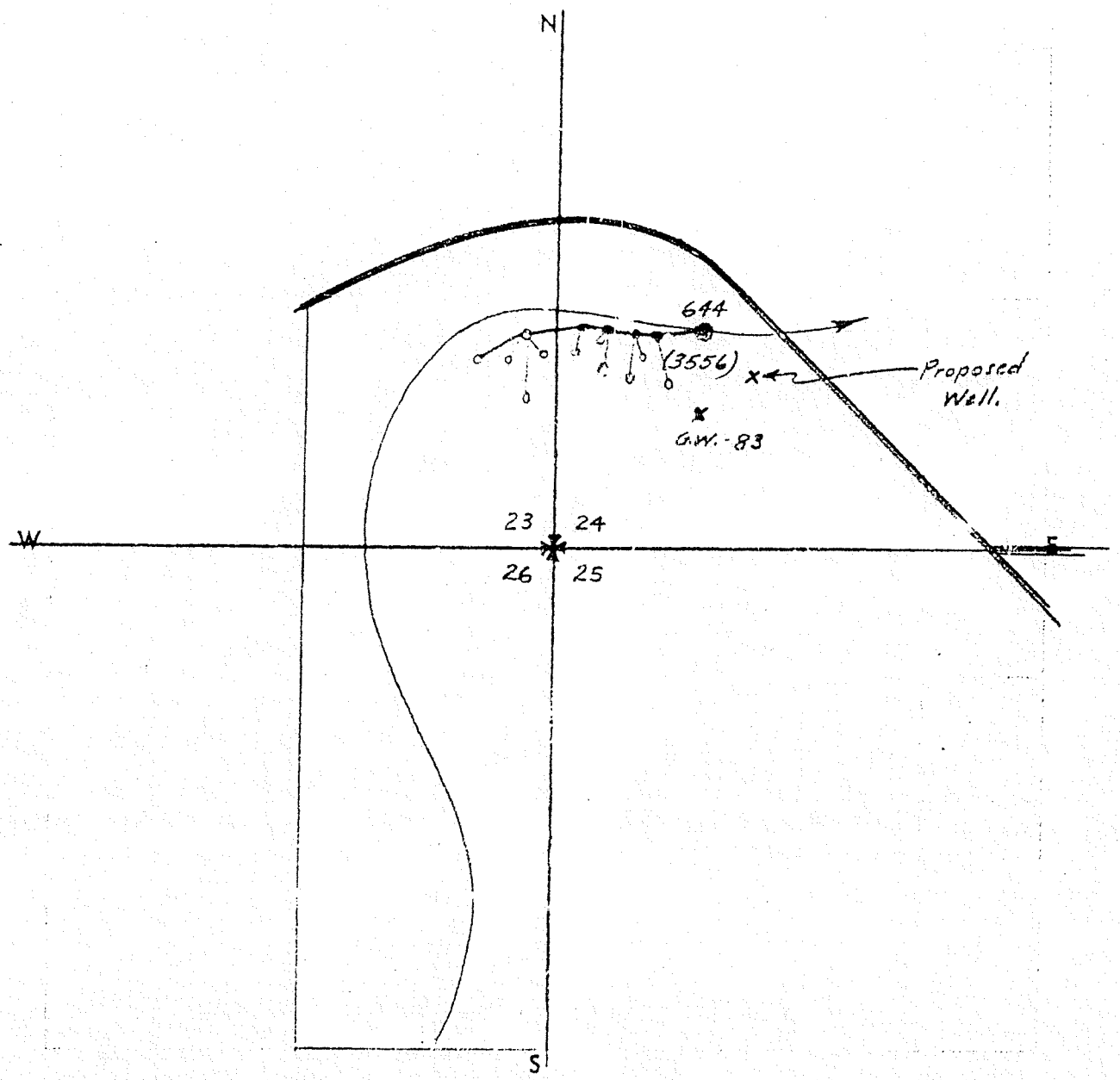

Be sure to show distance and bearing of point of diversion from nearest 40-acre corner. Also traveling directions from nearest town on main highway.

Scale: 1 inch = 800 feet.

Appl. #644 - Cert. #184 - 0.80 c.f.s.

→ Appl. #3556 - Cert. #2180 - 2.30 c.f.s. states div. pt as N 22° E 1300' from SW Corner of NW¼ Sec. 24. Probably should be from SW Cor. of SW¼.

S. F. No. 1854-A—1930.
Approved as to Form by Dept. of Effic... 9437.

SECTION PLAT SNO... ...ISH COUNTY, WASH.

Sec. 24 Twp. 31 R. 4 E. W.M.

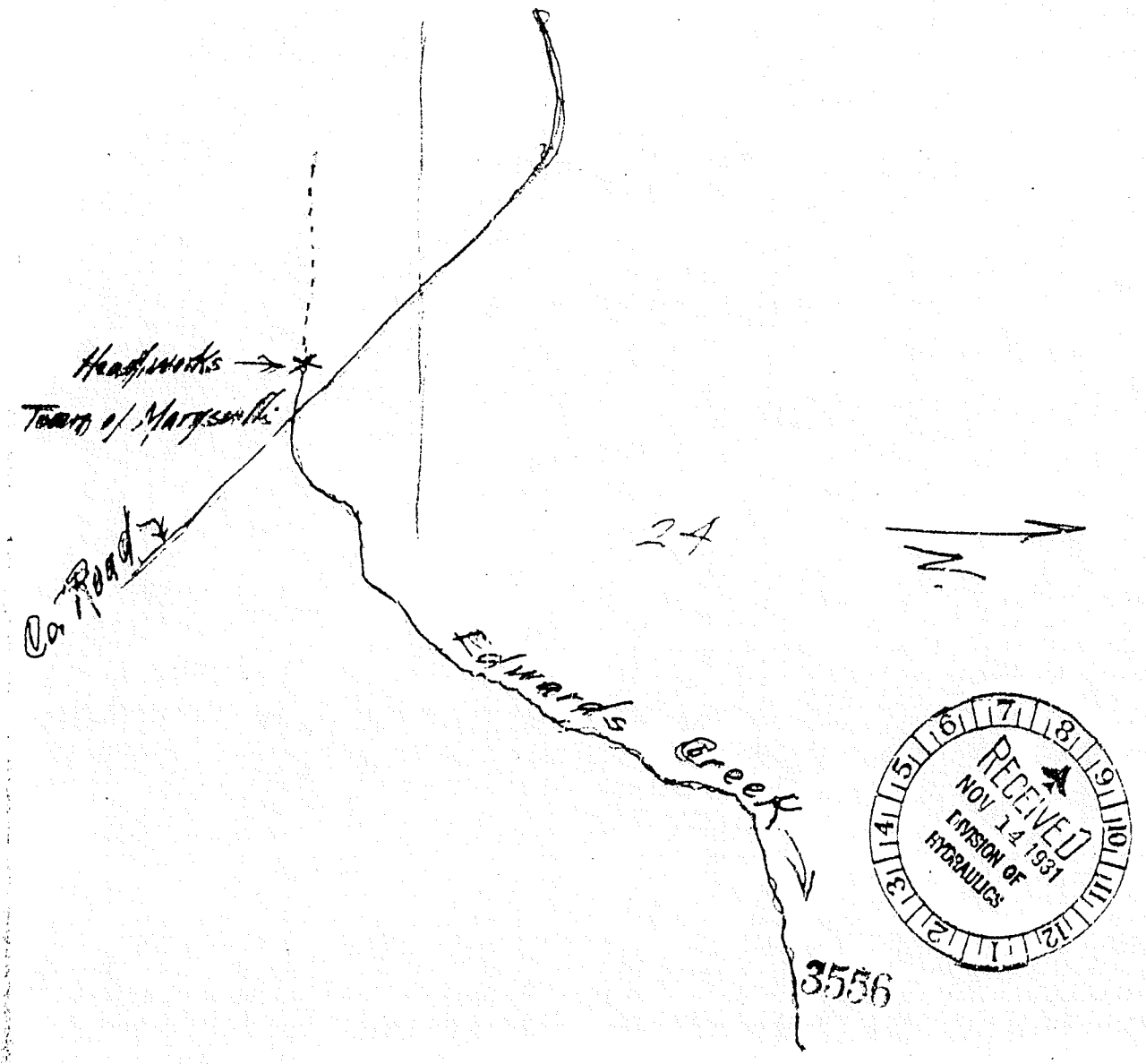

RECEIVED
NOV 14 1931
DIVISION OF
HYDRAULICS

Be sure to show distance and bearing of point of diversion from nearest 40-acre corner. Also traveling directions from nearest town on main highway.

For directions as to how to reach the property please call at the office of the Town Clerk, City Hall, Marysville.

ED. SPRINGS WELL #1
JAN 12, 1946
300 GPM

S. F. No. 7361—10-47—1M. 16559.

CERTIFICATE RECORD No. 1 PAGE No. 286-A

STATE OF WASHINGTON, COUNTY OF Snohomish

Cert 1152

Certificate of Ground Water Right

Issued in accordance with the provisions of Chapter 263, Laws of Washington for 1945, and the rules and regulations of the State Supervisor of Hydraulics thereunder.

THIS IS TO CERTIFY *That* TOWN OF MARYSVILLE

of Marysville, Washington, *has made proof to the satisfaction of the State Supervisor of Hydraulics of Washington, of a right to the use of the ground waters of a* Well

located within the SW¼ of SW¼ of Sec. 24, Twp. 31 N., Rge. 4 E.W.M.

for the purpose of Municipal supply

under Ground Water Permit No. 47 *issued by the State Supervisor of Hydraulics, and that said right to the use of said ground waters has been perfected in accordance with the laws of Washington, and is hereby confirmed by the State Supervisor of Hydraulics of Washington and entered of record in Volume* 1 *at page* 286-A; *that the right hereby confirmed dates from* January 12, 1946; *that the quantity of ground water under the right hereby confirmed for the purposes aforesaid, is limited to an amount actually beneficially used for said purposes, and shall not exceed* 300 gallons per minute; 160 acre-feet per year

A description of the lands to which such ground water right is appurtenant, and the place where such water is put to beneficial use, is as follows:

The Town of Marysville, Snohomish County, Washington.

The right to the use of the ground water aforesaid hereby confirmed is restricted to the lands or place of use herein described, except as provided in Sections 6 and 7, Chapter 122, Laws of 1929.

WITNESS the seal and signature of the State Supervisor of Hydraulics affixed this 21st *day of* April, *19*49.

Thos. Birkhead

S. F. No. 7354—6-45—5C. 0235.

STATE OF WASHINGTON
DEPARTMENT OF CONSERVATION AND DEVELOPMENT
DIVISION OF HYDRAULICS

Permit to Appropriate Public Ground Waters of the State of Washington

Book No. 1 of Ground Water Permits, on page 47 under Application No. 83

TOWN OF MARYSVILLE

of Marysville, Washington

is hereby granted a permit to appropriate the following described public ground waters of the State of Washington, subject to existing rights, and to the limitations and provisions set out herein.

Priority date of this permit is January 12, 1946

Source of the proposed ground water appropriation is Well

within ..... area, ... sub-area

..... zone. Name or number of works is .....

Quantity of water appropriated shall be limited to the amount which can be beneficially applied and not to exceed 300 gallons per minute; 160 acre-feet per year, to be used for the following purposes: Municipal supply

as more definitely set out below.

Location of the well, tunnel, or infiltration trench is 500 feet North and 1000 feet East of the Southwest corner of ~~NW¼~~ SW¼ of Sec. 24

being within SW¼ of SW¼ (Amended 7-22-46 and readvertised) ~~SW¼ of NW¼~~ of Sec. 24, Twp. 31 N., Rge. 4 E.W.M.

county of Snohomish

Use, or uses to which water is to be applied:

For municipal supply: 300 gallons per minute; 160 acre-feet per year, to supply The Town of Marysville

For irrigation: ..... gallons per minute; ..... acre-feet per year, for the irrigation of ..... acres.

For miscellaneous uses: ..... gallons per minute; ..... acre-feet per year, for .....

LEGAL DESCRIPTION OF PROPERTY ON WHICH WATER IS TO BE USED

The Town of Marysville, Snohomish County, Washington

DESCRIPTION OF WORKS FROM WHICH WATER IS TO BE WITHDRAWN

The well will be drilled and have a diameter of 8 inches, and depth of 150 feet.
(Dug or drilled)

Description of tunnel or infiltration trench:

(Please read carefully provisions below)

Particular specifications required by the Supervisor of Hydraulics for the purpose of preventing waste of public waters:

Construction work shall begin on or before March 1, 1947

and shall thereafter be prosecuted with reasonable diligence and completed on or before March 1, 1948

and complete application of water to proposed use shall be made on or before March 1, 1949

Given under my hand and the seal of this office at Olympia, Washington, this 11th day of March, 19 46

RODNEY RYKER
State Supervisor of Hydraulics.

By: Chas J Bartholet
CHAS. J. BARTHOLET, Deputy

REPORT OF FINDINGS ON GROUND WATER APPLICATION NO. 83

NAME TOWN OF MARYSVILLE

Date of Examination February 18, 1946

Location: SW¼ of NW¼ of Sec. 24, Twp. 31 N., Rge. 4 E.W.M.

Quantity applied for 300 g.p.m. _____ acre-feet per year

Use: Municipal supply

Irrigable acreage: Present _____ Planned _____ Feasible _____

Municipal: Population 1907 as of 1945

Industrial: _____

Type of Works: Well X Infiltration trench _____ Tunnel _____

Dimensions: 8" by 150'

Progress of Works: _____

Time Pump Will Be Operated: Daily

Other Water Rights of Applicant: Surface water right from Edwards Creek 2.3 c.f.s.

Proximity to existing works, springs or streams: 70 ft. from stream bed and 8' above; Springs 50 to 1000 ft. away and 5-20 ft. higher.

Estimated effect of withdrawal of water on existing water rights:

None as well is intended to tap water below spring water and will not affect springs.

Water Bearing Zone: Below spring water zone

RECOMMENDATIONS

Approved for: 300 g.p.m. 160 acre feet per year, subject to existing water rights.

The above well will be used about four months of the year to supplement the spring supply.

Signed this 27th day of March, 1946

Fred B Roberts

FRED B. ROBERTS
Ground Water Geologist
Division of Hydraulics

S. F. No. 7356—6-45—5C. 9238.

RECORD BY WELL DRILLER OR OTHER CONSTRUCTOR OF WORKS FOR WITHDRAWAL OF GROUND WATER

RECEIVED
JUL 31 1946
DIVISION OF HYDRAULICS

Under Permit No. G. W. 47

("The well driller or other constructor of works for the withdrawal of public ground waters shall be obligated to furnish the permittee a certified record of the factual information necessary to show compliance with the provisions of this section." Sec. 8, Chap. 263, Laws of 1945.)

1. Town of Marysville, Marysville, Washington
(Name and address of owner of well or other works for withdrawal of water)

2. Nature of works from which water is withdrawn Well
(Well, tunnel, or infiltration trench)

3. Name or number of works (if any)

4. Date on which work on well or other structure was started May 1, 1946

5. Date on which work was completed JULY 10 1946

6. If work on well or other structure was abandoned, give date —

and reason for abandonment —

7. DESCRIPTION OF WORKS:

(a) WELL: Depth 203 ft. Diameter 8 in. or ft. Dug or drilled Drilled

Flowing ~~or pump well~~ 40 g.p.m.

IF PUMP WELL: Type and size of pump is Tested with Air Lift.

Type and size of motor or engine is

Depth from ground surface to water level before pumping Flowing 40 g.p.m. feet above surface

After continuous operation for at least four hours, the measured discharge of the pump is 250 g.p.m., and the drawdown of water level is 40 feet

Date of test July 8, 1946

IF FLOWING WELL: Measured discharge g.p.m., on (Date)

Shut-in pressure at ground surface lbs. per sq. in. on (Date)

Water is controlled by Cap, & Valve outlets
(Cap, valve, etc.)

CASING: (Give diameter, commercial specifications and depth below ground surface of each casing size.)

10 in. diameter 32# Republic Drive Pipe from Surface to 80 ft.

8 in. diameter 25# Republic Drive Pipe from Surface to 208 ft.

in. diameter 6" Test Hole Drilled from 208 to 358 ft.

6" & 8" Pipe Salvaged after test. in. diameter from to ft.

Describe and show depth of shoe, plug, adapter, liner or other details: 8" Pipe Plugged Back to 203' with Steel Capped Piling Plug - Drives Thru Shale into Clay - & 100 H.P. Lead Plug Drilled Solid on top of Steel Plate.

Perforated casing or screens:

180 Perforations - with Mills from to ft.
(Number per foot and size of perforations, or describe screen)

Perforated from 164' to 173' from 164 to 173 ft.
average size 1/4 x 2

from to ft.

LOG OF WELL: (Describe each stratum or formation clearly, indicate if water bearing, and give thickness and depth as indicated.)

MATERIAL	Thickness (Feet)	Depth to Bottom (Feet)
Surface to 60 Wet Sand & gravel.	60	60
60 to 80' Coarse Water Sand & Heavy gravel	20	80
over Flow 65 g.p.m. Estimated Pumping		
capacity after Development 500 g.p.m.		
80' To 96' Med. Sand & gravel	16	96
96' To 102 Clay Hard Pan	6	102
102 to 120' Coarse Water Sand & gravel	18	120
over Flow 20 g.p.m. Estimated Pumping		
capacity after Development 500 g.p.m.		
120' To 150 Tight Clay and Silty Sand Layers	30	150
150' To 164 Med. Sand & Pea gravel	14	164
164 To 174 Coarse Water Sand & Heavy gravel 50-50	10	174
174' To 255 - Tight Clay and Sand Layers.	81	255 [Estimated Yield - 50 g.p.m.
~~255 To 262 Sharp Water Sand 10% Pea gravel~~	7	262
262' To 358 alternate Layers, Clay & Silty Sand	96	358

(b) INFILTRATION TRENCH: Covered or open.....

Dimensions: Length.....ft. Minimum depth.....ft. Maximum depth.....ft.

Bottom width.....ft. Discharge.....g.p.m. Date of test.....

(c) TUNNEL: Type of lining.....

Dimensions: .....
(Length, course, and cross-sectional size)

Position of water bearing stratum with reference to portal of tunnel.....

LOG OF TUNNEL: (Preceding table for log of well may be used if desired. Give footage from portal and character of materials, as pertinent.)

C. E. Miller
(Signature of well driller or other constructor)

.....
(Address)

STATE OF WASHINGTON,
County of Snohomish } ss.

I, C. E. Miller, being first duly sworn, do hereby certify that I am the driller or constructor of the aforesaid well or tunnel or trench who furnished the foregoing statement of facts; that I have read said statement and each and all of the items therein contained are true to the best of my knowledge and belief.

C. E. Miller
(Signature)

Subscribed and sworn to before me this 22 day of July, 1946

C. Chadwick

S. F. No. 1854-A—6-45—3M. 9183.

SECTION PLAT

Sec. 24 Twp. 31 N. R. 4

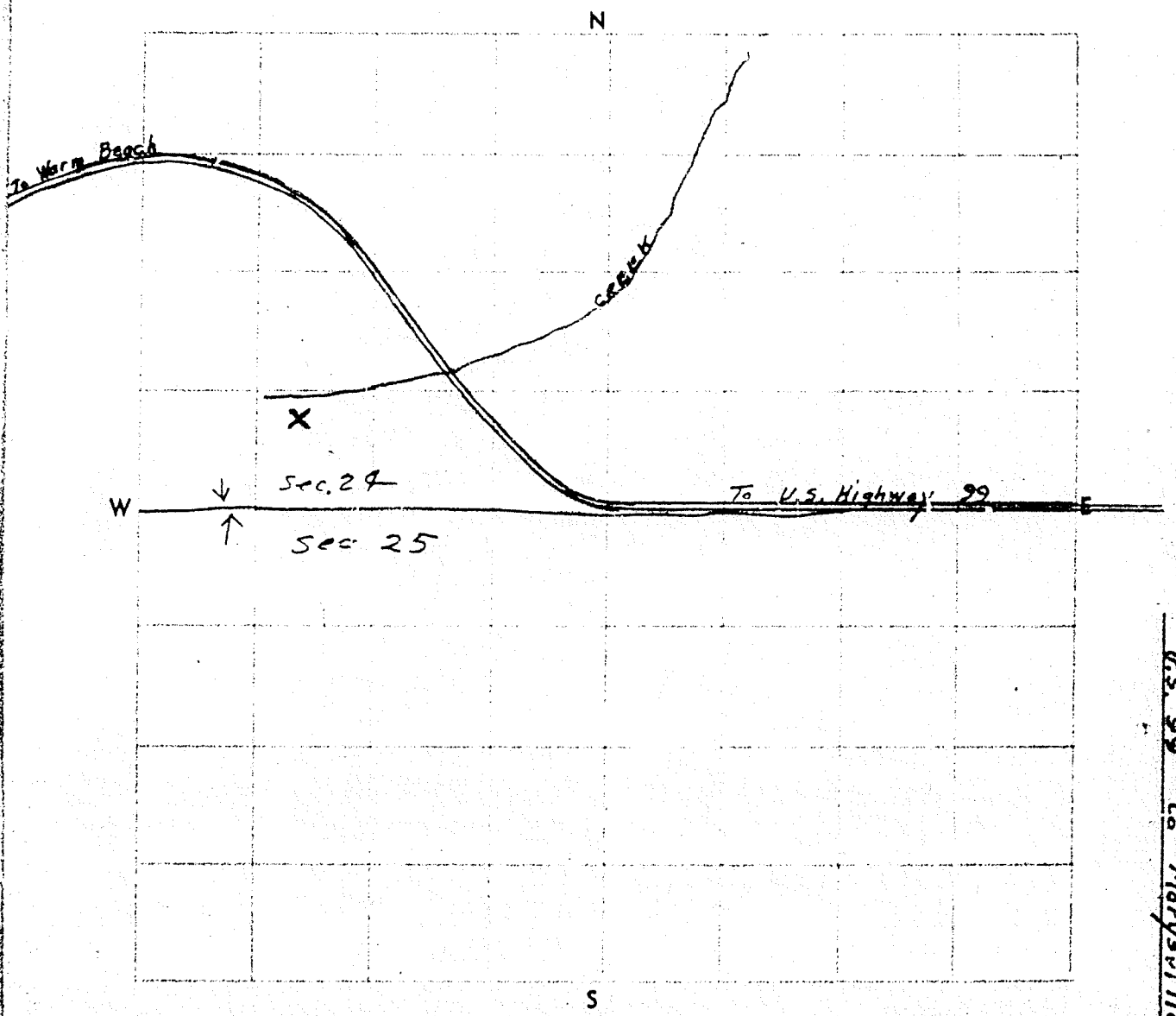

Show by a cross (X) the location of the well or other works covered by the application or declaration. Show by circle (O) the locations of other wells or works within a quarter of a mile. Also traveling directions from nearest town on main highway.

Scale: 1 inch = 800 feet.

RECEIVED
JAN 12 1948
DIVISION OF
HYDRAULICS

ED. SPRINGS WELL #1
MARCH 7, 1952
300 GPM

1152

S. P. No. 7361—3-51—1M. 27763.

CERTIFICATE RECORD No 3 PAGE No. 1152-A

STATE OF WASHINGTON, COUNTY OF Snohomish

Certificate of Ground Water Right

Issued in accordance with the provisions of Chapter 263 Laws of Washington for 1945, and amendments thereto, and the rules and regulations of the State Supervisor of Water Resources thereunder.

THIS IS TO CERTIFY THAT TOWN OF MARYSVILLE, WASHINGTON

of ______, has made proof to the satisfaction of the State Supervisor of Water Resources of Washington, of a right to the use of the ground waters of a well

located within the SW¼ of SW¼ of Sec. 34, Twp. 31 N., Rge. 4 E.W.M.

for the purpose of municipal supply

under and subject to provisions contained in Ground Water Permit No. 2224 issued by the State Supervisor of Water Resources and that said right to the use of said ground waters has been perfected in accordance with the laws of Washington, and is hereby confirmed by the State Supervisor of Water Resources of Washington and entered of record in Volume 3 at page 1152-A, that the right hereby confirmed dates from March 7, 1952; that the quantity of ground water under the right hereby confirmed for the purposes aforesaid, is limited to an amount actually beneficially used for said purposes, and shall not exceed 300 gallons per minute; 320 acre-feet per year. ~~xxxxxxxxxxxxxxxxxxxxxxxxxx acres.~~

A description of the lands to which such ground water right is appurtenant, and the place where such water is put to beneficial use, is as follows:

Town of Marysville, Washington.

The right to the use of the ground water aforesaid hereby confirmed is restricted to the lands or place of use herein described, except as provided in Sections 6 and 7, Chapter 122, Laws of 1929.

WITNESS the seal and signature of the State Supervisor of Water Resources affixed this 5th day of August, 1952.

[signature]
State Supervisor of Water Resources

S. F. No. 7354—3-51—75C. 27751.

STATE OF WASHINGTON
DEPARTMENT OF CONSERVATION AND DEVELOPMENT
DIVISION OF WATER RESOURCES

Permit to Appropriate Public Ground Waters of the State of Washington

Book No. 5 of Ground Water Permits, on page 2224 under Application No. 2391

TOWN OF MARYSVILLE, WASHINGTON

is hereby granted a permit to appropriate the following described public ground waters of the State of Washington, subject to existing rights, and to the limitations and provisions set out herein.

Priority date of this permit is March 7, 1952

Source of the proposed ground water appropriation is A well

within ..... area, ... sub-area

..... zone. Name or number of works is .....

Quantity of water appropriated shall be limited to the amount which can be beneficially applied and not to exceed 300 gallons per minute; 320 acre-feet per year, to be used for the following purposes: municipal supply

as more definitely set out below.

Location of the well, tunnel, or infiltration trench is 500 feet North and 1000 feet East of the Southwest corner of the SW¼ of Sec. 24

being within the SW¼ of SW¼ of Sec. 24, Twp. 31 N., Rge. 4 E.W.M.

county of Snohomish

Use, or uses to which water is to be applied:

For municipal supply: 300 gallons per minute; 320 acre-feet per year, to supply the Town of Marysville.

For irrigation: ..... gallons per minute; ..... acre-feet per year, for the irrigation of ..... acres.

For miscellaneous uses: ..... gallons per minute; ..... acre-feet per year, for .....

LEGAL DESCRIPTION OF PROPERTY ON WHICH WATER IS TO BE USED

Town of Marysville, Washington

DESCRIPTION OF WORKS FROM WHICH WATER IS TO BE WITHDRAWN

The well will be drilled (Dug or drilled) and have a diameter of 10 inches, and depth of 175 feet.

Description of tunnel or infiltration trench:

(Please read carefully provisions below)

Particular specifications required by the Supervisor of Water Resources for the purpose of preventing waste of public waters:

Construction work shall begin on or before Started

and shall thereafter be prosecuted with reasonable diligence and completed on or before Completed

and complete application of water to proposed use shall be made on or before June 1, 1953

Given under my hand and the seal of this office at Olympia, Washington, this 20th day of June, 19 52.

Chas. H. Martheet

State Supervisor of Water Resources

Report of Examination on Ground Water

Received date 3-7-52 Date of exam. 4-1-52 Appli. No. 2391

Name Town of Marysville Address City Hall, Marysville, Washington

Type of works well Dimensions 10" x 173'

Progress of works Complete and in use.

Quantity ~~xxxxxxxx~~ applied for 300 g.p.m. 320 acre-feet per year

Legal sub. SW¼ SW¼ Sec. 24 Twp. 31 N. Rge. 4 E. County Snohomish

Use municipal supply

Irrigation-acreage: Present Planned Feasible

Municipal: Population as of

Industrial

Time pump will be operated continuously

Other water rights appurtenant to this land G.W. Cert. #286-A; S.W. Cert. #184, 2180.

Proximity to existing works, springs, wells, or streams Edwards Creek North 75'. Elev. 25' below to stream.

Area Sub-area Zone

RECOMMENDATIONS

Approved for 300 g.p.m. 320 acre-feet per year, subject to existing water rights. (1 acre-foot 325,850 gallons.)

The total withdrawal from all sources held by the Town of Marysville shall not exceed 1120 acre-feet annually, the requirement for a population of 5000 persons.

This application is for additional water from an existing well. Such would place the well on a full time withdrawal basis rather than the standby use now being made of same under G.W. Cert. #286-A.

Issue as recommended subject to existing rights and provisions.

Signed this 26th day of May, 1952.

Fred D. Hahn

FRED D. HAHN
Engineer

8" well 1946

S. F. No. 7356—3-51—5M. 27752.

RETURN TO:
DIV. OF WATER RESOURCES
406 TRANSPORTATION BLDG., OLY[redacted]

RECEIVED
DEPARTMENT OF
CONSERVATION & DEVELOPMENT

RECORD BY WELL DRILLER OR OTHER CONSTRUCTOR OF WORKS FOR WITHDRAWAL OF GROUND WATER

Under Permit No. G. W. 2224

("The well driller or other constructor of works for the withdrawal of public ground waters shall be obligated to furnish the permittee a certified record of the factual information necessary to show compliance with the provisions of this section." Sec. 8, Chap. 263, Laws of 1945.)

1. Town Of Marysville
(Name and address of owner of well or other works for withdrawal of water)

2. Type; name or number of works where water is taken Well
(Well, tunnel or infiltration trench)

3. Date on which work on well or other structure was started April 30, 1946

4. Date on which work was completed June 24, 1946

5. If work on well or other structure was abandoned, give date —

and reason for abandonment —

6. DESCRIPTION OF WORKS:

(a) WELL: Depth 204 ft. Diameter 8 in. or ft. Dug or drilled Drilled

Flowing or pump well Pump

IF PUMP WELL: Type and size of pump is 300 g.p.m. Turbine

Type and size of motor or engine is 7½ H.P. Motor

Depth from ground surface to water level before pumping 20 g.p.m. Flow

After continuous operation for 6 (At least four) hours, the measured discharge of the pump is 300 g.p.m., and the drawdown of water level is 38½ feet

Recovery data (taken after pump has been shut off) (time taken as zero when pump turned off) (water level measured from well top to water level)

Time	Water Level	Time	Water Level

Date of test about June 20, 1952

IF FLOWING WELL: Measured discharge 20 g.p.m. on June 20. (Date)

Shut-in pressure at ground surface ____ lbs. per sq. in. on ____ (Date)

Water is controlled by Flow Line To Tank House (Cap, valve, etc.)

CASING: (Give diameter, commercial specifications and depth below ground surface of each casing size.)

Std. Wt. 10 in. diameter 1 ft above Surface from to 80'-6" ft.

" " 8 in. diameter " " " from to 204 ft.

____ in. diameter from to ft.

____ in. diameter from to ft.

Perforated casing or screen:

183 cuts with Mills Perforator - 165 ft. to 174 ft. 1/4 x 2 1/2 slots, 6 cuts to Row. from 165 to 174 ft.

(Number per foot and size of perforations, or describe screen)

from ..... to ..... ft.

from ..... to ..... ft.

from ..... to ..... ft.

from ..... to ..... ft.

LOG OF WELL OR TUNNEL: (Describe each stratum or formation clearly, indicate if water bearing, and give thickness and depth as indicated.)

MATERIAL	Thickness (Feet)	Depth to bottom (Feet)
Peat and Sand	20	20
Med. gray Sand	14	34
" " " 10% Pea. Grav	18	52
" " "	7	59
Loose Water Sand and Grav 20-30	10	69
Med. to Heavy gravel	10	79
Tight gravel Layer & Clay	5	84
Med. Sand & Grav - Clay layers	18	102
Coarse Sand & Med. gravel	20	122
Tight Clay	2	124
Dirty Sand & Clay with Hard layers	40	164
Tight Heavy water grav	12	172
" Blue Clay	36	208

(b) INFILTRATION TRENCH OR TUNNEL: Type .....

Dimensions: .....
(Tunnel—length, course, and cross-sectional size) (Trench—minimum and maximum depths)

Bottom width ..... ft. Discharge ..... g.p.m. Date of test .....

Position of water bearing stratum with reference to portal of tunnel .....

C. E. Miller
(Signature of well driller or other constructor)

1320 Rucker Ave
Everett, Wash
(Address)

STATE OF WASHINGTON,
County of Snohomish } ss.

I, C. E. Miller, being first duly sworn, do hereby certify that I am the driller or constructor of the aforesaid well or tunnel or trench who furnished the foregoing statement of facts; that I have read said statement and each and all of the items therein contained are true to the best of my knowledge and belief.

C. E. Miller
(Signature)

Subscribed and sworn to before me this 30th day of June, 1952

MARCH 7, 1952
500 GPM
EDWARDS SPRINGS WELL #2

S. F. No. 7341—3-53—3M. 34100.

2096

CERTIFICATE RECORD NO. 5 PAGE NO. 2096-A

STATE OF WASHINGTON, COUNTY OF Snohomish

Certificate of Ground Water Right

Issued in accordance with the provisions of Chapter 263, Laws of Washington for 1945, and amendments thereto, and the rules and regulations of the State Supervisor of Water Resources thereunder.

THIS IS TO CERTIFY *That* TOWN OF MARYSVILLE, WASHINGTON

, *has made proof to the satisfaction of the State Supervisor of Water Resources of Washington, of a right to the use of the ground waters of a* well

located within the SW¼ of SW¼ of Sec. 24, Twp. 31 N., Rge. 4 E.W.M.

for the purpose of municipal supply

under and subject to provisions contained in Ground Water Permit No. 5223 *issued by the State Supervisor of Water Resources and that said right to the use of said ground waters has been perfected in accordance with the laws of Washington, and is hereby confirmed by the State Supervisor of Water Resources of Washington and entered of record in Volume* 5 *at page* 2096-A; *that the right hereby confirmed dates from* March 7, 1952; *that the quantity of ground water under the right hereby confirmed for the purposes aforesaid, is limited to an amount actually beneficially used for said purposes, and shall not exceed* 500 gallons per minute; 800 acre-feet per year for municipal supply.

A description of the lands to which such ground water right is appurtenant, and the place where such water is put to beneficial use, is as follows:

The Town of Marysville and adjacent territory.

The right to the use of the ground water aforesaid hereby confirmed is restricted to the lands or place of use herein described, except as provided in Sections 6 and 7, Chapter 122, Laws of 1929.

WITNESS the seal and signature of the State Supervisor of Water Resources affixed this 28th *day of* December, 19 54.

M Walter
State Supervisor of Water Resources.

S. F. No. 7254—3-51—75C. 27751.

STATE OF WASHINGTON
DEPARTMENT OF CONSERVATION AND DEVELOPMENT
DIVISION OF WATER RESOURCES

Permit to Appropriate Public Ground Waters of the State of Washington

Book No. 5 of Ground Water Permits, on page 2223 under Application No. 2379

TOWN OF MARYSVILLE, WASHINGTON

~~or~~

is hereby granted a permit to appropriate the following described public ground waters of the State of Washington, subject to existing rights, and to the limitations and provisions set out herein.

Priority date of this permit is March 7, 1952

Source of the proposed ground water appropriation is a well

within ..... area, ... sub-area

..... zone. Name or number of works is .....

Quantity of water appropriated shall be limited to the amount which can be beneficially applied and not to exceed 500 gallons per minute; 800 acre-feet per year, to be used for the following purposes: municipal supply

as more definitely set out below.

Location of the well, tunnel, or infiltration trench is 1200 feet East and 500 feet North of Southwest corner of Sec. 24

being within the SW¼ of SW¼ of Sec. 24, Twp. 31 N., Rge. 4 E.W.M.

county of Snohomish

Use, or uses to which water is to be applied:

For municipal supply: 500 gallons per minute; 800 acre-feet per year, to supply the Town of Marysville and adjacent territory.

For irrigation: ..... gallons per minute; ..... acre-feet per year, for the irrigation of ..... acres.

For miscellaneous uses: ..... gallons per minute; ..... acre-feet per year, for .....

LEGAL DESCRIPTION OF PROPERTY ON WHICH WATER IS TO BE USED

The Town of Marysville and adjacent territory

DESCRIPTION OF WORKS FROM WHICH WATER IS TO BE WITHDRAWN

The well will be drilled and have a diameter of 10 inches, and depth of 87 feet.
(Dug or drilled)

Description of tunnel or infiltration trench:

(Please read carefully provisions below)

Particular specifications required by the Supervisor of Water Resources for the purpose of preventing waste of public waters:

Construction work shall begin on or before June 1, 1953

and shall thereafter be prosecuted with reasonable diligence and completed on or before December 1, 1953

and complete application of water to proposed use shall be made on or before December 1, 1954

Given under my hand and the seal of this office at Olympia, Washington, this 20th day of June, 1952.

Chas. Barlock
State Supervisor of Water Resources

Report of Examination on Ground Water

Received date 3-7-52 Date of exam. 4-1-52 Appli. No. 2379

Name Town of Marysville Address Marysville, Washington

Type of works well Dimensions 10" x 87'

Progress of works Not begun

Quantity applied for 500 g.p.m. acre-feet per year

Legal sub. SW¼ SW¼ Sec. 24 Twp. 31 N. Rge. 4 E. County Snohomish

Use municipal supply

Irrigation-acreage: Present Planned Feasible

Municipal: Population as of

Industrial

Time pump will be operated continuously

Other water rights appurtenant to this land S.W. Cert. #184; 2180; G.W. Cert. #286-A

Proximity to existing works, springs, wells, or streams Town of Marysville W. 150'. 50' S. of Edwards Creek, elev. 25' higher. Springs 700' W.

Area Sub-area Zone

RECOMMENDATIONS

Approved for 500 g.p.m. 800 acre-feet per year, subject to existing water rights. (1 acre-foot 325,850 gallons.)

The total withdrawal from all sources held by the Town of Marysville shall not exceed 1120 acre-feet annually, the requirement for a population of 5000 persons.

The applicant will furnish information to this office as to the size and type of equipment installed and the gallons per minute furnished.

The installation of an access port to well, as described in attached Ground Water Bulletin No. 1, is recommended.

The above calculation is based on each person requiring 200 gallons per day, for an estimated population of 5000 by 1960.

Issue as recommended subject to existing rights and provisions.

Signed this 26th day of May, 1952.

Fred D. Hahn

FRED D. HAHN
Engineer

No. 7358—3-51—5M. 27752.

RETURN TO:
DIV. OF WATER RESOURCES
406 TRANSPORTATION BLDG., OLYMPIA

RECORD BY WELL DRILLER OR OTHER CONSTRUCTOR OF WORKS FOR WITHDRAWAL OF GROUND WATER

Under Permit No. G. W. 2223

("The well driller or other constructor of works for the withdrawal of public ground waters shall be obligated to furnish the permittee a certified record of the factual information necessary to show compliance with the provisions of this section." Sec. 8, Chap. 263, Laws of 1945.)

1. Town Of Marysville
(Name and address of owner of well or other works for withdrawal of water)

2. Type; name or number of works where water is taken Well
(Well, tunnel or infiltration trench)

3. Date on which work on well or other structure was started April 16 1952

4. Date on which work was completed May 20 1952

5. If work on well or other structure was abandoned, give date —

and reason for abandonment —

6. DESCRIPTION OF WORKS:

(a) WELL: Depth 131'-6" ft. Diameter 10 in. or ft. ~~Dug or~~ drilled Drilled

Flowing or pump well Pump

IF PUMP WELL: Type and size of pump is 500 g.p.m. Turbine

Type and size of motor or engine is 7 1/2 H.P. Motor

Depth from ground surface to water level before pumping 75 g.p.m. Flow.

After continuous operation for 6 (At least four) hours, the measured discharge of the pump is 300 g.p.m., and the drawdown of water level is 39 feet

Recovery data (taken after pump has been shut off) (time taken as zero when pump turned off) (water level measured from well top to water level)

Time	Water Level	Time	Water Level

Date of test By Air Lift, May. 16. 1952

IF FLOWING WELL: Measured discharge 75 g.p.m. on May 20. 1952 (Date)

Shut-in pressure at ground surface — lbs. per sq. in. on — (Date)

Water is controlled by Flow Line To Tank House. (Cap, valve, etc.)

CASING: (Give diameter, commercial specifications and depth below ground surface of each casing size.)

Std. 10 in. diameter 1 ft. above Surface to 109 ft.

Std. 8 in. diameter Perforated liner from 105 to 131'-6" ft.

in. diameter from to ft.

in. diameter from to ft.

Describe and show depth of shoe, plug, adapter, liner or other details:

Perforated casing or scr

8" Standard Wt. Pipe from 109 to 131-6 ft.

(Number per foot and size of perforations, or describe screen)

Perforated with 3/16 X 6" Slots from to ft.

on 2" Centers and 1/4 X 6" Slots on from to ft.

2" Centers To Equal to Exceed the from to ft.

area of Pipe Per ft. from to ft.

LOG OF WELL OR TUNNEL: (Describe each stratum or formation clearly, indicate if water bearing, and give thickness and depth as indicated.)

MATERIAL	Thickness (Feet)	Depth to bottom (Feet)
Soil and Sand	10	10
Sand and Gravel	40	50
Coarse " " "		
Tight Gravel and Layers of Hard Pan	40	90
Water Sand and Gravel	9	99
Tight Clay	3	102
Sandy "	3	105
Water Sand and Fine Gravel	5	110
Coarse Sand and Gravel	10	120
Loose Uniform Well Gravel	12	132
Tight Clay Hard Pan	2	134

(b) INFILTRATION TRENCH OR TUNNEL: Type ——

Dimensions: ——

(Tunnel—length, course, and cross-sectional size) (Trench—minimum and maximum depths)

Bottom width — ft. Discharge — g.p.m. Date of test ——

Position of water bearing stratum with reference to portal of tunnel ——

C. E. Miller

(Signature of well driller or other constructor)

1820 Rucker Ave.

(Address) Everett Wn.

STATE OF WASHINGTON.

County of Snohomish } ss.

I, C. E. Miller, being first duly sworn, do hereby certify that I am the driller or constructor of the aforesaid well or tunnel or trench who furnished the foregoing statement of facts; that I have read said statement and each and all of the items therein contained are true to the best of my knowledge and belief.

C. E. Miller

(Signature)

Subscribed and sworn to before me this 30th day of June, 1952

G. H. Rucklord

LAJOY #1 - CEDAR CREST GOLF
MAY 5, 1955
57 GPM

S. F. No. 7341—5-60—3M. 32306.

CERTIFICATE RECORD No. 9 PAGE No. 4155-A

STATE OF WASHINGTON, COUNTY OF Snohomish

Certificate of Ground Water Right

Issued in accordance with the provisions of Chapter 263, Laws of Washington for 1945, and amendments thereto, and the rules and regulations of the State Supervisor of Water Resources thereunder.

THIS IS TO CERTIFY *That* TOWN OF MARYSVILLE, WASHINGTON

XX, *has made proof to the satisfaction of the State Supervisor of Water Resources of Washington, of a right to the use of the ground waters of a* well *located within* NW¼NW¼ *Sec.* 26, *Twp.* 30 *N., R.* 5 E. *W. M.,* *for the purpose of* municipal water supply *under and subject to provisions contained in Ground Water Permit No.* 3763 *issued by the State Supervisor of Water Resources and that said right to the use of said ground waters has been perfected in accordance with the laws of Washington, and is hereby confirmed by the State Supervisor of Water Resources of Washington and entered of record in Volume* 9 *at page* 4155-A; *that the right hereby confirmed dates from* May 5, 1955; *that the quantity of ground water under the right hereby confirmed for the purposes aforesaid, is limited to an amount actually beneficially used for said purposes, and shall not exceed* 57 gallons per minute; 91 acre-feet per year for municipal water supply.

Special provisions required by the Supervisor of Water Resources: The total yearly withdrawal authorized from all sources held by the Town of Marysville shall not exceed 1344 acre-feet; the requirement for a population of 6000 people.

A description of the lands to which such ground water right is appurtenant:

Town of Marysville, Snohomish County, Washington.

The right to the use of the ground water aforesaid hereby confirmed is restricted to the lands or place of use herein described, except as provided in Sections 6 and 7, Chapter 122, Laws of 1929.

WITNESS the seal and signature of the State Supervisor of Water Resources affixed this 23rd *day of* March, 1962.

M. J. Walton

S. F. No. 7354—3-54—5M. 29179.

STATE OF WASHINGTON

DEPARTMENT OF CONSERVATION AND DEVELOPMENT

DIVISION OF WATER RESOURCES

Permit to Appropriate Public Ground Waters of the State of Washington

Book No. 8 of Ground Water Permits, on page 3763 under Application No. 3964

TOWN OF MARYSVILLE, WASHINGTON,

or

is hereby granted a permit to appropriate the following described public ground waters of the State of Washington, subject to existing rights, and to the limitations and provisions set out herein.

Priority date of this permit is May 5, 1955

Source of the proposed ground water appropriation is a well

within _____ area, _____ sub-area

_____ zone. Name or number of works is _____

Quantity of water appropriated shall be limited to the amount which can be beneficially applied and not to exceed 57 gallons per minute; 91 acre-feet per year, to be used for the following purposes: municipal water supply

as more definitely set out below.

Location of the well, tunnel, or infiltration trench is 1250 feet East and 350 feet South of Northwest corner of Sec. 26

being within the NW¼ of NW¼ of Sec. 26, Twp. 30 N., Rge. 5 E.W.M.

county of Snohomish

Use, or uses to which water is to be applied:

For municipal supply: 57 gallons per minute; 91 acre-feet per year, to supply the Town of Marysville.

For irrigation: _____ gallons per minute; _____ acre-feet per year, for the irrigation of _____ acres.

For miscellaneous uses: _____ gallons per minute; _____ acre-feet per year, for _____

LEGAL DESCRIPTION OF PROPERTY ON WHICH WATER IS TO BE USED

Town of Marysville, Snohomish County, Washington.

DESCRIPTION OF WORKS FROM WHICH WATER IS TO BE WITHDRAWN

The well will be drilled (Dug or drilled) and have a diameter of 10 inches, and depth of 653 feet.

Description of tunnel or infiltration trench:

(Please read carefully provisions below)

Particular specifications required by the Supervisor of Water Resources:

The total yearly withdrawal authorized from all sources held by the Town of Marysville shall not exceed 1344 acre-feet; the requirement for a population of 6000 people.

Construction work shall begin on or before Started

and shall thereafter be prosecuted with reasonable diligence and completed on or before March 1, 1957 Ext 3-1-58 3-1-59 3-1-60 3-1-61 3-1-62

and complete application of water to proposed use shall be made on or before 1963 March 1, ~~1958~~

Given under my hand and the seal of this office at Olympia, Washington, this 26th day of August, 1955.

M G Weeks

State Supervisor of Water Resources

Report of Examination on Ground Water

Received date 5-5-55 Date of exam. 7-15-55 Appl. No. 3984

Name Town of Marysville Address Marysville, Washington

Type of works well Dimensions 10" x 653'

Progress of works Started in that well has been drilled

Quantity ~~claimed or~~ applied for 57 g.p.m. acre-feet per year

Legal sub NW¼ NW¼ Sec. 26 Twp. 30 N. Rge. 5 E. County Snohomish

Use municipal water supply

Irrigation-acreage: Present 6 ~~5000~~ Planned Feasible

Municipal: Population 2693 as of 1955 1965

Industrial

Time pump will be operated continuously

Other water rights appurtenant to this land See below

Proximity to existing works, springs, wells, or streams

Area Sub-area Zone

RECOMMENDATIONS

Approved for 57 g.p.m. 91 acre-feet per year, subject to existing water rights. (1 acre-foot 325,850 gallons.)

At the present time the Town of Marysville holds the following recorded rights:

GROUND WATER

Certificate #286 for 300 g.p.m. and 160 acre-feet per year.
" #1152 for 300 g.p.m. and 320 acre-feet per year.
" #2096 for 500 g.p.m. and 800 acre-feet per year.

SURFACE WATER

Certificate #184 for 360 g.p.m. and 576 acre-feet per year.
" #2180 for 1,035 g.p.m. and 1,656 acre-feet per year.

Under the above rights, the applicant is entitled to a maximum diversion of 3.5928 million gallons per day and a total yearly appropriation of 3,512 acre-feet per year. However, approval of the prior ground water applications was subject to an acre-foot restriction based on an assumed water requirement of 200 gallons per person per day.

In view of the prior rights held by the applicant, permit shall issue subject to the following provision: "The total yearly withdrawal authorized from all sources held by the Town of Marysville shall not exceed 1120 acre-feet annually. The requirement for a population of 5000 people."

It should be noted that at the present time the Town is diverting approximately 1.3 million gallons per day from all sources and a portion of this quantity is discharged unused to the Snohomish River.

The installation of an access port to well as described in attached Ground Water Bulletin No. 1, is recommended.

Signed this 21st day of July, 1955.

Glen H. Fiedler

GLEN H. FIEDLER, Engineer
Division of Water Resources

RETURN TO:
DIV. OF WATER RESOURCES
[illegible]

S. F. No. 7330—1-33—3M. 33590.

RECORD BY WELL DRILLER OR OTHER CONSTRUCTOR OF WORKS FOR WITHDRAWAL OF GROUND WATER

Under Permit No. G. W. 3984 - 3763 -

("The well driller or other constructor of works for the withdrawal of public ground waters shall be obligated to furnish the permittee a certified record of the factual information necessary to show compliance with the provisions of this section." Sec. 8, Chap. 263, Laws of 1945.)

1. Town Of Marysville Snoq. Co. Wash.
(Name and address of owner of well or other works for withdrawal of water)

2. Type; name or number of works where water is taken Drilled Well
(Well, tunnel or infiltration trench)

3. Date on which work on well or other structure was started 4/7/1954

4. Date on which work was completed 10/20/1954

5. If work on well or other structure was abandoned, give date —

and reason for abandonment —

6. DESCRIPTION OF WORKS:

(a) WELL: Depth 657 ft. Diameter 6" in. or ft. ~~Bored~~ or drilled ✓

Flowing or pump well Pump Water Temp. not checked. Estimate 50°

IF PUMP WELL: Type and size of pump is not installed at this date.

Type and size of motor or engine is —

Depth from ground surface to water level before pumping 30 (1-11-55) feet

After continuous operation for 4 (At least four) hours, the measured discharge of the test pump is 57 g.p.m., and the drawdown of water level is 265 feet

Recovery data (taken after pump has been shut off) (time taken as zero when pump turned off) (water level measured from well top to water level)

Time	Water Level	Time	Water Level
not	checked		

Date of test 1/11/1955

IF FLOWING WELL: Measured discharge — g.p.m. on — (Date)

Shut-in pressure at ground surface — lbs. per sq. in. on — (Date)

Water is controlled by Pipe is Capped - 1' above Surface (Cap, valve, etc.)

CASING: (Give diameter, commercial specifications and depth below ground surface of each casing size.)

10 in. diameter 32# Pvc. A.T. from 0 to 55 ft.
8 in. diameter 25# " " from 55 to 390 ft.
6 in. diameter 19# " " from 326 to 644 ft.
6" in. diameter "Johnson" Everdur Screen from 644 to 657 ft.

~~Describe and~~ show depth of shoe, plug, adapter, liner or other details:

Perforated casing or screens:

8" Pipe - 112 Cuts 3/8 x 2 (Mills Perforated) from 80 to 106 ft.
(Number per foot and size of perforations, or describe screen)

from ..... to ..... ft.

Edward E. Johnson Inc. Everett from ..... to ..... ft.

Screen No. 60 Slot - Closed Bottom from ..... to ..... ft.

11" x 5" Std. Pipe Liner, Packer at Top from 644 to 657 ft.
(13' of Screen Exposed & 5 Sand)

LOG OF WELL OR TUNNEL: (Describe each stratum or formation clearly, indicate if water bearing, and give thickness and depth as indicated.)

MATERIAL	Thickness (Feet)	Depth to bottom (Feet)
Hard Pan	65	65
Water Gravel	1	66
Tight gravel - showing Water Seams	44	110
Clay Hard Pan	64	174
Hard Pan layers - Sandy Clay layers & wood	226	400
Tight Hard Pan	72	472
Hard Pan layers, Sand layers showing Water	78	550
Stiff Blue Clay	52	602
Fine (wet) Silty Sand	31	633
Sharp Gray Water Sand	3	636
Coarse Crushed Granite Sand - 10% fine Sand	21	657
Sandy Clay Bottom	1	658
(Detailed log and screen analysis enclosed with file; Chem. analysis enclosed with file)		

(b) INFILTRATION TRENCH OR TUNNEL: Type ——

Dimensions: ..... (Tunnel—length, course, and cross-sectional size) ..... (Trench—minimum and maximum depths)

Bottom width ..... ft. Discharge ..... g.p.m. Date of test .....

Position of water bearing stratum with reference to portal of tunnel .....

Sec 26 T 30 R 5E

D (40 A) — fm

(Signature of well driller or other constructor)

C. E. Miller

(Address)

1320 Rucker Ave.
Everett Wash.

STATE OF WASHINGTON,

County of ..... } ss.

I, ..., being first duly sworn, do hereby certify that I am the driller or constructor of the aforesaid well or tunnel or trench who furnished the foregoing statement of facts; that I have read said statement and each and all of the items therein contained are true to the best of my knowledge and belief.

C. E. Miller
(Signature)

NOTARY

S. F. No. 1834-B—1-53—10M. 33463.

SECTION PLAT

Sec. 26 Twp. 30 N. R. 5

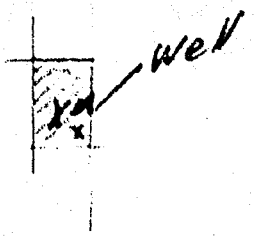

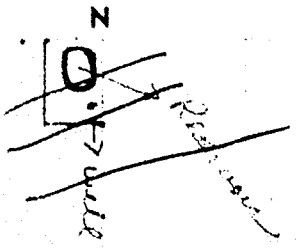

RECEIVED
MAY 5 1955
DIV. OF WATER
RESOURCES

W E

S

Show by a cross (X) the location of the well or other works covered by the application. Show by circle (O) the locations of other wells or works within a quarter of a mile. Also indicate traveling directions from nearest town on main highway.

Scale: 1 inch = 800 feet.

3984

Supersede #1
FEB 14, 1956
1,000 GPM

Cert 3100

S. F. No. 7361—1-57—3M. 47578.

CERTIFICATE RECORD NO. 7 PAGE NO. 3100-A

STATE OF WASHINGTON, COUNTY OF Snohomish

Certificate of Ground Water Right

Issued in accordance with the provisions of Chapter 263, Laws of Washington for 1945, and amendments thereto, and the rules and regulations of the State Supervisor of Water Resources thereunder.

THIS IS TO CERTIFY *That* TOWN OF MARYSVILLE, WASHINGTON,

~~or~~ ....., *has made proof to the satisfaction of the State Supervisor of Water Resources of Washington, of a right to the use of the ground waters of a* well *located within* the S½ of Lot 3 *Sec.* 2, *Twp.* 29 *N., R.* 5 E. *W. M.* *for the purpose of* municipal water supply *under and subject to provisions contained in Ground Water Permit No.* 3943 *issued by the State Supervisor of Water Resources and that said right to the use of said ground waters has been perfected in accordance with the laws of Washington, and is hereby confirmed by the State Supervisor of Water Resources of Washington and entered of record in Volume* 7 *at page* 3100-A; *that the right hereby confirmed dates from* February 14, 1956; *that the quantity of ground water under the right hereby confirmed for the purposes aforesaid is limited to an amount actually beneficially used for said purposes, and shall not exceed* 1000 gallons per minute; 1344 acre-feet per year for municipal water supply.

A description of the lands to which such ground water right is appurtenant, and the place where such water is put to beneficial use, is as follows:

Town of Marysville, Snohomish County, Washington.

The right to the use of the ground water aforesaid hereby confirmed is restricted to the lands or place of use herein described, except as provided in Sections 6 and 7, Chapter 122, Laws of 1929.

WITNESS the seal and signature of the State Supervisor of Water Resources affixed this 30th *day of* June, *19* 58.

M Walker
State Supervisor of Water Resources.

ENGINEERING DIV.

S. F. No. 7354—8-54—5M. 39179.

STATE OF WASHINGTON

DEPARTMENT OF CONSERVATION AND DEVELOPMENT

DIVISION OF WATER RESOURCES

Permit to Appropriate Public Ground Waters of the State of Washington

Book No. 8 of Ground Water Permits, on page 3943 under Application No. 6221

TOWN OF MARYSVILLE, WASHINGTON

~~or~~

is hereby granted a permit to appropriate the following described public ground waters of the State of Washington, subject to existing rights, and to the limitations and provisions set out herein.

Priority date of this permit is February 14, 1956

Source of the proposed ground water appropriation is a well

within ..... area, ... sub-area

..... zone. Name or number of works is .....

Quantity of water appropriated shall be limited to the amount which can be beneficially applied and not to exceed 1000 gallons per minute; 1344 acre-feet per year, to be used for the following purposes: municipal water supply

as more definitely set out below.

Location of the well, tunnel, or infiltration trench is 1400 feet East and 1200 feet South of northwest corner, sec. 2

being within the S½ of Lot 3, sec. 2, T.29 N., R.5 E.W.M.

county of Snohomish

Use, or uses to which water is to be applied:

For municipal supply: 1000 gallons per minute; 1344 acre-feet per year, to supply the Town of Marysville

For irrigation: ..... gallons per minute; ..... acre-feet per year, for the irrigation of ..... acres.

For miscellaneous uses: ..... gallons per minute; ..... acre-feet per year, for .....

LEGAL DESCRIPTION OF PROPERTY ON WHICH WATER IS TO BE USED

Town of Marysville, Snohomish County, Washington.

DESCRIPTION OF WORKS FROM WHICH WATER IS TO BE WITHDRAWN

The well will be drilled (Dug or drilled) and have a diameter of 10 inches, and depth of 267 feet.

Description of tunnel or infiltration trench:

(Please read carefully provisions below)

Particular specifications required by the Supervisor of Water Resources:

The total annual withdrawal authorized from all sources shall not exceed 1344 acre-feet.

Construction work shall begin on or before Started

and shall thereafter be prosecuted with reasonable diligence and completed on or before

Completed

and complete application of water to proposed use shall be made on or before

May 1, 1957 - Ext. 5-1-58

Given under my hand and the seal of this office at Olympia, Washington, this 30th day of April, 1956.

M D Walker

State Supervisor of Water Resources

Report of Examination on Ground Water

Received date 2-14-56 Date of exam 3-8-56 Appli. No. 422

Name Town of Marysville, Wash. ~~XXXXX~~ (H.F. Pfromm, Town Clerk)

Type of works well Dimensions 10" X 267'

Progress of works well completed

Quantity ~~XXXXXX~~ applied for 1000 g.p.m. acre-feet per year

Legal sub. S½ Lot 3 Sec. 2 Twp. 29 N. Rge. 5 E. County Snohomish

Use municipal water supply

Irrigation-acreage: Present Planned Feasible

Municipal: Population 6000 as of 1965

Industrial

Time pump will be operated continuously

Other water rights appurtenant to this land G.W. Cert. 286, 1152 & 2096. S.W. Cert. 184 & 2180

Proximity to existing works, springs, wells, or streams none within ½ mile

Area Sub-area Zone

RECOMMENDATIONS

Approved for 1000 g.p.m. acre-feet per year, subject to existing water rights. (1 acre-foot 325,850 gallons.)

At the present time the Town of Marysville holds the following recorded rights:

Ground Water
- Certificate #286 for 300 g.p.m. limited to 160 acre-feet per year
- Certificate #1152 for 300 g.p.m. limited to 320 acre-feet per year
- Certificate #2096 for 500 g.p.m. limited to 800 acre-feet per year
- Permit #3763 for 57 g.p.m. limited to 91 acre-feet per year

Surface Water
- Certificate #184 for 360 g.p.m. limited to 576 acre-feet per year
- Certificate #2180 for 1035 g.p.m. limited to 1656 acre-feet per year

Thus a total diversion and withdrawal of 3603 acre-feet per year is authorized under the above instruments.

The total requirements for a municipal population of 6000 based on a per capita daily consumption of 200 gallons, is equal to 1344 acre-feet annually.

Therefore, permit should issue for a continuous withdrawal of up to 1000 g.p.m. and limited to the maximum requirement of 1344 acre-feet annually, with the

provision that "the total annual withdrawal authorized from all sources shall not exceed 1344 acre-feet.

Signed this 10th day of April, 1956.

Stuart E. Shumway

STUART E. SHUMWAY, Engineer
Division of Water Resources

RETURN TO:
DIV. OF WATER RESOURCES
406 TRANSPORTATION BLDG., OLYMPIA

Summaries
RECEIVED
DEPARTMENT OF CONSERVATION
JUN 16 1958

A. F. No. 7336—1-53—5M. 33500.

RECORD BY WELL DRILLER OR OTHER CONSTRUCTOR OF WORKS FOR WITHDRAWAL OF GROUND WATER

Under Permit No. G. W. 3943 - app no. 4221

AM 7,8,9,10,11,12,1,2,3,4,5,6 PM

("The well driller or other constructor of works for the withdrawal of public ground waters shall be obligated to furnish the permittee a certified record of the factual information necessary to show compliance with the provisions of this section" Sec. 8, Chap. 263, Laws of 1945.)

1. City of Marysville
(Name and address of owner of well or other works for withdrawal of water)

2. Type; name or number of works where water is taken No 1. Well
(Well, tunnel or infiltration trench)

3. Date on which work on well or other structure was started Nov. 20, 1955

4. Date on which work was completed Feb. 10, 1956.

5. If work on well or other structure was abandoned, give date —

and reason for abandonment —

6. DESCRIPTION OF WORKS:

(a) WELL: Depth 267 ft. Diameter 10 in. or ft. Dug or drilled Drilled

Flowing or pump well Pump.

IF PUMP WELL: Type and size of pump is 1000 g.p.m. Turbine

Type and size of motor or engine is —

Depth from ground surface to water level before pumping 130 feet

After continuous operation for 4 (At least four) hours, the measured discharge of the pump is 450 g.p.m., and the drawdown of water level is 10 feet

Recovery data (taken after pump has been shut off) (time taken as zero when pump turned off) (water level measured from well top to water level)

Time	Water Level	Time	Water Level
—	—	—	—

Date of test Feb. 3, 1956

IF FLOWING WELL: Measured discharge — g.p.m. on — (Date)

Shut-in pressure at ground surface — lbs. per sq. in. on — (Date)

Water is controlled by — (Cap, valve, etc.)

CASING: (Give diameter, commercial specifications and depth below ground surface of each casing size.)

12 in. diameter Std. W.T. + from Surface to 160 ft.

10 in. diameter " " " from " to 221 ft.

10 in. diameter Screen & Liner from 221 to 267 ft.

in. diameter from to ft.

Describe and show depth of shoe, plug, adapter, liner or other details:

Perforated casing or screens:

Ed E Johnson Inc. Everdur from ..... to ..... ft.
(Number per foot and size of perforations, or describe screen)

Screen-no 60 from 221 to 267 ft.

5x8" Pipe Extension Liner from ..... to ..... ft.

on Top, 3'x8" Blank Bottom from ..... to ..... ft.

Liner from 264 to 267 ft.

LOG OF WELL OR TUNNEL: (Describe each stratum or formation clearly, indicate if water bearing, and give thickness and depth as indicated.)

MATERIAL	Thickness (Feet)	Depth to bottom (Feet)
Hard Pan	120	120
Sandy Clay	40	160
Stiff Blue "	40	200
Hard Pan Clay	18	218
Coarse Sand &		
Med Gravel 30-50		
Laced with Layers of		
Tight Hard Pan	49	267

(b) INFILTRATION TRENCH OR TUNNEL: Type .....

Dimensions: .....
(Tunnel—length, course, and cross-sectional size) (Trench—minimum and maximum depths)

Bottom width ..... ft. Discharge ..... g.p.m. Date of test .....

Position of water bearing stratum with reference to portal of tunnel .....

.....
(Signature of well driller or other constructor)

C. E. Miller
(Address)

STATE OF WASHINGTON,
County of ..... } ss.

I, ..., being first duly sworn, do hereby certify that I am the driller or constructor of the aforesaid well or tunnel or trench who furnished the foregoing statement of facts; that I have read said statement and each and all of the items therein contained are true to the best of my knowledge and belief.

NOTARIZATION

.....
(Signature)

S. F. No. 1834-B—1-53—10M. 33465.

SECTION PLAT

Sec. 2 Twp. 29 N. R. 5 EWM

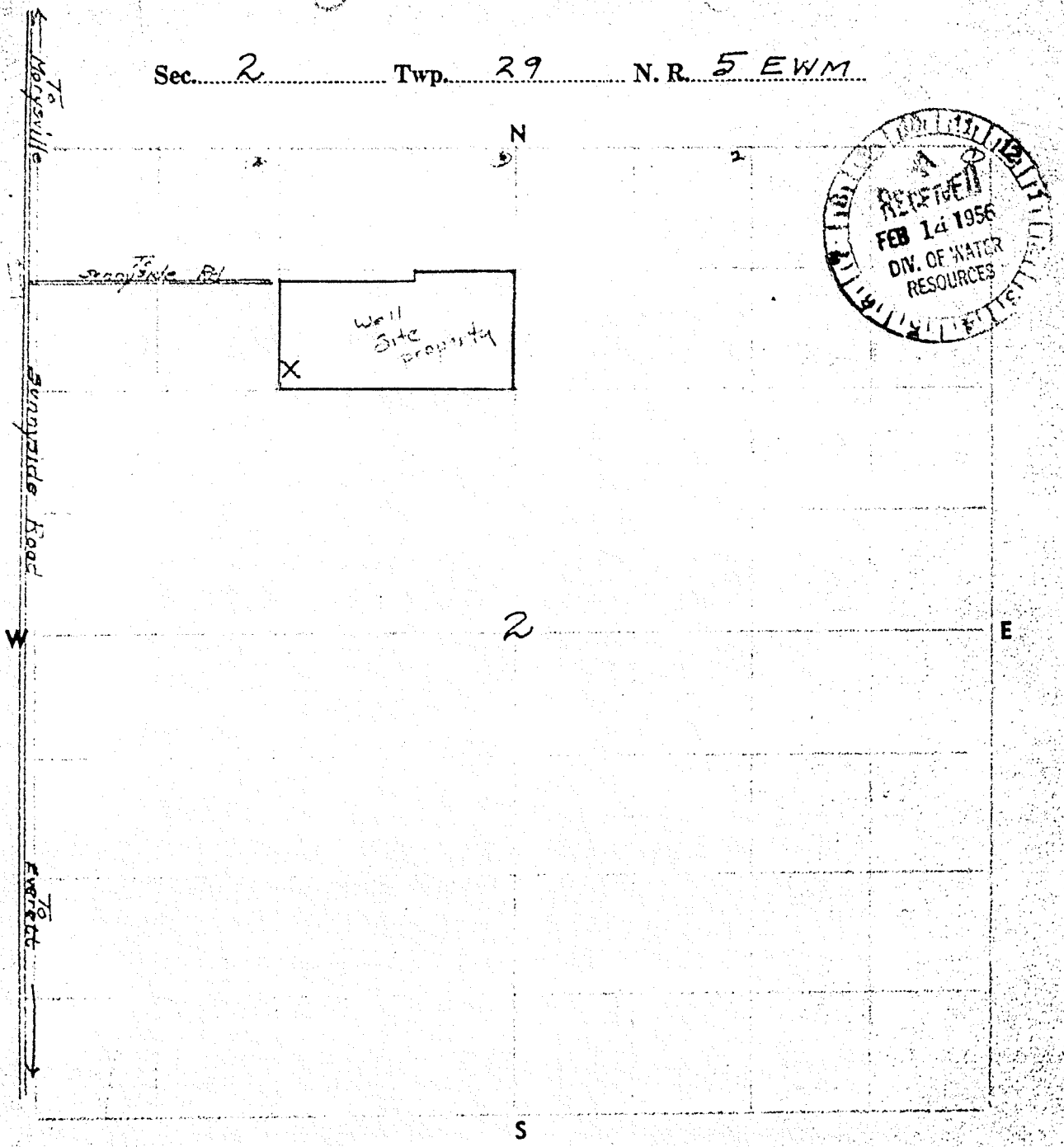

RECEIVED FEB 14 1956 DIV. OF WATER RESOURCES

Show by a cross (X) the location of the well or other works covered by the application. Show by circle (O) the locations of other wells or works within a quarter of a mile. Also indicate traveling directions from nearest town on main highway.

Scale: 1 inch = 800 feet.

4221

S. F. No. 7361—1-64—3M. 83360.

SOUNDSIDE #2
JULY 27, 1964
1,000 GPM

CERTIFICATE RECORD NO. 11 PAGE NO. 5469-A

STATE OF WASHINGTON, COUNTY OF Snohomish

Cert 5469

Certificate of Ground Water Right

Issued in accordance with the provisions of Chapter 163, Laws of Washington for 1945, and amendments thereto, and the rules and regulations of the State Supervisor of Water Resources thereunder.

THIS IS TO CERTIFY *That* THE CITY OF MARYSVILLE

of Marysville, Washington, *has made proof to the satisfaction of the State Supervisor of Water Resources of Washington, of a right to the use of the ground waters of a* well

located within Government Lot 3

Sec. 2, *Twp.* 29 *N., R.* 5 *E., W.M.,*

for the purpose of municipal supply

under and subject to provisions contained in Ground Water Permit No. 6864 *issued by the State Supervisor of Water Resources and that said right to the use of said ground waters has been perfected in accordance with the laws of Washington, and is hereby confirmed by the State Supervisor of Water Resources of Washington and entered of record in Volume* 11 *at page* 5469-A; *that the right hereby confirmed dates from* July 27, 1964; *that the quantity of ground water under the right hereby confirmed for the purposes aforesaid, is limited to an amount actually beneficially used for said purposes, and shall not exceed* 1000 gallons per minute; 1176 acre-feet per year for municipal supply.

Special provisions required by the Supervisor of Water Resources: The total withdrawal under this right shall not exceed 1176 acre-feet per year, less any amount diverted to this use under existing rights.

A description of the lands to which such ground water right is appurtenant:

City of Marysville, Marysville, Washington.

The right to the use of the ground water aforesaid hereby confirmed is restricted to the lands or place of use herein described, except as provided in Sections 6 and 7, Chapter 122, Laws of 1929.

WITNESS the seal and signature of the State Supervisor of Water Resources affixed this 22nd *day of* July, 19 66

Robert H. Mundt

A. F. N. 1354—OS—1-63

STATE OF WASHINGTON
DEPARTMENT OF CONSERVATION
DIVISION OF WATER RESOURCES

Permit to Appropriate Public Ground Waters of the State of Washington

Book No. 14 of Ground Water Permits, on page 6664 under Application No. 7276

THE CITY OF MARYSVILLE

of Marysville, Washington

is hereby granted a permit to appropriate the following described public ground waters of the State of Washington, subject to existing rights, and to the limitations and provisions set out herein.

Priority date of this permit is July 27, 1964

Source of the proposed ground water appropriation is a well

within _____ area, _____ sub-area

_____ zone. Name or number of works is _____

Quantity of water appropriated shall be limited to the amount which can be beneficially applied and not to exceed 1,500 gallons per minute; 117.6 acre feet per year, to be used for the following purposes: Municipal supply

as more definitely set out below.

Location of the well, tunnel, or infiltration trench is 710 feet west and 893 feet south from north quarter corner of Sec.2

being within Government Lot 3, Sec.2, T.29 N., R.5 E.W.M.

county of Snohomish

Use, or uses to which water is to be applied:

For municipal supply: 1,500 gallons per minute; ~~117.5~~ 117.6 acre-feet per year, to supply a population of 7,000 as of 1980.

For irrigation: _____ gallons per minute; _____ acre-feet per year, for the irrigation of _____ acres.

For miscellaneous uses: _____ gallons per minute; _____ acre-feet per year, for _____

LEGAL DESCRIPTION OF PROPERTY ON WHICH WATER IS TO BE USED

CITY OF MARYSVILLE, Marysville, Washington

DESCRIPTION OF WORKS FROM WHICH WATER IS TO BE WITHDRAWN

The well will be drilled (Dug or drilled) and have a diameter of 12 inches, and depth of 250 feet.

Description of tunnel or infiltration trench:

(Please read carefully provisions below)

Particular specifications required by the Supervisor of Water Resources: The total withdrawal under this right shall not exceed 1,176 acre-feet per year, less any quantity diverted to this use under existing rights.

Construction work shall begin on or before Started

and shall thereafter be prosecuted with reasonable diligence and completed on or before

January 1, 1965

and complete application of water to proposed use shall be made on or before

January 1, 1967

Given under my hand and the seal of this office at Olympia, Washington, this 14th day of January, 1965.

M G Walker

State Supervisor of Water Resources

Report of Examination on Ground Water

Received date July 27, 1964 Date of exam. September 16, 1964 Appli. No. 7276

Name City of Marysville Address Marysville, Washington

Type of works a well Dimensions 16" x 219'

Progress of works being drilled (219'), setting screen (SWL: 130')

Quantity applied for 1,500 g.p.m. acre-feet per year

Government Legal sub. Lot 3 Sec. 2 Twp. 29 N. Rge. 5 E.W.M. County Snohomish

Use Municipal supply

Irrigation-acreage: Present Planned Feasible

Municipal: Population 7,000 as of 1980

Industrial

Time pump will be operated continuously

Other water rights appurtenant to this land G.W. Cert. 3100 (see findings for other rights)

Proximity to existing works, springs, wells, or streams City of Marysville, south 52° west 575 feet; Tidemann, south 31° west 860 feet.

Area Sub-area Zone

RECOMMENDATIONS

Approved for 1,500 g.p.m. ~~117.6~~ 1176 acre-feet per year, subject to existing water rights. (1 acre-foot 325,850 gallons.)

The City of Marysville presently enjoys title to water under the following recorded rights:

Ground Water Certificate No.				286:	300 gpm	and 160 acre-feet per year
"	"	"	"	1152:	300	320
"	"	"	"	2096:	500	800
"	"	"	"	3100:	1000	1344
"	"	"	"	4155:	57	91
Surface Water Certificate No.				184	0.80 cfs (360 gpm)	and 576 acre-feet
"	"	"	"	2180	2.30 (1035 gpm)	1656

The water requirements for municipal supply is calculated on the basis of a per capita consumption of 0.168 acre-feet per year (150 gallons per day), or a total of 1,176 acre-feet annually for a projected 1980 population of 7,000 persons.

1600 AF/yr

(over)

Therefore permit shall issue as supplemental to the extent that "the total withdrawal under this right shall not exceed 1.176 acre-feet per year, less any quantity diverted to this use under existing rights."

The installation of an access port to well as described in attached Ground Water Bulletin No. 1 is recommended.

Use of the water to be appropriated under this application will be for a public water supply. State Board of Health rules require every owner of a public water supply to obtain written approval from the State Director of Health prior to any new construction or alterations of a public water supply. The applicant is advised to contact the Washington State Department of Health, Fourth Floor, Public Health Building, Olympia, with regard to the need for compliance.

Signed at Olympia, Washington
on this 20 day of November, 1964.

D. H. Lauer
[illegible] McNeill, Geologist
Division of Water Resources

WATER WELL REPORT
STATE OF WASHINGTON

File Original and First Copy with the Division of Water Resources
Second Copy — Owner's Copy
Third Copy — Driller's Copy

Application No. 7276
Permit No. 6864

(1) OWNER:
Name City of Marysville
Address City Hall, Marysville, Wash

(2) LOCATION OF WELL: Sunnyside Well #2
County Snohomish Owner's number, if any
S, govt. lt. 3 ¼ Section 2 T. 29N R. 5EWM W.M.
Bearing and distance from section or subdivision corner
~~1 mile W. 3/4 m. N of Frontier Village~~
210' W of 825 S of N/4 corner Sec 2

(3) TYPE OF WORK (check):
New Well ☒ Deepening ☐ Reconditioning ☐ Abandon ☐
If abandonment, describe material and procedure in Item 11.

(4) PROPOSED USE (check):
Domestic ☐ Industrial ☐ Municipal ☒
Irrigation ☐ Test Well ☐ Other ☐

(5) TYPE OF WELL:
Rotary ☐ Driven ☐
Cable ☒ Jetted ☐
Dug ☐ Bored ☐

(6) CASING INSTALLED: Threaded ☐ Welded ☐
16" Diam. from 0 ft. to 338 ft. Gage 74 lb
16" pulled back to 318 ft. Gage 3/8" plus
" Diam. from ft. to ft. Gage

(7) PERFORATIONS: Perforated? ☐ Yes ☒ No
Type of perforation
Additional remarks; Well was first
SIZE of perforations screened and tested at 218 ft.
This area presaturated by well 150 ft.
away, and not not a virgin aquifer.
Except to break bldrs water at 170 ft.
the tools were never in the hole
from 170 ft depth, except for 218 ft.
~~to 228 ft, bailed down.~~

(8) SCREENS: Well screen installed ☒ Yes ☐ No
Manufacturer's Name Johnson
Type Stainless Model No.
Diam. 15" Slot size 60 Set from 318 ft. to 338 ft.
Diam. Slot size Set from ft. to ft.

(9) CONSTRUCTION:
Was well gravel packed? ☐ Yes ☒ No Size of gravel:
Gravel placed from ft. to ft.
Was a surface seal provided? ☒ Yes ☐ No To what depth? 20 ft.
Material used in seal Cement
Did any strata contain unusable water? ☐ Yes ☒ No
Type of water? Depth of strata
Method of sealing strata off

(10) WATER LEVELS:
Static level 132 ft. below land surface Date Jan 13/65
Artesian pressure lbs. per square inch Date
Water is controlled by (Cap, valve, etc.)

(11) WELL TESTS: Drawdown is amount water level is lowered below static level
Was a pump test made? ☒ Yes ☐ No If yes, by whom H. O. Meyer DR Co
Yield 1220 gal./min. with 39.5 ft. drawdown after 4 hrs.
" 1050 " 33 " 4 "
" " " "
Recovery data (time taken as zero when pump turned off) (water level measured from well top to water level)

Time	Water Level	Time	Water Level
4:15	160	4:27	132
4:15½	153	From 4:15-4:20 Pumped at	
4:20	152	640 g.p.m. 4:20-4:25 pmpd.	
4:25	142	320 g.p.m.	

Date of Jan. 13/65
Bailer test 60 gal./min. with 0 ft. drawdown after hrs.
Artesian flow g.p.m. Date
Temperature of water 50 Was a chemical analysis made? ☒ Yes ☐ No

(12) WELL LOG: Diameter of well 16 inches.
Depth drilled 338 ft. Depth of completed well 338 ft.
Formation: *Describe by color, character, size of material and structure, and show thickness of aquifers and the kind and nature of the material in each stratum penetrated, with at least one entry for each change of formation.*

MATERIAL	FROM	TO
Top soil	0	2
sand, gr. and some sed	2	29
Br. sd. and gr. hardpan	29	35
lt. tan HP. sdy. cl. little gr	35	42
crse gr. wet	42	46
dry rusty crse gr	46	55
crse gr and pea gr. sm sd	55	85
Br. sand and clay	85	98
sm. br. cl. silty sd and gr.	98	109
grey silt fne sd and gr	109	136
blue clay 136-150 bl. cl & gr	136	160
sd. fne gr and silt crse gr	160	178
fne & crse sd, med & crse g	178	205
crse sand and gr.	205	218
Blue grey Hardpan	218	226
br. sand & gr	226	236
grey bl. sand and crse gr	236	285
grey crse sd. and gr	285	338

Work started 8/17/64 19 Completed 1/14/65 19

(13) PUMP:
Manufacturer's Name
Type: H.P.

Well Driller's Statement:
This well was drilled under my jurisdiction and this report is true to the best of my knowledge and belief. H O Meyer Driller

NAME H. O. Meyer Drilling Co (Person, firm, or corporation) (Type or print)
6124 Lake Wash. Blvd. N.E.
Address Kirkland Wash
[Signed] H. O. Meyer (Well Driller)
License No. 223-02-7583580 Date Jan 21, 1965

(USE ADDITIONAL SHEETS IF NECESSARY)

S. F. No. 7356—(Rev. 9-62)—8-62—5M. 75168.

OK WRL

S. F. No. 1334-B—OS—5-60—10M

SECTION PLAT

Sec. 2 Twp. 29N N. R. 5 E. W.M.

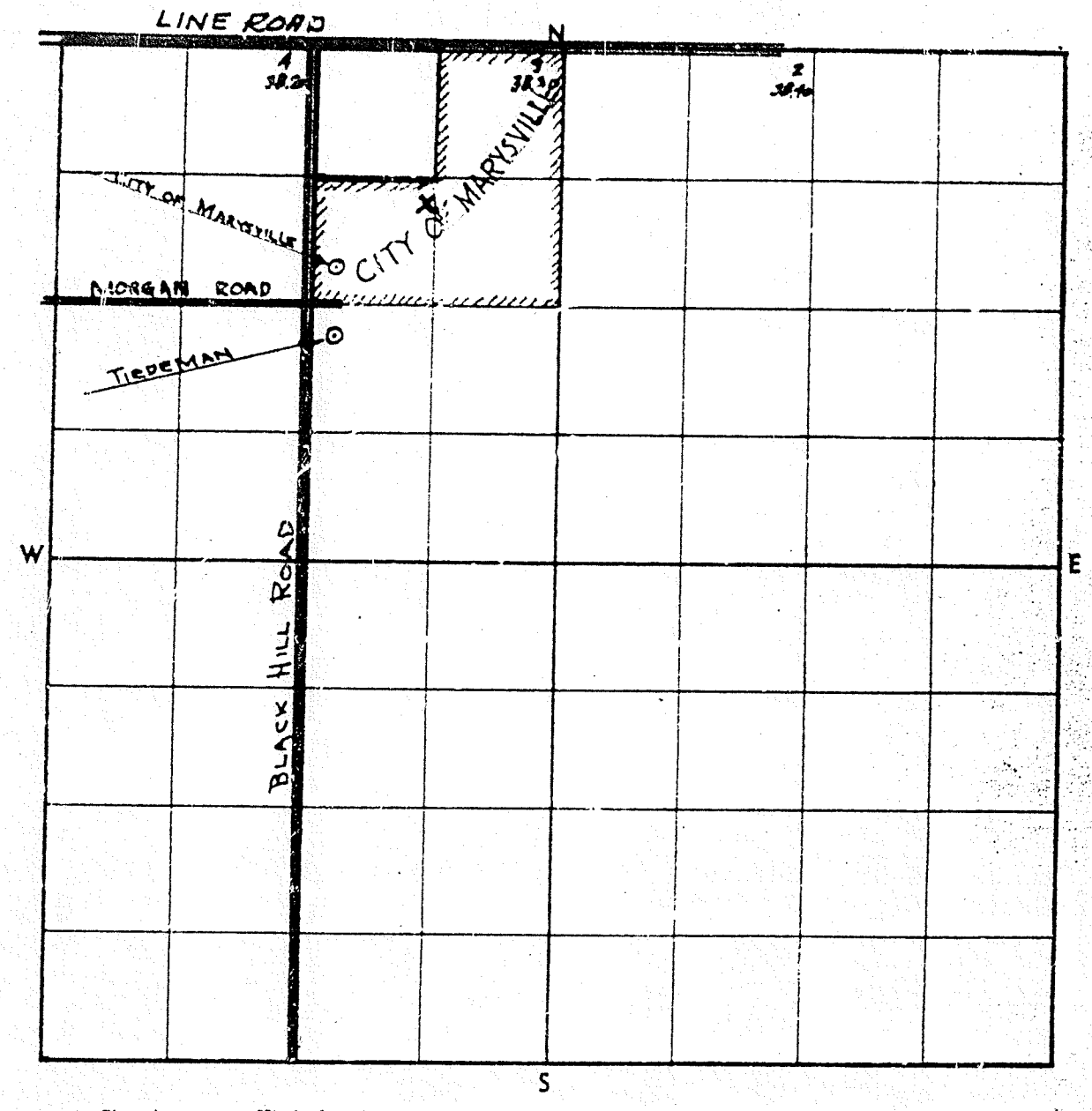

Show by a cross (X) the location of the well or other works covered by the application. Show by circle (O) the locations of other wells or works within a quarter of a mile. Also indicate traveling directions from nearest town on main highway.

Scale: 1 inch = 800 feet.

Follow Third Street and "Sunnyside Road" easterly and southerly from intersection of Third and State Streets in Marysville 2.6 miles to Morgan Road. Turn left (east) on Morgan Road to Black Hill Road and southwest corner of City property. Road ends opposite existing well and pump station. (Obtain keys from Water Superintendent to enter watershed property.)

7276

S. F. No. 7361—(Rev. 6-70)

CERTIFICATE RECORD NO. 14, PAGE NO. 6980-A

LAKE GOODWIN #1
JUNE 19, 1967
550 GPM
Cert 6980

STATE OF WASHINGTON, COUNTY OF Snohomish

CERTIFICATE OF GROUND WATER RIGHT

(Issued in accordance with the provisions of Chapter 263, Laws of Washington for 1945, and amendments thereto, and the rules and regulations of the Department of Ecology thereunder.)

THIS IS TO CERTIFY *That* CITY OF MARYSVILLE

of Marysville, Washington, *has made proof to the satisfaction of the Department of Ecology of a right to the use of the public ground waters of the State of Washington from* a well

located within NW¼SE¼SW¼

Sec. 22, *Twp.* 31 *N., R.* 4 E. *W.M.,*

for the purpose(s) of municipal supply

under and specifically subject to provisions contained in Ground Water Permit No. 8276

issued by the Department of Ecology and that said right to the use of said ground waters has been perfected in accordance with the laws of Washington, and is hereby confirmed by the Department of Ecology and entered of record in Volume 14 *at page* 6980-A; *that the priority of the right hereby confirmed dates from* June 19, 1967; *that the quantity of ground water under the right hereby confirmed for the aforesaid purposes, is limited to an amount actually beneficially used for said purposes, and shall not exceed* 550 gallons per minute, 880 acre-feet per year, during entire year, for municipal supply.

A description of the lands to which such ground water right is appurtenant is as follows:

City of Marysville.

The right to use of water aforesaid hereby confirmed is restricted to the lands or place of use herein described, except as provided in RCW 90.03.380, 90.03.390 and 90.44.020.

This certificate of ground water right is specifically subject to relinquishment for nonuse of water as provided in RCW 90.14.180.

Given under my hand and seal of this office at Olympia, Washington, this 2nd *day of* September, *19* 70.

JOHN A. BIGGS, *Director*
Department of Ecology

Engineering Data

Glen H. Kadler

S. F. No. 1334—OS—6-67.

STATE OF WASHINGTON
DEPARTMENT OF WATER RESOURCES
DIVISION OF WATER MANAGEMENT

Permit to Appropriate Public Ground Waters of the State of Washington

Book No. 17 of Ground Water Permits, on page 3276 under Application No. 8803

CITY OF MARYSVILLE

of Marysville, Washington

is hereby granted a permit to appropriate the following described public ground waters of the State of Washington, subject to existing rights, and to the limitations and provisions set out herein.

Priority date of this permit is June 19, 1967

Source of the proposed ground water appropriation is a well

within area. sub-area

zone. Name or number of works is

Quantity of water appropriated shall be limited to the amount which can be beneficially applied and not to exceed 2000 gallons per minute; 3225 acre-feet per year, to be used for the following purposes: municipal supply

as more definitely set out below.

Location of the well, tunnel, or infiltration trench is 1203 feet west and 1138 feet north from south quarter corner of Sec. 22

being within NW¼SE¼SW¼ of Sec. 22, T. 31 N., R. 4 E.W.M.

county of Snohomish

Use, or uses to which water is to be applied:

For municipal supply: 2000 gallons per minute; 3225 acre-feet per year, to supply City of Marysville continuously each year

For irrigation: gallons per minute; acre-feet per year, for the irrigation of acres.

For miscellaneous uses: gallons per minute; acre-feet per year, for

LEGAL DESCRIPTION OF PROPERTY ON WHICH WATER IS TO BE USED

City of Marysville

DESCRIPTION OF WORKS FROM WHICH WATER IS TO BE WITHDRAWN

The well will be drilled (Dug or drilled) and have a diameter of 16 inches, and depth of 450 feet.

Description of tunnel or infiltration trench:

Please read carefully provisions below)

Particular specifications required by the Department of Water Resources for the purpose of preventing waste of public waters: 1) Issued as a primary right for 1768 acre-feet per year and as a supplemental right for 1437 acre-feet per year, the total annual withdrawal and diversion from all rights shall not exceed 3600 acre-feet. 2) The installation of an access port as described in attached Ground Water Bulletin No. 1 shall be required prior to issuance of final Certificate of Water Right.

Construction work shall begin on or before February 1, 1969

and shall thereafter be prosecuted with reasonable diligence and completed on or before

February 1, ~~1970~~ 2-1-71

and complete application of water to proposed use shall be made on or before

February 1, ~~1971~~

Given under my hand and the seal of this office at Olympia, Washington, this 19th day of January, 1968

Fred D. Hahn Deputy Director

For Assistant Director
Division of Water Management
Department of Water Resources

Report of Examination on Ground Water

Received date June 19, 1967 Date of exam. August 22, 1967 Appli. No. 8803

Name City of Marysville Address Marysville, Washington

Type of works a well Dimensions 16" x 450'

Progress of works Not started

Quantity applied for 2000 g.p.m. 3225 acre-feet per year

Legal sub NW¼SE¼SW¼ Sec. 22 Twp. 31 N. Rge. 4 E. County Snohomish

Use Municipal supply

Irrigation-acreage: Present Planned Feasible

Municipal: Population 25,000 as of 1980

Industrial

Time pump will be operated Continuously

Other water rights appurtenant to this land See below

Protest: Seven Lakes Water Association - August 21, 1967

Proximity to existing works, springs, wells, or streams

1700 feet northeast of Lake Goodwin

Area Sub-area Zone

RECOMMENDATIONS

Approved for 2000 g.p.m. 3225 acre-feet per year, subject to existing water rights. (1 acre-foot 325,850 gallons.)

The protest to approval of this application was in the form of a letter bearing the signature of Arne Christophersen, Acting President of the Seven Lakes Water Association. Accompanying the letter was a map prepared by Lee Johnson and Associates showing the proposed pipeline system for their Water Association. Grounds for protest are that approval of this application for 2000 gallons per minute will seriously jeopardize the water supply available in the area.

The protest was received after the writer left the office on the field trip.

On October 19, 1967, Mr. William R. Smith of this office contacted a representative of Seven Lakes' Water Association and Neal F. Carefoot of Lee Johnson and Associates and discussed with them their grounds for objection to this application. The Seven Lakes Water Association is in the formative stage in that they have no system; the only work they have done is the preliminary engineering survey by their consulting firm. They have not made any formal application to this office for ground water rights prior to this filing.

(cont'd)

REPORT OF EXAMINATION ON GROUND WATER - Application No. 8803 - City of Marysville

At the well site is an existing deep well drilled in 1958 by an oil company. Logging of the well did not start until the 519-foot depth. However, it has been reported that a substantial water supply was encountered between the 350 and 450-foot depth.

There are no recorded ground water rights within one-half mile of applicant's well site.

The Washington State Water Code states that, subject to existing rights, all waters within the state belong to the public and any right thereto and any use thereof could only be acquired by appropriation for a beneficial use as provided in this law. In accordance with the doctrine of prior appropriation the Code provided that, as between appropriators, the first in time shall be the first in right.

Inasmuch as the Seven Lakes Water Association has no prior ground water rights with this office, their objections do not constitute grounds for rejection of this application.

I, therefore, recommend that this application be approved for 2000 gallons per minute, 3225 acre-feet per year, based on continuous pumping at the approved instantaneous rate.

Following is a tabulation of existing rights held by the applicants:

Record Number	Rate	Acre-feet/Year (primary)	Acre-feet/Year (supplemental)
S. W. Cert. No. 184	360 G.P.M. (0.80 c.f.s.)	576	
S. W. Cert. No. 2180	1035 G.P.M. (2.30 c.f.s.)	1656	
G. W. Cert. No. 286	300		160
G. W. Cert. No. 1152	300		320
G. W. Cert. No. 2096	500		800
G. W. Cert. No. 3100	1000		1344
G. W. Cert. No. 4155	57		91
G. W. Cert. No. 5469	1000		1156
G. W. Perm. No. 7389	1000	1600	
	5552	3832	3871

The water requirement for municipal supply in Western Washington is based on a per capita demand of 200 gallons per day. For the projected population of 25,000 persons by 1980, the water requirement would be 5600 acre-feet per year.

Inasmuch as applicants hold title to 3832 acre-feet per year as primary rights, permit will issue as follows: "Issued as a primary right for 1768 acre-feet per year and as a supplemental right for 1457 acre-feet per year, the total annual withdrawal and diversion from all rights shall not exceed 5600 acre-feet."

The legal notice of publication of this application contained an error in that the place of withdrawal was listed as the "NE¼SE¼SW¼" instead of "NW¼SE¼SW¼". Because of this error, a new notice has been prepared and forwarded to applicants. The "amended" notice corrects a publication error and does not alter the intent of this application in any way.

During the required statutory time for processing an amended publication notice, it is recommended that a temporary permit to appropriate ground water under Application No. 8803

be granted, as outlined in RCW 90.03.250. This temporary permit will authorize withdrawal by the applicant under his own responsibility until such time as the statutory requirements be completed in the processing of Ground Water Application No. 8803 for permit, filed June 19, 1967. This temporary permit shall be valid only during the pendency of this application for a permit, unless sooner revoked.

Approval of this application is further contingent to the following provisions:

The installation of an access port as described in attached Ground Water Bulletin No. 1 shall be required prior to issuance of final Certificate of Water Right. The applicant may, for his own convenience, wish to install an air-line and gage in addition to the access port.

Use of the waters to be appropriated under this application will be for a public water supply. State Board of Health rules require every owner of a public water supply to obtain written approval from the State Director of Health prior to any new construction or alterations of a public water supply. The applicant is advised to contact the Washington State Department of Health, 304 Public Health Building, Olympia, with regard to the need for compliance.

Signed at Olympia, Washington
this 6 day of December, 1967

DEAN WOOD, Water Resources Inspector
Division of Water Management

FINDINGS OF FACT AND DECISION

Upon review of the above report, I find that all facts relevant and material to the subject application have been thoroughly investigated. Furthermore, I find that water is available for appropriation for beneficial use and the appropriation thereof as recommended in the foregoing report will not impair existing rights or be detrimental to the public welfare. It is, therefore, ORDERED, that subject to existing rights, a temporary permit issue under Ground Water Application Number 8803 for the appropriation of 2000 gallons per minute, 3225 acre-feet per year of ground water continuously for municipal supply in accordance with the examiner's conclusions and recommendations.

Furthermore, unless additional data, which would modify the Report of Examination, become available during the pendency of this application, permit shall issue automatically upon payment of statutory fees after the statutory requirements concerning the amended publication have been fulfilled.

Signed at Olympia, Washington
this 8th day of December, 1967

FRED D. HAHN, Deputy Director
Division of Water Management

File Original and First Copy with the Division of Water Resources
Second Copy — Owner's Copy
Third Copy — Driller's Copy

WATER WELL REPORT

STATE OF WASHINGTON

Application No. .....

Permit No. 8276

(1) OWNER: Name City of Marysville Address City Hall, Marysville, Wash.

(2) LOCATION OF WELL: County Snohomish NW - SE ¼ SW ¼ Sec. 22 T. 31 N., R. 4 E W.M.

Bearing and distance from section or subdivision corner 1203' W. & 1138' N. from South quarter corner of sec.

(3) PROPOSED USE: Domestic ☐ Industrial ☐ Municipal ☒ Irrigation ☐ Test Well ☐ Other ☐

(4) TYPE OF WORK: Owner's number of well (if more than one) .....
New well ☒ Deepened ☐ Reconditioned ☐
Method: Dug ☐ Cable ☐ Rotary ☐ Bored ☐ Driven ☐ Jetted ☐

(5) DIMENSIONS: Diameter of well 16 inches.
Drilled 700 ft. Depth of completed well 452 ft.

(6) CONSTRUCTION DETAILS:

Casing installed: 16" Diam. from 0 ft. to 277 ft.
Threaded ☐ 12" Diam. from 0 ft. to 438 ft.
Welded ☒ " Diam. from ft. to ft.

Perforations: Yes ☐ No ☒
Type of perforator used .....
SIZE of perforations ..... in. by ..... in.
..... perforations from ..... ft. to ..... ft.
..... perforations from ..... ft. to ..... ft.
..... perforations from ..... ft. to ..... ft.

Screens: Yes ☒ No ☐ Wire wrap
Manufacturer's Name .....
Type Stainless Model No. .....
Diam. 16 Slot size 100 from 437 ft. to 452 ft.
Diam. ..... Slot size ..... from ..... ft. to ..... ft.

Gravel packed: Yes ☐ No ☒ Size of gravel: .....
Gravel placed from ..... ft. to ..... ft.

Surface seal: Yes ☒ No ☐ To what depth? 21 ft.
Material used in seal Concrete
Did any strata contain unusable water? Yes ☐ No ☒
Type of water? ..... Depth of strata .....
Method of sealing strata off .....

(7) PUMP: Manufacturer's Name .....
Type: ..... H.P. .....

(8) WATER LEVELS: Land-surface elevation above mean sea level ..... ft.
Static level 132 ft. below top of well Date .....
Artesian pressure ..... lbs. per square inch Date .....
Artesian water is controlled by ..... (Cap, valve, etc.)

(9) WELL TESTS: Drawdown is amount water level is lowered below static level
Was a pump test made? Yes ☒ No ☐ If yes, by whom? Driller
Yield: 600 gal./min. with ..... ft. drawdown after 12 hrs.
" 450 " " " 24 "
" " " " "

Recovery data (time taken as zero when pump turned off) (water level measured from well top to water level)

Time	Water Level	Time	Water Level	Time	Water Level

Date of test 3-2-68
Bailer test ..... gal./min. with ..... ft. drawdown after ..... hrs.
Artesian flow ..... g.p.m. Date .....
Temperature of water ..... Was a chemical analysis made? Yes ☐ No ☐

(10) WELL LOG:

Formation: *Describe by color, character, size of material and structure, and show thickness of aquifers and the kind and nature of the material in each stratum penetrated, with at least one entry for each change of formation.*

MATERIAL	FROM	TO
Top soil	0	12
Hardpan & boulders	12	73
Clay, sand & gravel	73	122
Hardpan	122	130
Dirty sand - some gravel	130	136
Clay, sand & gravel	136	140
Hardpan	140	154
Sand & gravel, some water	154	164
Clay, sand & gravel	164	180
Dirty sand	180	267
Coarse sand & clay	267	275
Clay, sand & gravel	275	298
Sand & clay	298	306
Sand, gravel & clay	306	318
Sticky gray clay	318	342
Sticky gray clay & gravel	342	354
Sticky blue clay	354	373
Hardpan	373	404
Gray clay	404	420
Gray clay & pea gravel	420	423
Gray clay	423	440
Sand & gravel - some water	440	454
Blue clay	454	458
Sticky blue clay	458	582
Hard shale & sticky clay	582	587
Sticky blue clay	587	693
Hard sandy blue clay	693	700

Work started ..... 19 ..... Completed 3/12/68 19

WELL DRILLER'S STATEMENT:

This well was drilled under my jurisdiction and this report is true to the best of my knowledge and belief.

NAME Richards & Well Drilling Co., Inc. (Person, firm, or corporation) (Type or print)

Address [illegible] Tacoma, Wash. 98444

[Signed] [signature] (Well Driller)

License No. 223-02-6500 Date July 20, 1970

(USE ADDITIONAL SHEETS IF NECESSARY)

ON/WRC

R. F. No. 7356—(Rev. 2-66)—2-66—5M 4816

S. F. No. 1834-A—OS

SECTION PLAT

Sec. 22 Twp. 31 N. R. 4E

GW8803

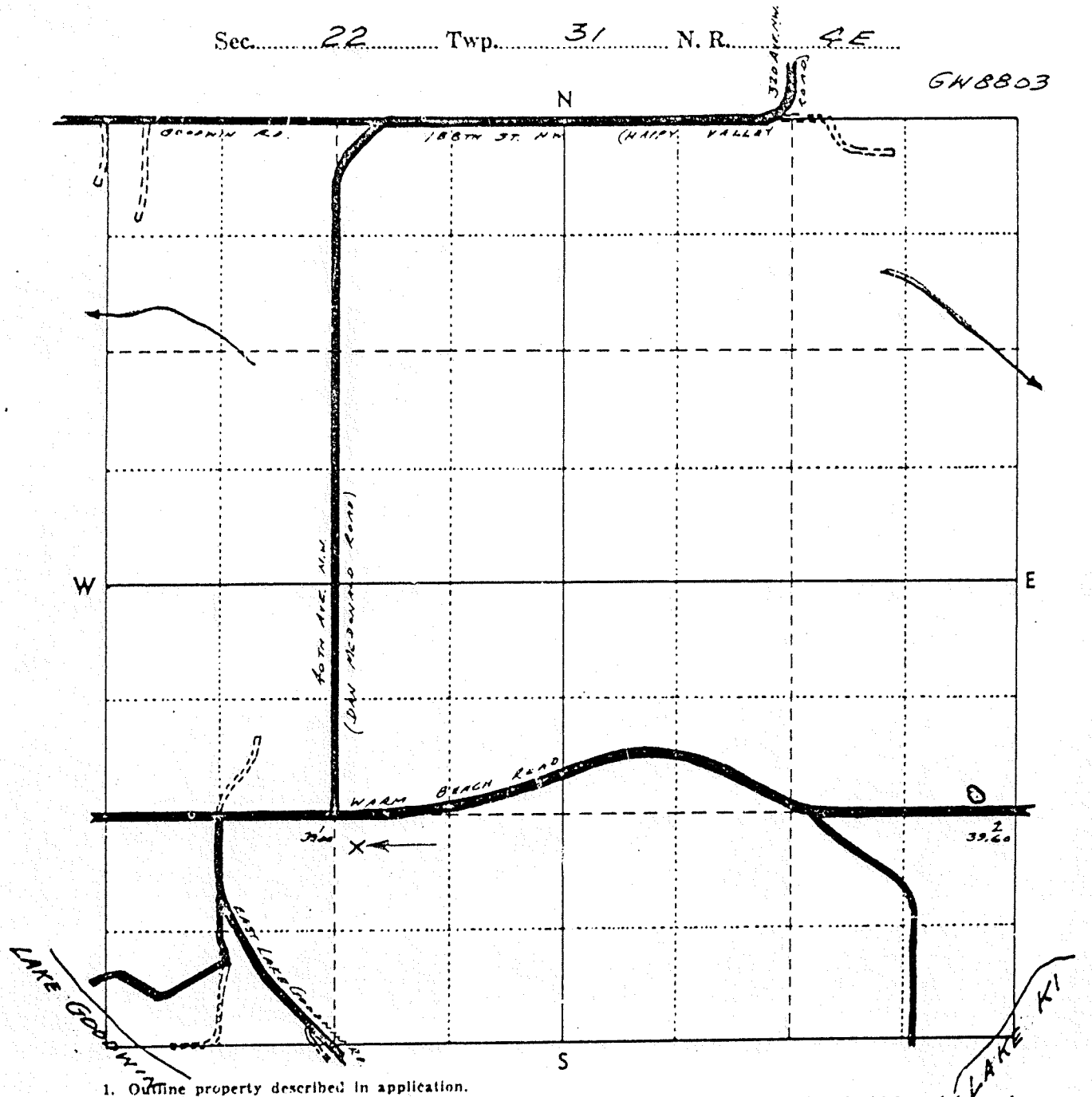

1. Outline property described in application.
2. Show by a cross (X) the location of point of diversion (surface water source) or point of withdrawal (ground water source). For ground water applications, show by a circle (O) the locations of other wells or works within a quarter of a mile.
3. Indicate traveling directions from nearest town.

OFFICE / Scale: 1 inch = 800 feet (each small square = 10 acres) STANWOOD, 7½'

STILLAGUAMISH (RAND)
JULY 14, 1970
2250 GPM

STATE OF WASHINGTON
DEPARTMENT OF ECOLOGY

CERTIFICATE OF WATER RIGHT

Cert 10741

[x] Surface Water (Issued in accordance with the provisions of Chapter 117, Laws of Washington for 1917, and amendments thereto, and the rules and regulations of the Department of Ecology.)

[ ] Ground Water (Issued in accordance with the provisions of Chapter 263, Laws of Washington for 1945, and amendments thereto, and the rules and regulations of the Department of Ecology.)

PRIORITY DATE	APPLICATION NUMBER	PERMIT NUMBER	CERTIFICATE NUMBER
July 14, 1970	11070	10741P	G1-00675C

NAME
CITY OF MARYSVILLE

ADDRESS (STREET)	(CITY)	(STATE)	(ZIP CODE)
City Hall	Marysville	Washington	98270

This is to certify that the herein named applicant has made proof to the satisfaction of the Department of Ecology of a right to the use of the public waters of the State of Washington as herein defined, and under and specifically subject to the provisions contained in the Permit issued by the Department of Ecology, and that said right to the use of said waters has been perfected in accordance with the laws of the State of Washington, and is hereby confirmed by the Department of Ecology and entered of record as shown.

PUBLIC WATER TO BE APPROPRIATED

SOURCE
Well (156" diameter, 50' deep)

TRIBUTARY OF (IF SURFACE WATERS)

MAXIMUM CUBIC FEET PER SECOND	MAXIMUM GALLONS PER MINUTE	MAXIMUM ACRE-FEET PER YEAR
	2250	3600

QUANTITY, TYPE OF USE, PERIOD OF USE
Municipal supply - continuously

LOCATION OF DIVERSION/WITHDRAWAL

APPROXIMATE LOCATION OF DIVERSION—WITHDRAWAL
730 feet south and 730 feet west of the northeast corner of Sec. 3

LOCATED WITHIN (SMALLEST LEGAL SUBDIVISION)	SECTION	TOWNSHIP N.	RANGE (E. OR W.) W.M.	W.R.I.A.	COUNTY
Govt Lot 1	3	31	5 E	5	Snohomish

RECORDED PLATTED PROPERTY

LOT	BLOCK	OF (GIVE NAME OF PLAT OR ADDITION)

LEGAL DESCRIPTION OF PROPERTY ON WHICH WATER IS TO BE USED

Area served by the city of Marysville.

PROVISIONS

The right to the use of the water aforesaid hereby confirmed is restricted to the lands or place of use herein described, except as provided in RCW 90.03.380, 90.03.390, and 90.44.020.

This certificate of water right is specifically subject to relinquishment for nonuse of water as provided in RCW 90.14.180.

Given under my hand and the seal of this office at *Washington, this* 31 *day of* July, *19* 78

Department of Ecology

ENGINEERING DATA

S. F. No. 7354—(Rev. 6-70)

STATE OF WASHINGTON
DEPARTMENT OF ECOLOGY

Permit to Appropriate Public Waters of the State of Washington

Book No. 22 of Ground Water Permits, on page 10741 under Application No. 11070

CITY OF MARYSVILLE

of Marysville, Washington

is, pursuant to the Report of Examination which has been accepted by the applicant, hereby granted a permit to appropriate the following described public ground waters of the State of Washington, subject to existing rights and to the limitations and provisions set out herein.

Priority date of this permit is July 14, 1970

Source(s) of the proposed ground water appropriation is/~~are~~ a ranney well

The quantity of water appropriated shall be limited to the amount which can be beneficially applied and not to exceed ~~7000~~ 2250 gallons per minute; ~~11,202~~ 3,600 acre-feet per year, to be used for the following purposes: municipal supply, as more definitely set out below.

Approximate location(s) of the point(s) of withdrawal is/~~are~~ 730 feet south and 730 feet west of the northeast corner Sec. 3

being within Government Lot 1 and existing bed of the Stillaguamish River

of Sec. 3, Twp. 31 N., Rge. 5 E. W.M., Snohomish County.

The use, or uses, to which water is to be applied:

~~Domestic~~/municipal supply: 7000 gallons per minute; 11,202 acre-feet per year, during entire year.

Irrigation: gallons per minute; acre-feet per year from to , each year, for the irrigation of acres.

Other use(s): gallons per minute; acre-feet per year, from to each year, for

LEGAL DESCRIPTION OF PROPERTY ON WHICH WATER IS TO BE USED

Area served By the City of Marysville

ADDITIONAL LIMITATIONS AND PROVISIONS: The installation and maintenance of an access port as described in Ground Water Bulletin No. ' shall be required prior to issuance of final Certificate of Water Right.

Issued as a primary right for 7841 acre-feet per year and as a supplemental right for 3361 acre-feet per year. The total diversion and withdrawal under all rights not to exceed 13,441 acre-feet per year.

Nothing in this permit shall be construed as excusing the permittee from compliance with any applicable federal, state, or local statutes, ordinances, or regulations including those administered by local agencies under the Shoreline Management Act of 1971.

DESCRIPTION OF PROPOSED WORKS:

The well will be dug (Dug or Drilled) and have a diameter of 156 inches, and depth of 50 feet.

Description of tunnel or infiltration trench: .....

DEVELOPMENT SCHEDULE:

Construction work shall begin on or before April 1, 1973 4-1-75 4-1-77 4-1-79

and shall thereafter be prosecuted with reasonable diligence and completed on or before

April 1, 1974 76

and complete application of water to proposed use shall be made on or before

April 1, 1975 80

This permit shall be subject to cancellation should the permittee fail to comply with the above development schedule and/or fail to give notice to the Department of Ecology on forms provided by that Department documenting such compliance.

Given under my hand and the seal of this office at Olympia, Washington, this 7th

day of April 19 72

JOHN A. BIGGS, *Director*
Department of Ecology

Report of Examination on Ground Water

Received date July 14, 1970 Date of exam October 27, 1970 Appli. No. 11070

Name City of Marysville Address City Hall, City Park, Marysville WA 98270

Type of works A ranney well Dimensions 156" x 50'

Progress of works Not started

Quantity applied for 7000 g.p.m. acre-feet per year

Lot 1 and existing bed of the Stillaguamish River

Legal sub. Govt. / Sec. 3 Twp. 31 N. Rge. 5 E. County Snohomish

Use Municipal supply

Irrigation-acreage: Present Planned - Feasible

Municipal: Population 60,000 as of 1980

Industrial

Time pump will be operated Continuously

Other water rights appurtenant to this land See below

Proximity to existing works, springs, wells, or streams Arlington Sand and Gravel Company, northwest 1000'±

Area Sub-area Zone

RECOMMENDATIONS

Approved for 7000 g.p.m. 11,202 acre-feet per year, subject to existing water rights. (1 acre-foot 325,850 gallons.)

Use of the waters to be appropriated under this application will be for a public water supply. State Board of Health rules require every owner of a public water supply to obtain written approval from the Assistant Secretary, Division of Health prior to any new construction or alterations of a public water supply. The applicant is advised to contact the Washington State Division of Health, Public Health Bldg. No. 4, Thurston Airdustrial Center, Olympia, with regard to the need for compliance.

Based on an estimated per capita demand of 200 gallons per day the annual water required for the estimated population of 60,000 is 13,441 acre-feet.

The following existing rights are held by the applicant for municipal supply.

Number	Rate	AF/YR (Primary)	AF/YR (Supplemental)
Surface Water Cert. No. 184	360 gpm (0.8 cfs)	576	
Surface Water Cert. No. 2180	1035 gpm (2.3 cfs)	1656	
Ground Water Cert. No. 286	300 gpm		160
Ground Water Cert. No. 1152	300 gpm		320
Ground Water Cert. No. 2096	500 gpm		800
Ground Water Cert. No. 3100	1000 gpm		1344
Ground Water Cert. No. 4155	57 gpm		91
Ground Water Cert. No. 5469	1000 gpm		1156
Ground Water Cert. No. 7389	1000 gpm	1600	
Ground Water Cert. No. 6980	2000 gpm	1768	1457
	7552 gpm	5600	5328

The total quantity that can be obtained by continuous pumping at 7000 gallons per minute is 11,202 acre-feet per year.

In as much as the applicant holds title to 5600 acre-feet per year as a primary right the permit will issue with the following provision: "Issued as a primary right for 7841 acre-feet per year and as a supplemental right for 3361 acre-feet per year. The total diversion and withdrawal under all rights not to exceed 13,441 acre-feet per year."

A Flood Control Zone permit from this Department will be required in addition to the appropriation permit obtained under this filing prior to beginning construction of the project.

Additionally, the permit when issued shall carry the following provision: "Nothing in this permit shall be construed as excusing the permittee from compliance with any applicable federal, state, or local statutes, ordinances, or regulations including those administered by local agencies under the Shoreline Management Act of 1971."

Signed at Olympia, Washington,
this 21 day of JAN, 1972.

BA Cameron

BRUCE A. CAMERON, Engineer
Department of Ecology

globe

MARYSVILLE, SNOHOMISH COUNTY, WASHINGTON 98270

Vol. 87, No. 3 Wednesday, January 18, 1978

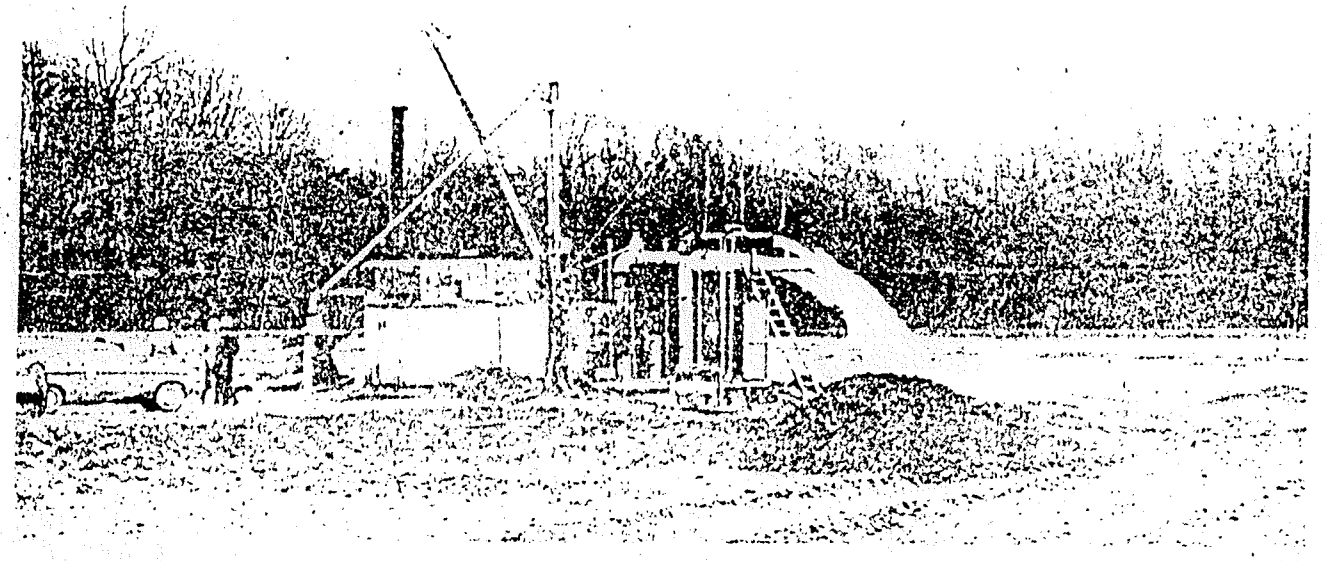

TEST PUMPING OPERATIONS ON STILLAGUAMISH RIVER

On Stillaguamish

Marysville river well tested

By Bob Buttke

A 48-hour testing period ended Tuesday morning, on the new Marysville "well" which taps water from the Stillaguamish River at the Arlington Sand and Gravel site. The testing continuously sucked water from the river bed and back to the river.

According to Fred C. Mikels president of Ranney Method, one of three firms hired to do the well work, three 100 h.p. electric pumps were in operation, pushing out 8,000 gallons per minute.

City Administrator Ken Hall said the city's water rights on the river are up to 10 million gallons per day, but that about 8 million gallons per day will be utilized for the Marysville system.

The new system is slated to be completed by April 1, with controls, surge tank and chlorinator yet to be finished.

Feasibility of such a river well has been under study and testing for some time by the city, since it was determined that the city's water supply was short of meeting its needs by 1.5 million gallons per day. When completed, the new supply will tie in with present water system near Smokey Point.

The 38 foot well draws water through filtering pipes beneath the river gravel, which is said to be the best natural filtering system there is. Concrete caissons 13 feet wide are sunk down, and when the project is completed, a sealed top will be covered with gravel making the well meet shoreline permit requirements.

The city had earlier sought $1.6 million through the drought relief program of the Federal Economic Development Administration for the additional water supply. The monies were for an $800,000 grant and a 40 year loan of $800,000 at five percent interest.

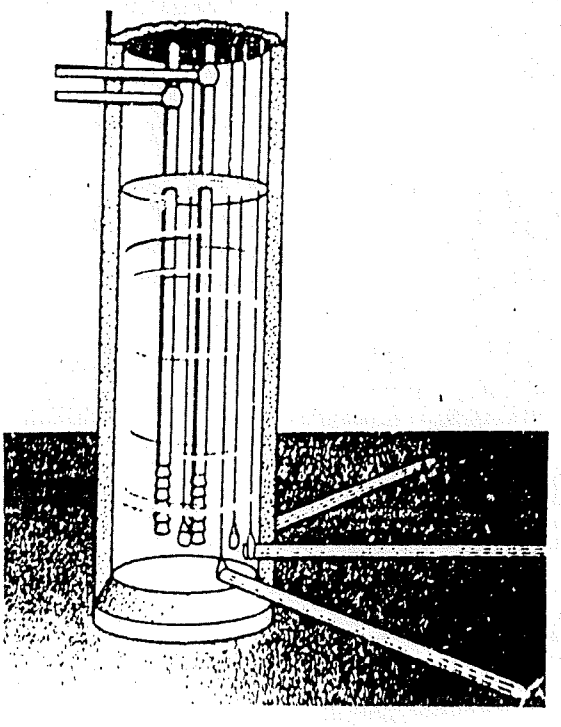

File Original and First Copy with Department of Ecology
Second Copy — Owner's Copy
Third Copy — Driller's Copy

WATER WELL REPORT

STATE OF WASHINGTON

31/05-3 A

Application No. 11070
Permit No. 10741

(1) OWNER: Name CITY OF MARYSVILLE Address CITY HALL, MARYSVILLE, WA. 98270

(2) LOCATION OF WELL: County Snohomish, Stillaquamish River NE ¼ NE ¼ Sec. 3 T 31 N., R 5E W.M.

Bearing and distance from section or subdivision corner 4479.4' north and 694.4' west of SE corner Sec. 3

(3) PROPOSED USE: Domestic ☐ Industrial ☐ Municipal ☒ Irrigation ☐ Test Well ☐ Other ☐

(4) TYPE OF WORK: Owner's number of well (if more than one) RANNEY COLLECTOR

New well ☒ Method: Dug ☒ Bored ☐
Deepened ☐ Cable ☐ Driven ☐
Reconditioned ☐ Rotary ☐ Jetted ☒

(5) DIMENSIONS: ~~Diameter of well~~ SEE NOTE inches.
Drilled ..... ft Depth of completed well ..... ft.

(6) CONSTRUCTION DETAILS: SEE NOTE

Casing installed: ..... " Diam. from ..... ft. to ..... ft.
Threaded ☐ ..... " Diam. from ..... ft. to ..... ft.
Welded ☐ ..... " Diam. from ..... ft. to ..... ft.

Perforations: Yes ☐ No ☐ SEE NOTE
Type of perforator used .....
SIZE of perforations ..... in. by ..... in.
..... perforations from ..... ft. to ..... ft.
..... perforations from ..... ft. to ..... ft.
..... perforations from ..... ft. to ..... ft.

Screens: Yes ☐ No ☐
Manufacturer's Name .....
Type ..... Model No. .....
Diam. ..... Slot size ..... from ..... ft. to ..... ft.
Diam. ..... Slot size ..... from ..... ft. to ..... ft.

Gravel packed: Yes ☐ No ☐ Size of gravel: .....
Gravel placed from ..... ft. to ..... ft.

Surface seal: Yes ☐ No ☐ To what depth? ~~MXN.N.A.~~
Material used in seal .....
Did any strata contain unusable water? Yes ☐ No ☐
Type of water? ..... Depth of strata .....
Method of sealing strata off .....

(7) PUMP: Manufacturer's Name By others
Type: ..... H.P. .....

(8) WATER LEVELS: Land-surface elevation above mean sea level 42 MSL ft.
Static level 41.4 MSL ft. below top of well Date 1-15-78
Artesian pressure ..... lbs. per square inch Date .....
Artesian water is controlled by ..... (Cap, valve, etc.)

(9) WELL TESTS: Drawdown is amount water level is lowered below static level
Was a pump test made? Yes ☒ No ☐ If yes, by whom? Driller
Yield: 7,515 gal./min. with 12.4 ft. drawdown after 48 hrs.
" " " "
" " " "

Recovery data (time taken as zero when pump turned off) (water level measured from well top to water level)

Time	Water Level	Time	Water Level	Time	Water Level

Date of test 1-15-to 1-17-78
Bailer test ..... gal./min. with ..... ft. drawdown after ..... hrs.
Artesian flow ..... g.p.m. Date .....
Temperature of water 45°F Was a chemical analysis made? Yes ☒ No ☐
(Attached)

(10) WELL LOG:

Formation: *Describe by color, character, size of material and structure, and show thickness of aquifers and the kind and nature of the material in each stratum penetrated, with at least one entry for each change of formation.*

MATERIAL	FROM	TO
Brown medium to coarse sand, medium gravel (to 4")	0	22
Grey medium to coarse sand, medium to large gravel (to 5")	22	35
Blue clay and gravel	35	

NOTE:
This well is a Ranney Collector. The reinforced concrete caisson has an inside diameter of 13 feet and an outside diameter of 16 feet. The construction elevations are as follows:

	MSL
Top of caisson	44.5
Low river level	41.0
℄ horizontal laterals	13.0
Top of plug	11.0
Cutting shoe	7.0

A total of 530 lineal feet of 10 3/4" O.D. horizontal screen laterals were installed in seven laterals ranging in length from 72 to 100 feet. Slot size is 0.375" by 2.000", (keystone). There are 108 slots per foot of pipe and 20 percent open screen area.

Work started 10-24 19 77 Completed 1-21 1978

WELL DRILLER'S STATEMENT:

This well was drilled under my jurisdiction and this report is true to the best of my knowledge and belief.

NAME Ranney Method Western Corporation (Person, firm, or corporation) (Type or print)

Address Box 6387, Kennewick, Wa., 99336

[Signed] Frederick C. Mulch (Well Driller)

License No. 0831 Date 2-18- , 1978

(USE ADDITIONAL SHEETS IF NECESSARY)

UCC-050-1-20

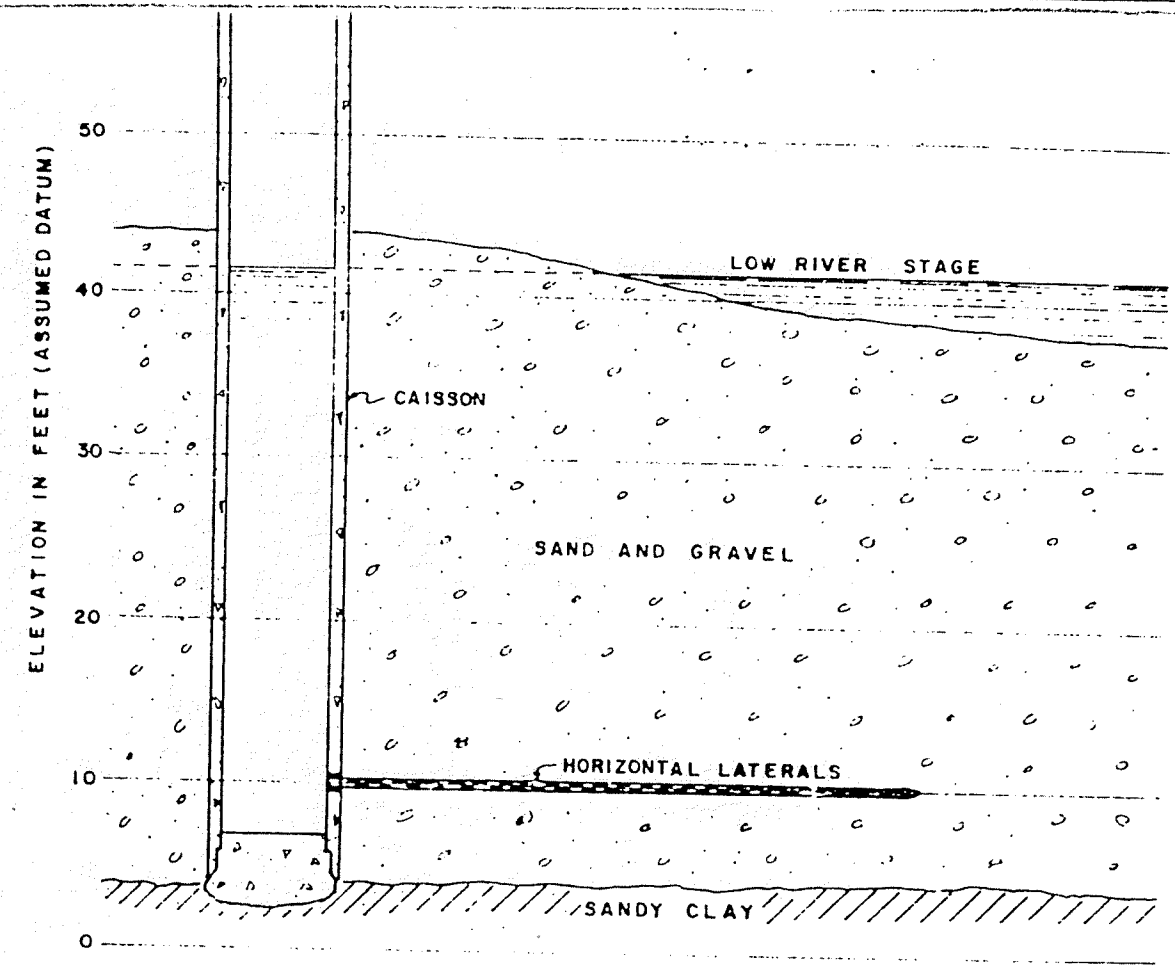

SECTION

Horiz: 1" = 20'

Vert: 1" = 10'

RANNEY METHOD
WESTERN CORPORATION
KENNEWICK, WASHINGTON

SURVEY FOR
CITY OF MARYSVILLE
WASHINGTON

PROPOSED
RANNEY COLLECTOR
INSTALLATION

11070

NOTE:

ASSUMED DATUM IS TOP OF 2-INCH PIPE AT T.H. 7 ASSUMED TO BE ELEVATION 50.00.

ASHINGTON

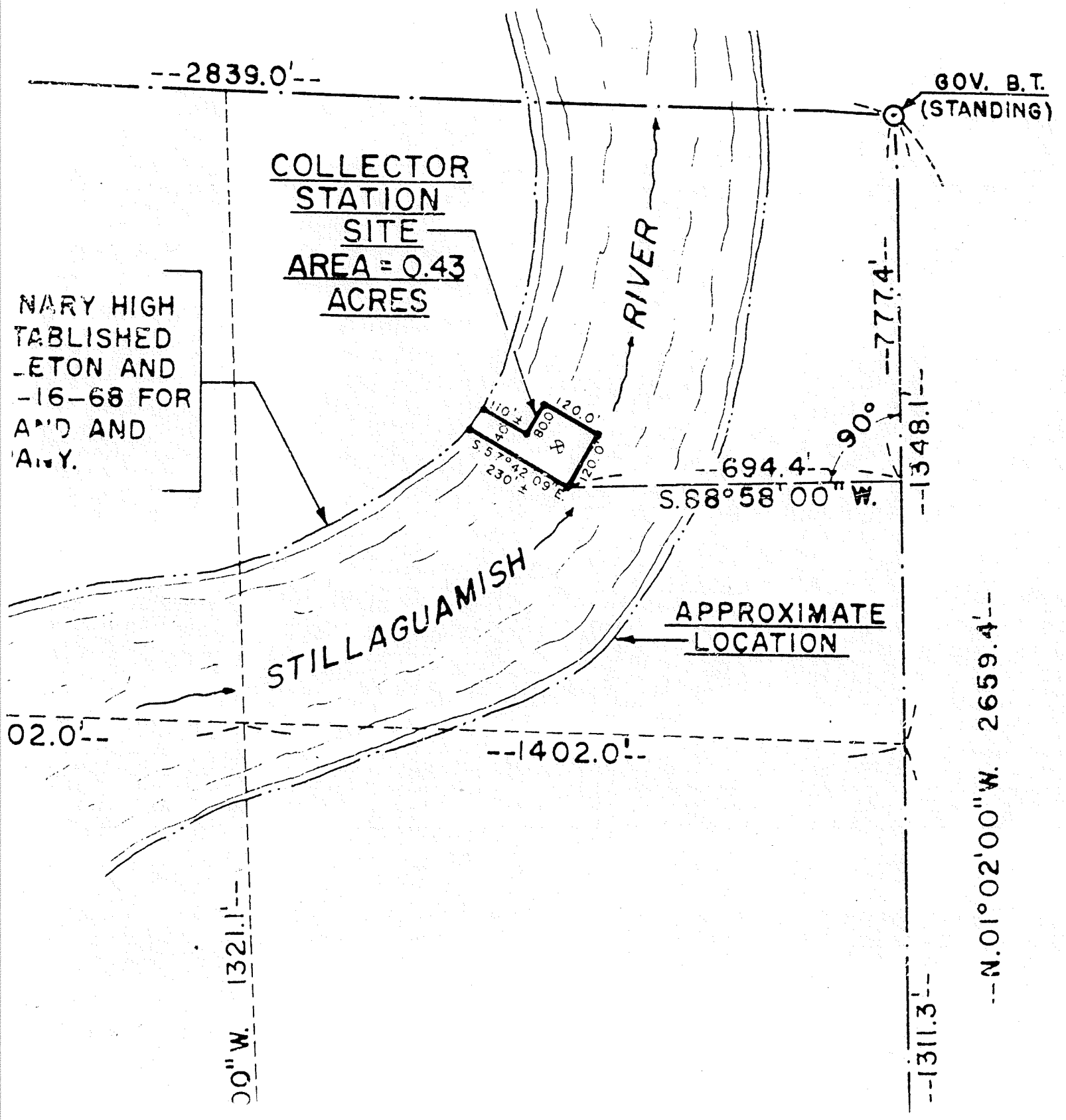
--2839.0'--
GOV. B.T.
(STANDING)
COLLECTOR
STATION
SITE
AREA = 0.43
ACRES
NARY HIGH
TABLISHED
ETON AND
-16-68 FOR
AND AND
AY.
RIVER
--7774'--
--1348.1'--
90°
120.0'
80.0
110'±
40°
S 57°42'09"E.
230'±
120.0'
--694.4'--
S.88°58'00" W.
STILLAGUAMISH
APPROXIMATE
LOCATION
02.0'--
--1402.0'--
--N.01°02'00"W. 2659.4'--
00"W. 1321.1'--
--1311.3'--

S. F. No. 1834-A—OS

SECTION PLAT

STILLY WELL SITE

Sec. 3 Twp. 31 N. R. 5 E

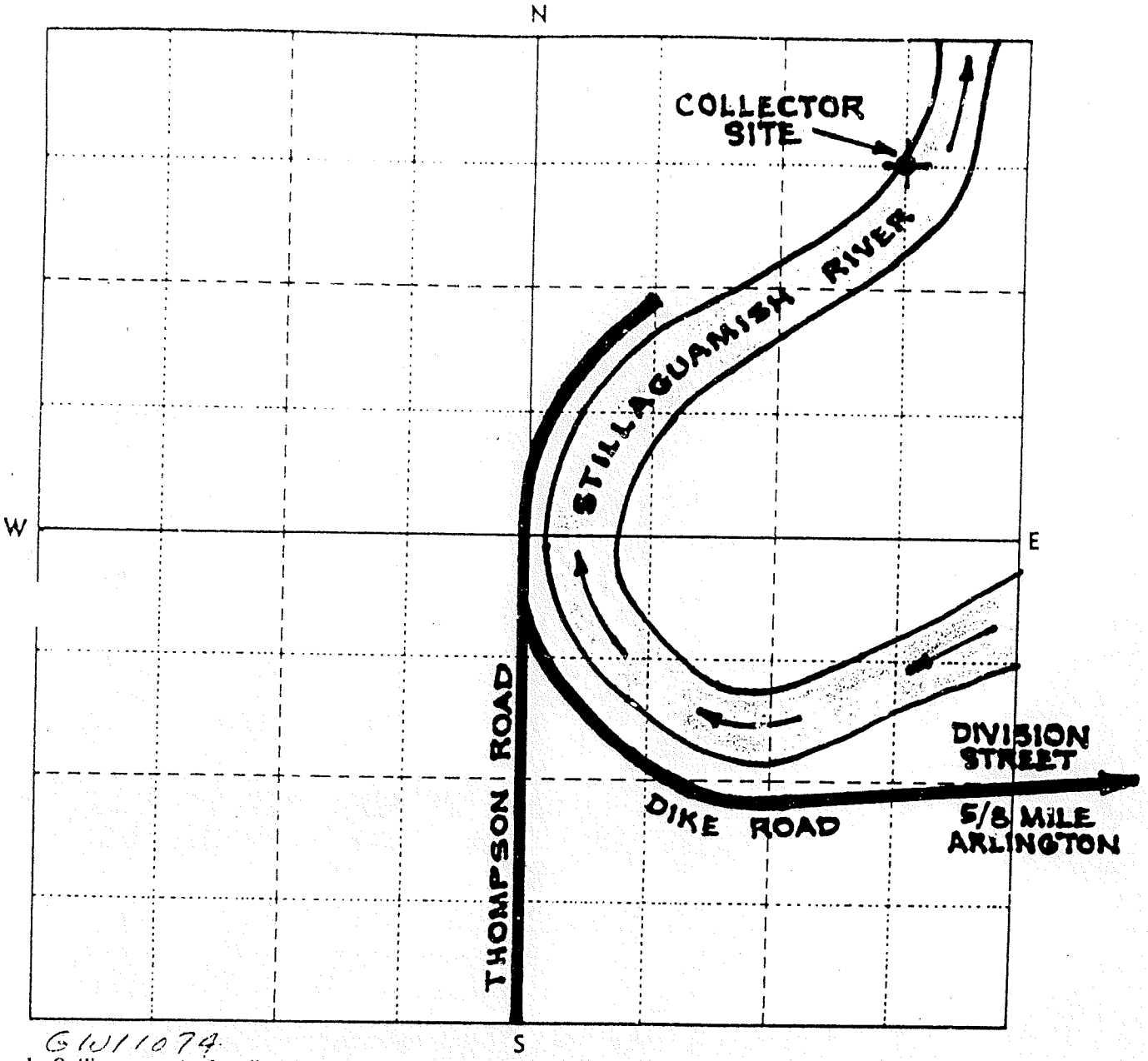

GW11074

1. Outline property described in application.
2. Show by a cross (X) the location of point of diversion (surface water source) or point of withdrawal (ground water source). For ground water applications, show by a circle (O) the locations of other wells or works within a quarter of a mile.
3. Indicate traveling directions from nearest town.

OFFICE Scale: 1 inch = 800 feet (each small square = 10 acres) 1500 - 115

Commencing at the Collector Site thence southwesterly along the left bank of the Stillaguamish River ½ mile to the intersection of the Thompson & Dike Roads thence Southeasterly & East along Dike Road (Division St. inside Arlington) 1 3/4 mile to Arlington City Center.

11070

LAKEWAY #9 - OCT 17, 1979

2250 GPM

STATE OF WASHINGTON
DEPARTMENT OF ECOLOGY

CERTIFICATE OF WATER RIGHT

Cert 23487

☐ Surface Water (Issued in accordance with the provisions of Chapter 117, Laws of Washington for 1917, and amendments thereto, and the rules and regulations of the Department of Ecology.)

☒ Ground Water (Issued in accordance with the provisions of Chapter 263, Laws of Washington for 1945, and amendments thereto, and the rules and regulations of the Department of Ecology.)

PRIORITY DATE	APPLICATION NUMBER	PERMIT NUMBER	CERTIFICATE NUMBER
October 17, 1979	G1-23487	G1-23487P	G1-23487C

NAME
CITY OF MARYSVILLE (c/o Bill Butler, Director of Public Works)

ADDRESS (STREET)	(CITY)	(STATE)	(ZIP CODE)
1409 First Street	Marysville	Washington	98270

This is to certify that the herein named applicant has made proof to the satisfaction of the Department of Ecology of a right to the use of the public waters of the State of Washington as herein defined, and under and specifically subject to the provisions contained in the Permit issued by the Department of Ecology, and that said right to the use of said waters has been perfected in accordance with the laws of the State of Washington, and is hereby confirmed by the Department of Ecology and entered of record as shown.

PUBLIC WATER TO BE APPROPRIATED

SOURCE
Well

TRIBUTARY OF (IF SURFACE WATERS)

MAXIMUM CUBIC FEET PER SECOND	MAXIMUM GALLONS PER MINUTE	MAXIMUM ACRE-FEET PER YEAR
	1,000	1,600.0

QUANTITY, TYPE OF USE, PERIOD OF USE
Municipal Supply - continuously

LOCATION OF DIVERSION/WITHDRAWAL

APPROXIMATE LOCATION OF DIVERSION—WITHDRAWAL
750 feet east and 800 feet north from the S¼ corner of Sec. 25

LOCATED WITHIN (SMALLEST LEGAL SUBDIVISION)	SECTION	TOWNSHIP N.	RANGE, (E. OR W.) W.M.	W.R.I.A.	COUNTY
SE¼SW¼	25	30	5 E	7	Snohomish

RECORDED PLATTED PROPERTY

LOT	BLOCK	OF (GIVE NAME OF PLAT OR ADDITION)

LEGAL DESCRIPTION OF PROPERTY ON WHICH WATER IS TO BE USED

Area served by City of Marysville

PROVISIONS

An approved measuring device shall be installed and maintained in accordance with RCW 90.03.360, WAC 508-64-020 through WAC 508-64-040.

Static water levels shall be measured in the subject well at least twice monthly. Meter readings and water level measurement data shall be made available to the Department of Ecology upon request.

The right to the use of the water aforesaid hereby confirmed is restricted to the lands or place of use herein described, except as provided in RCW 90.03.380, 90.03.390, and 90.44.020.

This certificate of water right is specifically subject to relinquishment for nonuse of water as provided in RCW 90.14.180.

Given under my hand and the seal of this office at Redmond *Washington, this* 15th *day of* April, *19* 83

ENGINEERING DATA

OK XX

Department of Ecology

by Robert K. McCormick

ROBERT K. McCORMICK, Regional Manager

FOR COUNTY USE ONLY

STATE OF WASHINGTON
DEPARTMENT OF ECOLOGY

PERMIT

TO APPROPRIATE PUBLIC WATERS OF THE STATE OF WASHINGTON

☐ Surface Water (Issued in accordance with the provisions of Chapter 117, Laws of Washington for 1917, and amendments thereto, and the rules and regulations of the Department of Ecology.)

☒ Ground Water (Issued in accordance with the provisions of Chapter 263, Laws of Washington for 1945, and amendments thereto, and the rules and regulations of the Department of Ecology.)

PRIORITY DATE	APPLICATION NUMBER	PERMIT NUMBER	CERTIFICATE NUMBER
October 17, 1979	G1-23487	G1-23487P	

NAME
CITY OF MARYSVILLE

ADDRESS (STREET)	(CITY)	(STATE)	(ZIP CODE)
City Hall, City Park	Marysville	Washington	98270

The applicant is, pursuant to the Report of Examination which has been accepted by the applicant, hereby granted a permit to appropriate the following described public waters of the State of Washington, subject to existing rights and to the limitations and provisions set out herein.

PUBLIC WATER TO BE APPROPRIATED

SOURCE
Well

TRIBUTARY OF (IF SURFACE WATERS)

MAXIMUM CUBIC FEET PER SECOND	MAXIMUM GALLONS PER MINUTE	MAXIMUM ACRE-FEET PER YEAR
	1,000	1,600.0

QUANTITY, TYPE OF USE, PERIOD OF USE
Municipal Supply - continuously

LOCATION OF DIVERSION/WITHDRAWAL

APPROXIMATE LOCATION OF DIVERSION—WITHDRAWAL
750 feet east and 800 feet north from the S¼ corner of Sec. 25

LOCATED WITHIN (SMALLEST LEGAL SUBDIVISION)	SECTION	TOWNSHIP N.	RANGE, (E. OR W.) W.M.	W.R.I.A.	COUNTY
SE¼SW¼	25	30	5 E	7	Snohomish

RECORDED PLATTED PROPERTY

LOT	BLOCK	OF (GIVE NAME OF PLAT OR ADDITION)

LEGAL DESCRIPTION OF PROPERTY ON WHICH WATER IS TO BE USED

Area served by City of Marysville

DESCRIPTION OF PROPOSED WORKS

DEVELOPMENT SCHEDULE

BEGIN PROJECT BY THIS DATE:	COMPLETE PROJECT BY THIS DATE:	WATER PUT TO FULL USE BY THIS DATE:
Started	December 31, 1982	December 31, 1982

PROVISIONS

An approved measuring device shall be installed and maintained in accordance with RCW 90.03.360, WAC 508-64-020 through WAC 508-64-040.

Static water levels shall be measured in the subject well at least twice monthly. Meter readings and water level measurement data shall be made available to the Department of Ecology upon request.

This permit shall be subject to cancellation should the permittee fail to comply with the above development schedule and/or fail to give notice to the Department of Ecology on forms provided by that Department documenting such compliance.

Given under my hand and the seal of this office at Redmond *Washington, this* 31st *day of* December, *19* 80

Department of Ecology

ENGINEERING DATA

OK

by ROBERT K. McCORMICK, Regional Manager

STATE OF WASHINGTON
DEPARTMENT OF ECOLOGY

REPORT OF EXAMINATION
TO APPROPRIATE PUBLIC WATERS OF THE STATE OF WASHINGTON

☐ Surface Water (Issued in accordance with the provisions of Chapter 117, Laws of Washington for 1917, and amendments thereto, and the rules and regulations of the Department of Ecology.)

☒ Ground Water (Issued in accordance with the provisions of Chapter 263, Laws of Washington for 1945, and amendments thereto, and the rules and regulations of the Department of Ecology.)

PRIORITY DATE	APPLICATION NUMBER	PERMIT NUMBER	CERTIFICATE NUMBER
October 17, 1979	G1-23487		

NAME
CITY OF MARYSVILLE

ADDRESS (STREET)	(CITY)	(STATE)	(ZIP CODE)
City Hall, City Park	Marysville	Washington	98270

Field Examination: August 21, 1980

PUBLIC WATERS TO BE APPROPRIATED

SOURCE
Well (16" x 272')

TRIBUTARY OF (IF SURFACE WATERS)

MAXIMUM CUBIC FEET PER SECOND	MAXIMUM GALLONS PER MINUTE	MAXIMUM ACRE-FEET PER YEAR
	1,000	1,600.0

QUANTITY, TYPE OF USE, PERIOD OF USE
Municipal Supply - continuously

LOCATION OF DIVERSION/WITHDRAWAL

APPROXIMATE LOCATION OF DIVERSION—WITHDRAWAL
750 feet east and 800 feet north from the S¼ corner of Sec. 25

LOCATED WITHIN (SMALLEST LEGAL SUBDIVISION)	SECTION	TOWNSHIP N.	RANGE, (E. OR W.) W.M.	W.R.I.A.	COUNTY
SE¼SW¼	25	30	5 E	7	Snohomish

RECORDED PLATTED PROPERTY

LOT	BLOCK	OF (GIVE NAME OF PLAT OR ADDITION)

LEGAL DESCRIPTION OF PROPERTY ON WHICH WATER IS TO BE USED

Area served by City of Marysville

DESCRIPTION OF PROPOSED WORKS

1 well 16" x 272'
Proposed 100 HP pump
2-3 million gallon reservoir
SWL - 150' below top of well (taken on 8-21-80)

DEVELOPMENT SCHEDULE

BEGIN PROJECT BY THIS DATE:	COMPLETE PROJECT BY THIS DATE:	WATER PUT TO FULL USE BY THIS DATE:
Started	1 yr from permit issuance	2 yrs from permit issuance

PROVISIONS

Background:

On October 17, 1979 the City of Marysville submitted an application to this offi requesting 1,000 gallon per minute from a well for municipal supply.

The public notice appeared in the Everett Herald on November 21 and 28, 1979. No protests were filed on this appropriation request.

Investigation:

Research of office records plus a field exam conducted on August 21, 1980 provide the following information.

The City of Marysville has existing surface and and ground water rights as outlined below.

Record No.	Instant. Quantity	AF/Yr	AF/Yr Supp. - Primary
S.W.Cert. 184	.8 cfs	576	
S.W.Cert. 2180	2.3 cfs	1656	
G.W.Cert. 286	300 gpm	160	
G.W.Cert. 1152	300 gpm	320	Total withdrawal from all sources shall not exceed 1120 af/yr for pop. of 5,000
G.W.Cert. 2096	500 gpm	800	Total withdrawal from all sources shall not exceed 1120 af/yr for pop. of 5,000
G.W.Cert. 3100	1000 gpm	1344	Total withdrawal from all sources shall not exceed 1344 af/yr (based on 200g/d/person for 6,000 pop.)
G.W.Cert. 4155	57 gpm	91	Total yearly withdrawal from all authorized sources shall not exceed 1120 af/yr (based on pop. of 5,000)
G.W.Cert. 5469	1000 gpm	1176	Total withdrawal from this right shall not exceed 1176 af/yr less any amt. diverted to this use under existing rights (based on 7,000 pop. and 150 g/d/person.
G.W.Cert. 6980	550gpm	880	Total annual withdrawal and diversion from all rights shall not exceed 5600 af/yr. (Based on 200 g/d/person for pop. of 25,000)
G1-00675C	2250 gpm	3600	The total diversion and withdrawal under all rights shall not exceed 13,441 af/yr. (Max. based on 200 g/d/person for 60,000 pop.)
R1-20307C		22	No secondary permit required as this reservoir is filled by Edwards Springs (S.W.Cert 2180 - 2.3 cfs.)
	TOTAL	10,625	

A number of the existing rights have been stipulated as being supplemental, however due to miscalculations the supplemental portions are in error by allowing the city to divert or withdraw the full volume as specified on each certification the total amounts to 10,625 acre-feet.

Records for the State Department of Health for 1979 indicate that daily per capita consumption for the city amounts to an average of 200 gallons. Based on this consumption figure and a system designed to service up to 60,000 people, the city will require a total of 13,440 acre-feet of water per year.

The well for this appropriation request was drilled in November 1979 by Burt Well Drilling Inc. The well is located on a 5 acre parcel of land owned by the city being within the SE¼SW¼ of Sec. 25, T. 30N, R. 5E.

The geotechnical consulting firm of Converse Ward Davis Dixon conducted a 24-hour pump test for the new city well. Test results confirmed that the well could be developed for an ultimate sustained capacity of 1800 gpm.

According to the office records there are several wells within a quarter mile from the applicant's well but any significant impact is unlikely between the applicant's well and nearby wells.

Conclusions:

Since the total corrected withdrawal and diversion rights held by the city (10625 af/yr) are under the projected yearly demands for a population figure of 60,000 (13,440 af/yr), this current request will be an additional withdrawal right.

Pumping at a continuous rate of 1,000 gpm, this appropriation request would deliver 1,600 acre-feet per year.

In accordance with Section 90.03 and 90.44 RCW, I find that there is water available for appropriation from the source in question and that the appropriation as recommended above will not impair existing rights or be detrimental to the public welfare. Therefore, permit should issue subject to existing rights and indicated provisions.

Recommendation:

This permit shall issue for 1,000 gallons per minute, 1,600 acre-feet per year from a well for minicipal supply.

An approved measuring device shall be installed and maintained in accordance with RCW 90.03.360, WAC 508-64-020 through WAC 508-64-040 (Installation, operation and maintenance requirements attached hereto).

REPORT BY: Janet Jug DATE: Oct 17, 1988

The Original and First Copy with Department of Ecology
Second Copy — Owner's Copy
Third Copy — Driller's Copy

WATER WELL REPORT

STATE OF WASHINGTON

Application No. .....

Permit No. .....

(1) OWNER: Name [illegible] Address [illegible], WA 98270

(2) LOCATION OF WELL: County Snohomish SW ¼ — SE ¼ SW ¼ Sec. 25 T. 30 N., R. 5E W.M.
Bearing and distance from section or subdivision corner

(3) PROPOSED USE: Domestic ☐ Industrial ☐ Municipal ☒ Irrigation ☐ Test Well ☐ Other ☐

(4) TYPE OF WORK: Owner's number of well (if more than one) .....
New well ☒ Method: Dug ☐ Bored ☐
Deepened ☐ Cable ☒ Driven ☐
Reconditioned ☐ Rotary ☐ Jetted ☐

(5) DIMENSIONS: Diameter of well 16 inches.
Drilled 272 ft. Depth of completed well 272 ft.

(6) CONSTRUCTION DETAILS:

Casing installed: 16" Diam. from 0 ft. to 272 ft.
Threaded ☐ ..." Diam. from ... ft. to ... ft.
Welded ☒ ..." Diam. from ... ft. to ... ft.

Perforations: Yes ☐ No ☒
Type of perforator used .....
SIZE of perforations ... in. by ... in.
... perforations from ... ft. to ... ft.
... perforations from ... ft. to ... ft.
... perforations from ... ft. to ... ft.

Screens: Yes ☒ No ☐ (See Screen assembly under well log)
Manufacturer's Name Johnson
Type Stainless Steel Model No. .....
Diam. 16" Slot size ... from 226 ft. to 269 ft.
Diam. ... Slot size ... from ... ft. to ... ft.

Gravel packed: Yes ☐ No ☒ Size of gravel: .....
Gravel placed from ... ft. to ... ft.

Surface seal: Yes ☒ No ☐ To what depth? 20 ft.
Material used in seal Cement
Did any strata contain unusable water? Yes ☐ No ☒
Type of water? ... Depth of strata ...
Method of sealing strata off ...

(7) PUMP: Manufacturer's Name ...
Type: ... H.P. ...

(8) WATER LEVELS: Land-surface elevation above mean sea level 440± ft.
Static level 150.8 ft. below top of well Date 11/15/79
Artesian pressure ... lbs. per square inch Date ...
Artesian water is controlled by ... (Cap, valve, etc.)

(9) WELL TESTS: Drawdown is amount water level is lowered below static level
Was a pump test made? Yes ☒ No ☐ If yes, by whom? CWDD
Yield: 1042* gal./min. with 23.5 ft. drawdown after 24.0 hrs.
" *Equivalent pumping rate of step- "
" drawdown test. " "

Recovery data (time taken as zero when pump turned off) (water level measured from well top to water level)

Time	Water Level	Time	Water Level	Time	Water Level
5 (min)	155.7	25	154.35	85	153.1
10	155.1	45	153.8	105	152.9
15	155.05	65	153.35	125	152.65

Date of test 11/15/79
Bailer test ... gal./min. with ... ft. drawdown after ... hrs.
Artesian flow ... g.p.m. Date ...
Temperature of water ... Was a chemical analysis made? Yes ☒ No ☐

(10) WELL LOG:

Formation: Describe by color, character, size of material and structure, and show thickness of aquifers and the kind and nature of the material in each stratum penetrated, with at least one entry for each change of formation.

MATERIAL	FROM	TO
Hardpan	0	10
Till	10	20
Till Hard	20	30
Till	30	40
Clay	40	47
Till	47	88
Gray Till	88	108
Hardpan	108	130
Gravel, Clay Binder	130	160
Sand, Gravel, some dirty	160	170
Clay, Gravel	170	180
Sand & Gravel	180	185
Blue Clay	185	190
Gravel, Clay	190	195
Sand & Gravel	195	200
Clay, Gravel	200	202
Blue Clay	202	218
Cemented Gravel	218	225
Sand, Gravel, Cobble Stones with Boulders & Water	225	272
SCREEN ASSEMBLY		
#150 Slot Screen	226	246
#25 Slot Screen	246	250
#50 Slot Screen	250	252
#100 Slot Screen	252	254
#150 Slot Screen	254	257
#35 Slot Screen	257	262
#70 Slot Screen	262	264
#150 Slot Screen	264	269

Work started 10-2, 19 79 Completed 11-16, 19 79

WELL DRILLER'S STATEMENT:

This well was drilled under my jurisdiction and this report is true to the best of my knowledge and belief.

NAME Burt Well Drilling, Inc. (Person, firm, or corporation) (Type or print)

Address Rt. 1, Box 283 Poulsbo, WA 98370

[Signed] George W. Burt (Well Driller)

License No. 0048 Date 12-4, 1979

RECEIVED FEB 4 1980 DEPARTMENT OF ECOLOGY NORTHWEST REGION

(USE ADDITIONAL SHEETS IF NECESSARY)

ECY 050-1-20

SECTION MAP

Sec. 25 Twp. 30 N. R. 5 E

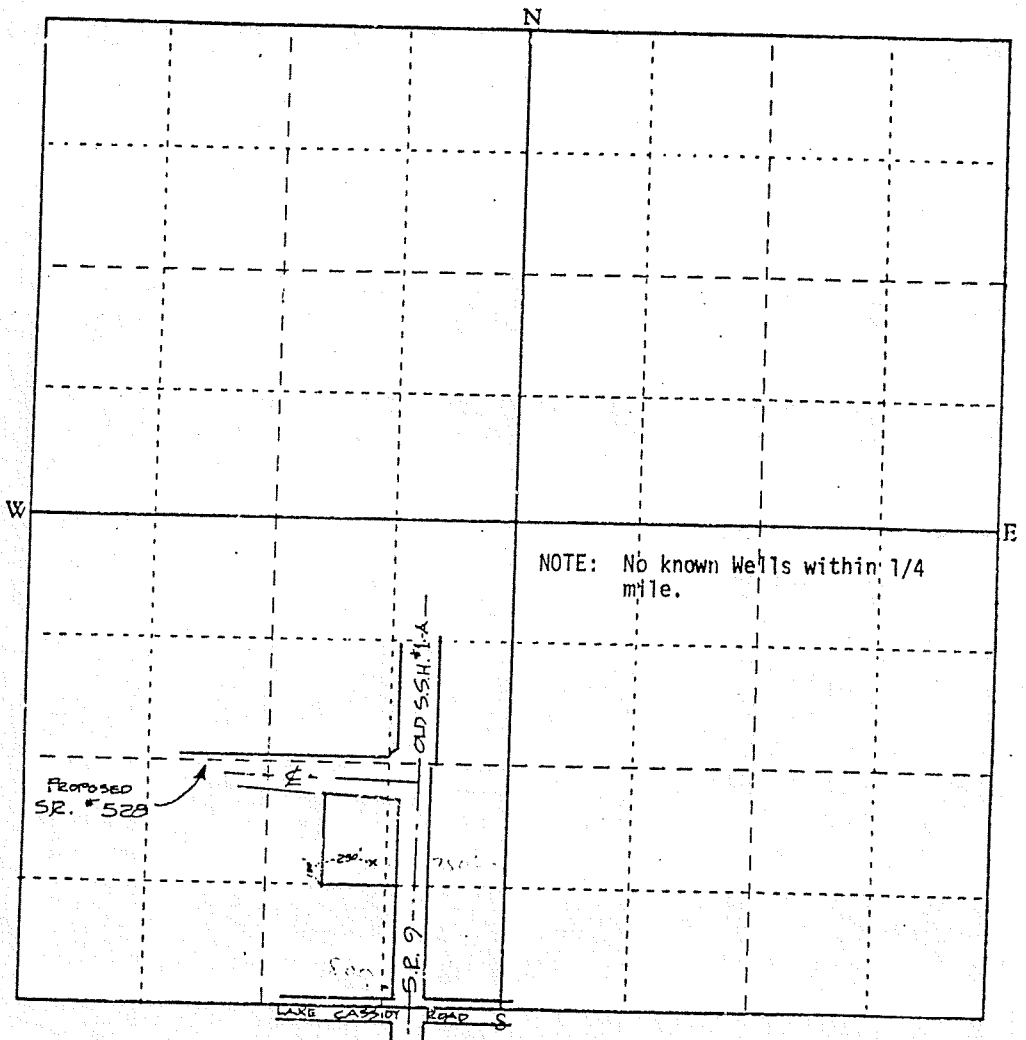

G123487

Scale: 1 inch = 800 feet (each small square = 10 acres)

Show by a cross (X) the location of point of diversion (surface water source) or point of withdrawal (ground water source). For ground water applications, show by a circle (O) the locations of other wells or works within a quarter of a mile.

Indicate traveling directions from nearest town in space below.

Site is located 3 miles East of Marysville; 1000' North of Lake Cassidy Road, adjacent to West Boundary of S.R. #9.

LEGAL DESCRIPTION:

The East 400 feet of that portion of the North half of the Southeast quarter of the Southwest quarter of Section 25, Township 30 North, Range 5 East, W.M., lying West of Secondary State Highway 1-A; situate in the County of Snohomish, State of Washington.

EXCEPT: That portion lying Northerly of a line described as follows:

SEE ATTACHED

Detach here

Fold along scale

FEET 0 400 800 1,200 1,600 2,000 2,400 2,800 3,200 3,600 4,000 4,400 4,800 5,200

RECEIVED
OCT 17 1979
DEPT. OF ECOLOGY

STATE OF WASHINGTON
DEPARTMENT OF ECOLOGY

EDWARD SPRINGS
WELL #3
400 GPM

PERMIT

TO APPROPRIATE PUBLIC WATERS OF THE STATE OF WASHINGTON

251828

☐ Surface Water (Issued in accordance with the provisions of Chapter 117, Laws of Washington for 1917, and amendments thereto, and the rules and regulations of the Department of Ecology.)

☒ Ground Water (Issued in accordance with the provisions of Chapter 263, Laws of Washington for 1945, and amendments thereto, and the rules and regulations of the Department of Ecology.)

PRIORITY DATE	APPLICATION NUMBER	PERMIT NUMBER	CERTIFICATE NUMBER
February 16, 1988	G1-25182	G1-25182 P	

NAME
City of Marysville

ADDRESS (STREET)	(CITY)	(STATE)	(ZIP CODE)
514 Delta Avenue	Marysville	Washington	98270

The applicant is, pursuant to the Report of Examination which has been accepted by the applicant, hereby granted a permit to appropriate the following described public waters of the State of Washington, subject to existing rights and to the limitations and provisions set out herein.

PUBLIC WATERS TO BE APPROPRIATED

SOURCE
Well

TRIBUTARY OF (IF SURFACE WATERS)
N/A

MAXIMUM CUBIC FEET PER SECOND	MAXIMUM GALLONS PER MINUTE	MAXIMUM ACRE FEET PER YEAR
	400	451*

QUANTITY, TYPE OF USE, PERIOD OF USE
Municipal supply/continuously

*Annual quantity is supplemental to existing rights held by City of Marysville. Total annual consumption from all sources shall not exceed 8,472 acre-feet.

LOCATION OF DIVERSION/WITHDRAWAL

APPROXIMATE LOCATION OF DIVERSION--WITHDRAWAL
1000 feet north and 800 feet east of SW corner of Section 24.

LOCATED WITHIN (SMALLEST LEGAL SUBDIVISION)	SECTION	TOWNSHIP N.	RANGE, (E. OR W.) W.M.	W.R.I.A.	COUNTY
SW1/4 SW1/4	24	31N	4E	5	Snohomish

RECORDED PLATTED PROPERTY

LOT	BLOCK	OF (GIVE NAME OF PLAT OR ADDITION)

LEGAL DESCRIPTION OF PROPERTY ON WHICH WATER IS TO BE USED

Area served by the City of Marysville in accordance with its 1996 approved water system plan.

DESCRIPTION OF PROPOSED WORKS

Well, 12" x 200'
Connection to distribution system

DEVELOPMENT SCHEDULE

BEGIN PROJECT BY THIS DATE:	COMPLETE PROJECT BY THIS DATE:	WATER PUT TO FULL USE BY THIS DATE:
Started	Complete	April 15, 2019

PROVISIONS

This permit is issued pursuant to the stipulation and agreed order of dismissal filed in Pollution Control Hearings Board (PCHB) Case No. 96-153 incorporated herein.

An approved metering device shall be installed and maintained in accordance with RCW 90.03.360, WAC 508-64-020 through 040 (installation, operation, and maintenance requirements). Meter readings shall be recorded at least monthly and this data shall be maintained and be made available to the Department of Ecology upon request.

In order to monitor the resource, static water level (SWL) shall be measured at least once each month. Measurements shall be taken after the pump has been shut off and the water level in the well has been stabilized. The data shall be maintained and made available to Ecology upon request. However, Ecology's Water Resources Section (NWRO) shall be notified if the SWL is determined to be below the level normally recorded at that time of year. See enclosed form.

Issuance of this water right is subject to the implementation of the minimum requirements established in the Conservation Planning Requirements, Guideline and Requirements for Public Water Systems Regarding Water Use Reporting, Demand Forecasting Methodology, and Conservation Programs, July 1994, and as revised.

Under RCW 90.03.005 and 90.54.020(6), conservation and improved water use efficiency must be emphasized in the management of the states water resources, and must be considered as a potential new source of water. Accordingly, as part of the terms of this water right, the applicant shall prepare and implement a water conservation plan approved by Department of Health. The standards for such a plan may be obtained from either the Department of Health or the Department of Ecology.

This permit shall be subject to cancellation should the permittee fail to comply with the above development schedule and/or fail to give notice to the Department of Ecology on forms provided by that Department documenting such compliance.

Given under my hand and the seal of this office at Bellevue, Washington, this 15th day of April, 1999.

STATE OF WASHINGTON

Engineering Data
OK

Department of Ecology

By

Daniel L. Swenson, Section Supervisor, Water Resources

STATE OF WASHINGTON
DEPARTMENT OF ECOLOGY

PERMIT

TO APPROPRIATE PUBLIC WATERS OF THE STATE OF WASHINGTON

☐ Surface Water (Issued in accordance with the provisions of Chapter 117, Laws of Washington for 1917, and amendments thereto, and the rules and regulations of the Department of Ecology.)

☒ Ground Water (Issued in accordance with the provisions of Chapter 263, Laws of Washington for 1945, and amendments thereto, and the rules and regulations of the Department of Ecology.)

PRIORITY DATE	APPLICATION NUMBER	PERMIT NUMBER	CERTIFICATE NUMBER
February 16, 1988	G1-25182	G1-25182 P	

NAME
City of Marysville

ADDRESS (STREET)	(CITY)	(STATE)	(ZIP CODE)
514 Delta Avenue	Marysville	Washington	98270

The applicant is, pursuant to the Report of Examination which has been accepted by the applicant, hereby granted a permit to appropriate the following described public waters of the State of Washington, subject to existing rights and to the limitations and provisions set out herein.

PUBLIC WATERS TO BE APPROPRIATED

SOURCE
Well

TRIBUTARY OF (IF SURFACE WATERS)
N/A

MAXIMUM CUBIC FEET PER SECOND	MAXIMUM GALLONS PER MINUTE	MAXIMUM ACRE FEET PER YEAR
	400	451*

QUANTITY, TYPE OF USE, PERIOD OF USE
Municipal supply/continuously

*Annual quantity is supplemental to existing rights held by City of Marysville. Total annual consumption from all sources shall not exceed 8,472 acre-feet.

LOCATION OF DIVERSION/WITHDRAWAL

APPROXIMATE LOCATION OF DIVERSION--WITHDRAWAL
1000 feet north and 800 feet east of SW corner of Section 24.

LOCATED WITHIN (SMALLEST LEGAL SUBDIVISION)	SECTION	TOWNSHIP N.	RANGE, (E. OR W.) W.M.	W.R.I.A.	COUNTY
SW1/4 SW1/4	24	31N	4E	5	Snohomish

RECORDED PLATTED PROPERTY

LOT	BLOCK	OF (GIVE NAME OF PLAT OR ADDITION)

LEGAL DESCRIPTION OF PROPERTY ON WHICH WATER IS TO BE USED

Area served by the City of Marysville in accordance with its 1996 approved water system plan.

DESCRIPTION OF PROPOSED WORKS

Well, 12" x 200'
Connection to distribution system

DEVELOPMENT SCHEDULE

BEGIN PROJECT BY THIS DATE:	COMPLETE PROJECT BY THIS DATE:	WATER PUT TO FULL USE BY THIS DATE:
Started	Complete	April 15, 2019

PROVISIONS

This permit is issued pursuant to the stipulation and agreed order of dismissal filed in Pollution Control Hearings Board (PCHB) Case No. 96-153 incorporated herein.

An approved metering device shall be installed and maintained in accordance with RCW 90.03.360, WAC 508-64-020 through 040 (installation, operation, and maintenance requirements). Meter readings shall be recorded at least monthly and this data shall be maintained and be made available to the Department of Ecology upon request.

In order to monitor the resource, static water level (SWL) shall be measured at least once each month. Measurements shall be taken after the pump has been shut off and the water level in the well has been stabilized. The data shall be maintained and made available to Ecology upon request. However, Ecology's Water Resources Section (NWRO) shall be notified if the SWL is determined to be below the level normally recorded at that time of year. See enclosed form.

Issuance of this water right is subject to the implementation of the minimum requirements established in the Conservation Planning Requirements, Guideline and Requirements for Public Water Systems Regarding Water Use Reporting, Demand Forecasting Methodology, and Conservation Programs, July 1994, and as revised.

Under RCW 90.03.005 and 90.54.020(6), conservation and improved water use efficiency must be emphasized in the management of the states water resources, and must be considered as a potential new source of water. Accordingly, as part of the terms of this water right, the applicant shall prepare and implement a water conservation plan approved by Department of Health. The standards for such a plan may be obtained from either the Department of Health or the Department of Ecology.

This permit shall be subject to cancellation should the permittee fail to comply with the above development schedule and/or fail to give notice to the Department of Ecology on forms provided by that Department documenting such compliance.

Given under my hand and the seal of this office at Bellevue, Washington, this 15th day of April, 1999.

STATE OF WASHINGTON

Engineering Data
OK_____

Department of Ecology

By _____
Daniel L. Swenson, Section Supervisor, Water Resources

RECEIVED
MAY 13 1997
ATTORNEY GENERAL'S OFFICE
Ecology Div. - Lacey

RECEIVED
MAY 07 1997
ENVIRONMENTAL
HEARINGS BOARD

BEFORE THE POLLUTION CONTROL HEARINGS BOARD

TULALIP TRIBES OF WASHINGTON, Appellant, vs. STATE OF WASHINGTON, DEPARTMENT OF ECOLOGY, and CITY OF MARYSVILLE, Respondents.	PCHB NO. 96-153 STIPULATION AND AGREED ORDER OF DISMISSAL

The Appellant, Tulalip Tribes of Washington ("Tribes"), through its attorney Mason D. Morisset, and the Respondents, State of Washington, Department of Ecology ("DOE") and the City of Marysville ("Marysville"), through their respective attorneys, Jo Messex Casey and Grant K. Weed, hereby enter into this Stipulation and Agreed Order of Dismissal as follows:

STIPULATION

The parties desire to resolve the dispute herein and not incur any further expense or time in litigation of this matter and, therefore, without admitting fault, liability, or any improper action or claim, stipulate and agree as follows:

1. **BACKGROUND.**

a. On February 16, 1988 the City of Marysville filed Ground Water Application G1-25182 for a water right for municipal domestic supply. The water right requested is for the development of Edwards Spring Well No. 3.

LAW OFFICES OF
KEITHLY, WEED AND GRAAFSTRA, INC., P.S.
21 AVENUE A
SNOHOMISH, WASHINGTON 98290-2962
(360) 568-3119; FAX (360) 568-4437

b. On January 30, 1996 the Department of Ecology issued a decision approving Marysville's request for a 400 gpm new instantaneous ground water right, with no increase in annual quantity, and no finding of impairment to existing rights or instream flows.

c. On March 5, 1996 the Tulalip Tribes of Washington appealed the decision of the Department of Ecology to the Pollution Control Hearings Board. The Tulalip Tribes amended their appeal on March 26, 1996. In their appeal, the Tribes allege that Edwards Spring Well No. 3 is in hydraulic continuity with the Stilliguamish River, and its tributary streams, and that its use will impair streamflows and habitat required for fishery production.

d. Based on subsequent investigation, Ecology asserts that hydraulic continuity exists between Edwards Spring Well No. 3 and Cougar Creek and that pumping would likely reduce instream flows in Cougar Creek and related waters downstream.

e. Marysville disputes Ecology's assertions that pumping of Edward Spring Well No. 3 would likely reduce instream flows in Cougar and related waters downstream. Marysville also disputes the Tribes' claim of impairment to instream flows or fishery habitat, but in the interest of reaching a settlement between the parties on the issuance of a permit for GW 1-25182, has developed a Streamflow Augmentation Project which the parties agree will benefit instream flow and fishery conditions in Cougar

LAW OFFICES OF
KEITHLY, WEED AND GRAAFSTRA, INC., P.S.
21 AVENUE A
SNOHOMISH, WASHINGTON 98290-2962
(360) 568-3119; FAX (360) 568-4437

Creek, Fish Creek, Portage Creek, and the Stilliguamish River. The Streamflow Augmentation Project will accomplish the following:

i. Installation of a stream discharge pipe facility from the Edwards Springs collector system to Cougar Creek.

ii. Release of water at a controlled rate maintained within a range of temperature and water quality standards compatible with those existing at the Edwards Springs Collector System and/or necessary to support salmonid populations in Cougar Creek. In the event that the temperature and/or quality of water released does not meet standards required to support salmonid survival, Marysville shall discontinue release of water until "normal" quality and temperature conditions are restored. For purposes of this Stipulation and Agreed Order of Dismissal, "normal" shall mean a temperature not exceeding 14°C and dissolved oxygen of not less than 8 mg/L.

iii. Releases of water over a period of time from June through October at rates described in Section 2 below.

iv. The source of the instream flow augmentation water Marysville agrees to use to comply with Sections 2(a) and (b) of this stipulation will be its Edwards Springs source, or more specifically, Edwards Spring Certificate S.W.C. No. 184 with a priority date of 7/14/21. This surface water right withdraws water on an annual basis from Edwards

LAW OFFICES OF
KEITHLY, WEED AND GRAAFSTRA, INC., P.S.
21 AVENUE A
SNOHOMISH, WASHINGTON 98290-2962
(360) 568-3119; FAX (360) 568-4437

Springs and has an instantaneous withdrawal rate (Qi) of 360 GPM, and an annual withdrawal rate (Qa) of 576 af/yr.

2. **STREAMFLOW/AUGMENTATION.**

a. For purposes of streamflow augmentation, Marysville agrees to provide for the direct, continuous discharge of 200 gallons per minute (gpm) of untreated spring water into Cougar Creek during the period of July 1 through September 30 from its Edwards Springs Collector System. However, because the Edwards Springs Collector System is gravity-fed, there may be fluctuations in the 200 gpm rate. Therefore, the 200 gpm discharge will be calculated and monitored by Marysville to achieve an average instantaneous discharge of 200 gpm with permissible fluctuations within the range of 160 gpm to 240 gpm during the months cited above.

b. For purposes of streamflow augmentation, Marysville agrees to provide for the direct, continuous discharge of 100 gallons per minute (gpm) of untreated spring water into Cougar Creek during the period of June 1 through June 30 and October 1 through October 31 from its Edwards Springs Collector System. However, because the Edwards Springs Collector System is gravity-fed, there may be fluctuations in the 100 gpm rate. Therefore, the 100 gpm discharge will be calculated and monitored by Marysville to achieve an average instantaneous discharge of 100 gpm with permissible fluctuations within the range of 60 gpm to 140 gpm during the months cited above.

LAW OFFICES OF
KEITHLY, WEED AND GRAAFSTRA, INC., P.S.
21 AVENUE A
SNOHOMISH, WASHINGTON 98290-2962
(360) 568-3119; FAX (360) 568-4437

c. Marysville agrees to secure all appropriate permits for the purpose of constructing a gravity-based collection and discharge facility capable of reliably providing the amounts of water cited in Sections 2(a) and 2(b) for streamflow augmentation from its Edwards Springs Collector System to Cougar Creek. (See **Attachment A** for schematic of collection/discharge system.) In the event any permit cannot be issued consistent with **Attachment A**, the parties hereto will meet and negotiate in good faith to revise this agreement in a manner to accomplish the same general purposes as outlined in Section 1(e)(i-iv) above.

d. The Tribes and DOE agree not to oppose the issuance of any and all state and local permits required of Marysville to construct the Cougar Creek discharge system cited in Section 2(c) so long as said permits are consistent with the discharge facility described in **Attachment A**, the terms of this agreement, and applicable laws.

3. **MONITORING/INSPECTION.**

a. Marysville will install a totalizing flow meter and pressure regulating valve to monitor and control the rate of release. Marysville will monitor the releases once per week during the four-month release period. Marysville will also test the water to be discharged for temperature and dissolved oxygen monthly during the four-month release period. Marysville will provide written reports of said testing and metering data to the Department of Ecology, NWRO-SHWR and the Tulalip Tribes Natural Resources Division no later than November 15 of each year.

LAW OFFICES OF
KEITHLY, WEED AND GRAAFSTRA, INC., P.S.
21 AVENUE A
SNOHOMISH, WASHINGTON 98290-2962
(360) 568-3119; FAX (360) 568-4437

b. Marysville agrees to permit a representative(s) from the Tulalip Tribes Natural Resources Division to inspect the collection, diversion, gauging and metering facilities constructed pursuant to Section 1 of this stipulation once a year, upon provision of 72 hours' notice to the Marysville Director of Public Works. Provided, however, that additional brief inspections may be made by Tulalip representatives at times when Marysville's personnel are otherwise planned to be present at the site. Marysville officials shall not unreasonably withhold approval for brief inspections.

4. **MAINTENANCE.** Marysville is responsible for all system maintenance. In the event inadequate maintenance results in non-compliance with the Streamflow Augmentation Project, all withdrawal under Ground Water Permit number G1-25182 shall stop pending the necessary maintenance or repairs.

5. **PERMIT ISSUANCE - EDWARDS SPRING WELL NO. 3.**

a. Within thirty (30) days of entry of this order, Ecology will issue to Marysville a temporary permit allowing beneficial use of water under Ground Water Application G1-25182. The Temporary Permit will contain conditions consistent with the terms of this Stipulation and Agreed Order of Dismissal and the Report of Examination for G1-25182 dated January 29, 1996. The Temporary Permit will be issued for a one-year period to allow permitting and construction of the Streamflow Augmentation Plan described in Attachment A of this agreement. In the event construction of the

LAW OFFICES OF
KEITHLY, WEED AND GRAAFSTRA, INC., P.S.
21 AVENUE A
SNOHOMISH, WASHINGTON 98290-2962
(360) 568-3119; FAX (360) 568-4437

augmentation plan is not completed during the term of the Temporary Permit, Marysville may request an extension. Progress toward permitting and construction will be a primary factor in the granting of an extension.

b. Within one hundred twenty (120) days of receiving written documentation of completion of construction of the improvements described in **Attachment A**, Ecology agrees to issue to Marysville a permit for Edwards Spring Well No. 3 which specifies:

i. The source and point of diversion consistent with the original Report of Examination dated January 29, 1996.

ii. A priority date of February 16, 1988.

iii. A maximum instantaneous quantity of 400 gpm.

iv. A maximum annual quantity of 451 acre-feet, supplemental to existing rights held by the City of Marysville with total annual quantity not to exceed 8,472 acre feet.

v. The purpose of use is municipal supply.

vi. The place of use consistent with the original Report of Examination dated January 29, 1996.

vii. The period of use is continuous, year-round.

viii. The permit shall contain the conditions stated in the original Report of Examination and the conditions contained in this Stipulation and Agreed

LAW OFFICES OF
KEITHLY, WEED AND GRAAFSTRA, INC., P.S.
21 AVENUE A
SNOHOMISH, WASHINGTON 98290-2962
(360) 568-3119; FAX (360) 568-4437

Order of Dismissal, insofar as they are not inconsistent.

ix. The permit shall state a date of beneficial use consistent with the temporary permit referenced in 5(a) herein.

6. **CHANGE APPLICATION.**

Marysville agrees that no later than June 30, 1997, it shall submit an application to Ecology NWRO to change the purpose of use of Surface Water Certificate S.W. No. 184 to add streamflow augmentation to the existing purpose of domestic supply, in order to allow the direct discharge of water to Cougar Creek as provided in this stipulation. Department of Ecology agrees to process the change application, pursuant to Chapters 90.03.380 and 90.44.100 RCW, as soon as practicable. Ecology makes no representation as to the result of this change application.

7. The Tulalip Tribes agree that they shall not protest Marysville change application as described in Section 6, nor appeal a decision by the Department of Ecology to approve and issue a change in purpose of use for Certificate S.W. No. 184 which complies with this Stipulation and applicable laws.

8. **DISPUTES.** If any party finds that the conditions of the permit are not being met or that the Plan requires modification to achieve the purposes of 1(e)(i-iv) herein, they shall notify the other parties in writing. The parties will negotiate in good faith to develop an appropriate modification to the Plan. Failure to reach agremeent will not deprive any party of other remedies

LAW OFFICES OF
KEITHLY, WEED AND GRAAFSTRA, INC., P.S.
21 AVENUE A
SNOHOMISH, WASHINGTON 98290-2962
(360) 568-3119; FAX (360) 568-4437

available by law. The parties agree that consideration has been given, and this Stipulation constitutes a contract and is enforceable as such. The parties agree that the Superior Court of the State of Washington shall have exclusive jurisdiction to enforce and/or interpret the provisions of this Stipulation and Agreed Order of Dismissal. Venue shall be in Snohomish County Superior Court.

9. **PARTICIPATION IN JOINT GRANT PROPOSAL.**

a. Marysville and the Tribes agree and pledge good faith efforts to explore the feasibility of developing a joint grant proposal to enhance and/or protect fishery habitat in the Stilliguamish Basin under the following conditions:

- By agreeing to participate in a joint grant project, neither Marysville nor the Tribes is obligated to reach agreement on a specific grant proposal or project.
- By agreeing to participate in a joint grant project, Marysville and the Tribes are in no way obligated to provide any monies, matching grant funds, or other financial contributions to secure a grant for a candidate project identified by the parties, but each may do so at the party's sole discretion.
- Marysville and the Tribes agree to pursue efforts to identify a joint grant proposal for a period of nine months, commencing on the date this stipulation is executed. If at the end of the nine-month period no joint grant proposal is agreed to or identified by the parties, the joint grant project shall be considered terminated, unless sufficient reason(s) exist for the parties to mutually agree to extend the time period. Under any circumstance, termination of the joint grant project without reaching agreement shall not be construed by any party to this agreement as evidence of breach or nonperformance of the terms of this stipulation.

10. **DISMISSAL WITH PREJUDICE.** In consideration of the commitments made by Marysville to develop and/or participate in the monitoring and joint grant program cited above, the Tribes

LAW OFFICES OF
KEITHLY, WEED AND GRAAFSTRA, INC., P.S.
21 AVENUE A
SNOHOMISH, WASHINGTON 98290-2962
(360) 568-3119; FAX (360) 568-4437

agree to dismissal with prejudice of their appeal to issuance by DOE of Ground Water Permit G1-25182 and PCHB No. 96-153.

11. The parties agree that this stipulation resolves all disputes arising from application No. G1-25182 and this appeal, PCHB 96-153. The parties agree that the Board may enter the following Agreed Order of Dismissal.

12. The parties agree that the commitments made in this Stipulation shall be in effect so long as Marysville's right to make full beneficial use of G1-25182 is authorized under law.

DATED this 7 day of May, 1997.

DEPARTMENT OF ECOLOGY

By _____
Ray Hellwig
SHWR Supervisor
NWRO

MORISSET, SCHLOSSER
AYER & JOZWIAK

By _____
Mason D. Morisset
WSBA #00273
Attorneys for The Tulalip
Tribes of Washington
(206) 386-5200

KEITHLY, WEED AND
GRAAFSTRA, INC., P.S.

By _____
GRANT K. WEED, WSBA #11243
Attorney for Respondent
City of Marysville

_____
THOMAS D. MORTIMER, JR.
WSBA #12244
Attorneys for Respondent
City of Marysville

LAW OFFICES OF
KEITHLY, WEED AND GRAAFSTRA, INC., P.S.
21 AVENUE A
SNOHOMISH, WASHINGTON 98290-2962
(360) 568-3119; FAX (360) 568-4437

agree to dismissal with prejudice of their appeal to issuance by DOE of Ground Water Permit G1-25182 and PCHB No. 96-153.

11. The parties agree that this stipulation resolves all disputes arising from application No. G1-25182 and this appeal, PCHB 96-153. The parties agree that the Board may enter the following Agreed Order of Dismissal.

12. The parties agree that the commitments made in this Stipulation shall be in effect so long as Marysville's right to make full beneficial use of G1-25182 is authorized under law.

DATED this _____ day of _____, 1997.

DEPARTMENT OF ECOLOGY

By_____
Ray Hellwig
SHWR Supervisor
NWRO

MORISSET, SCHLOSSER
AYER & JOZWIAK

By_____
Mason D. Morisset
WSBA #00273
Attorneys for The Tulalip
Tribes of Washington
(206) 386-5200

KEITHLY, WEED AND
GRAAFSTRA, INC., P.S.

By_____
GRANT K. WEED, WSBA #11243
Attorney for Respondent
City of Marysville

_____
THOMAS D. MORTIMER, JR.
WSBA #12244
Attorneys for Respondent
City of Marysville

LAW OFFICES OF
KEITHLY, WEED AND GRAAFSTRA, INC., P.S.
21 AVENUE A
SNOHOMISH, WASHINGTON 98290-2962
(360) 568-3119; FAX (360) 568-4437

agree to dismissal with prejudice of their appeal to issuance by DOE of Ground Water Permit G1-25182 and PCHB No. 96-153.

11. The parties agree that this stipulation resolves all disputes arising from application No. G1-25182 and this appeal, PCHB 96-153. The parties agree that the Board may enter the following Agreed Order of Dismissal.

12. The parties agree that the commitments made in this Stipulation shall be in effect so long as Marysville's right to make full beneficial use of G1-25182 is authorized under law.

DATED this _____ day of _____, 1997.

DEPARTMENT OF ECOLOGY

By_____
Ray Hellwig
SHWR Supervisor
NWRO

KEITHLY, WEED AND GRAAFSTRA, INC., P.S.

By Grant K. Weed
GRANT K. WEED, WSBA #11243
Attorney for Respondent
City of Marysville

MORISSET, SCHLOSSER AYER & JOZWIAK

By_____
Mason D. Morisset
WSBA #00273
Attorneys for The Tulalip Tribes of Washington
(206) 386-5200

Grant K. Weed for
THOMAS D. MORTIMER, JR.
WSBA #12244
Attorneys for Respondent
City of Marysville

LAW OFFICES OF
KEITHLY, WEED AND GRAAFSTRA, INC., P.S.
21 AVENUE A
SNOHOMISH, WASHINGTON 98290-2962
(360) 568-3119; FAX (360) 568-4437

AGREED ORDER OF DISMISSAL

Having reviewed the foregoing Stipulation and the file and pleadings herein, and it appearing that the parties have reached an agreement;

IT IS HEREBY ORDERED that the foregoing Stipulation is entered as an order of this Board, and this case, ***The Tulalip Tribes of Washington v. State of Washington Department of Ecology and the City of Marysville***, PCHB No. 96-153, is hereby DISMISSED with prejudice and without costs or attorney fees.

DATED this 9th day of May, 1997.

POLLUTION CONTROL HEARING BOARD

JAMES A. TUPPER, JR., Presiding

ROBERT V. JENSEN, Member

RICHARD C. KELLEY, Member

CHRISTINE O. GREGOIRE
Attorney General

By Jo Messex Casey
JO MESSEX CASEY
WSBA #19161
Assistant Attorney General
Attorney for Respondent
Department of Ecology

LAW OFFICES OF
KEITHLY, WEED AND GRAAFSTRA, INC., P.S.
21 AVENUE A
SNOHOMISH, WASHINGTON 98290-2962
(360) 568-3119; FAX (360) 568-4437

Approved as to form; notice
of presentation waived:

MORISSET, SCHLOSSER
AYER & JOZWIAK

By _____
MASON D. MORISSET
WSBA #273
Attorneys for Appellant
Tulalip Tribes of Washington

KEITHLY, WEED AND
GRAAFSTRA, INC., P.S.

By _____
GRANT K. WEED, WSBA #11243

_____
THOMAS D. MORTIMER, JR.
WSBA #12244
Attorneys for Respondent
City of Marysville

LAW OFFICES OF
KEITHLY, WEED AND GRAAFSTRA, INC., P.S.
21 AVENUE A
SNOHOMISH, WASHINGTON 98290-2962
(360) 568-3119; FAX (360) 568-4437

Approved as to form; notice
of presentation waived:

MORISSET, SCHLOSSER
AYER & JOZWIAK

By _____
MASON D. MORISSET
WSBA #273
Attorneys for Appellant
Tulalip Tribes of Washington

KEITHLY, WEED AND
GRAAFSTRA, INC., P.S.

By Grant K. Weed
GRANT K. WEED, WSBA #11243

Grant K. Weed for
THOMAS D. MORTIMER, JR.
WSBA #12244
Attorneys for Respondent
City of Marysville

LAW OFFICES OF
KEITHLY, WEED AND GRAAFSTRA, INC., P.S.
21 AVENUE A
SNOHOMISH, WASHINGTON 98290-2962
(360) 568-3119; FAX (360) 568-4437

ATTACHMENT A

EDWARD SPRINGS COLLECTOR SYSTEM
PROPOSED IMPROVEMENTS

DESCRIPTION

The attached Figure No. 1 illustrates an option to intercept, control, and meter flow from the Edward Springs Reservoir Screen Room piping and discharge to the nearby stream. The option proposed would provide gravity flow to the stream channel. The improvements would consist of installing a 6 inch tapping tee and 6 inch gate valve on the existing 18 inch main connecting the Screen Room with the Chlorine Room. Flow would be diverted through new 6 inch piping to a new flume structure located on the east bank of the stream channel. The flume would consist of an adjustable vertical weir, flume, ultrasonic level sensor, and a chart recorder mounted remotely in a nearby existing enclosure. Flow would exit the flume through new 12 inch piping discharging to the nearby stream.

OPERATION

The proposed improvements provide both flow control and metering capabilities, along with flexible operation. Throttling the 6 inch gate valve would regulate flow to the flume structure. Further adjustment and flow control is provided by adjusting the vertical weir to the desired elevation thus providing a relatively constant flow through the flume. Flow measurement would consist of the flume mounted in an open channel along with an ultra sonic level sensor mounted above the water surface. The ultra sonic sensor will transmit flow data to a chart recorder.

Flow through the flume structure would be regulated as agreed upon, consisting of 100 gpm for the months of June and October and 200 gpm from July through September. Flows would be verified based on a monthly average flow as established from chart recorder data. Diversion of flow would be halted during the remaining months.

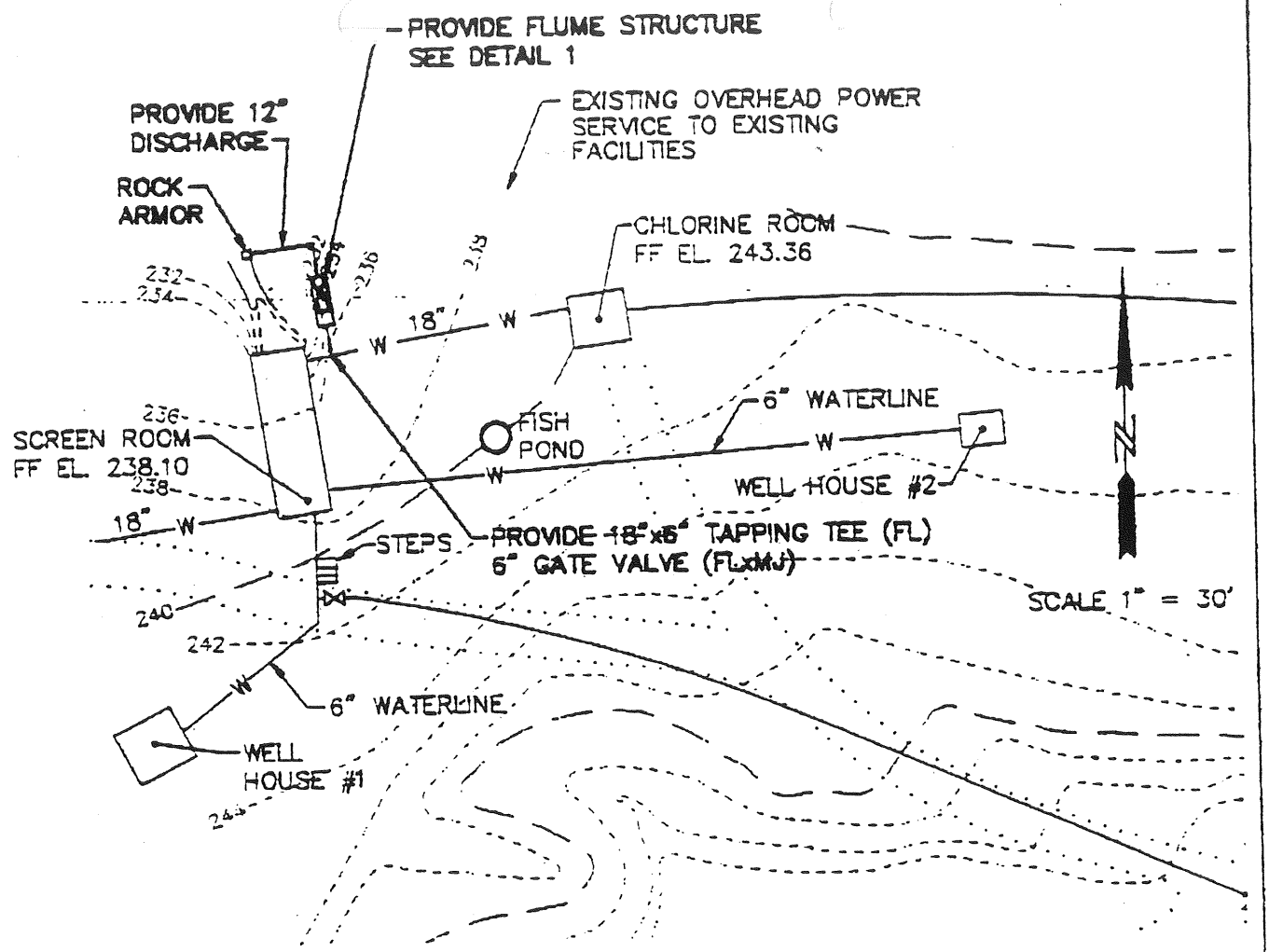

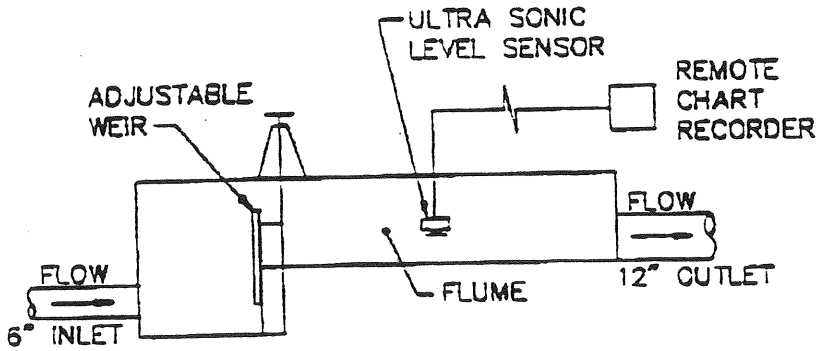

DETAIL NO. 1
N.T.S.

FIGURE 1
STREAM DISCHARGE PIPING

STATE OF WASHINGTON
DEPARTMENT OF ECOLOGY

REPORT OF EXAMINATION

TO APPROPRIATE PUBLIC WATERS OF THE STATE OF WASHINGTON

☐ Surface Water (issued in accordance with the provisions of Chapter 117, Laws of Washington for 1917, and amendments thereto, and the rules and regulations of the Department of Ecology.)

☒ Ground Water (issued in accordance with the provisions of Chapter 263, Laws of Washington for 1945, and amendments thereto, and the rules and regulations of the Department of Ecology.)

PRIORITY DATE	APPLICATION NUMBER	PERMIT NUMBER	CERTIFICATE NUMBER
February 16, 1988	G1-25182		

NAME
City of Marysville

ADDRESS (STREET)	(CITY)	(STATE)	(ZIP CODE)
514 Delta Avenue	Marysville	Washington	98270

PUBLIC WATERS TO BE APPROPRIATED

SOURCE
Well

TRIBUTARY OF (IF SURFACE WATERS)

MAXIMUM CUBIC FEET PER SECOND	MAXIMUM GALLONS PER MINUTE	MAXIMUM ACRE-FEET PER YEAR
	400	451*

QUANTITY, TYPE OF USE, PERIOD OF USE

Municipal supply - continuously

*Annual quantity is supplemental to existing rights held by City of Marysville. Total annual quantity not to exceed 8,472 acre-feet.

LOCATION OF DIVERSION/WITHDRAWAL

APPROXIMATE LOCATION OF DIVERSION–WITHDRAWAL
1000 feet north and 800 feet east of SW corner of Section 24

LOCATED WITHIN (SMALLEST LEGAL SUBDIVISION)	SECTION	TOWNSHIP N.	RANGE, (E. OR W.) W.M.	W.R.I.A.	COUNTY
SW¼ SW¼	24	31	4E	5	Snohomish

RECORDED PLATTED PROPERTY

LOT	BLOCK	OF (GIVE NAME OF PLAT OR ADDITION)

LEGAL DESCRIPTION OF PROPERTY ON WHICH WATER IS TO BE USED

The service area of City of Marysville, Snohomish County, within Sections 1, 2, 3, Township 29N, Range 5E; Sections 1-4, 9-16, 21-29, 32-36, Township 30N, Range 5E; Section 6, 7, 16, 19, 30, Township 30N, Range 6E; Sections 20, 21, 28-36, Township 31N, Range 5E; also including any areas identified in updates to Water System Plans. Plus interties with Everett, Arlington, Seven Lakes, Tulalip, and Snohomish County PUD (emergency only).

DESCRIPTION OF PROPOSED WORKS

Well, 12" X 200'

DEVELOPMENT SCHEDULE

BEGIN PROJECT BY THIS DATE:	COMPLETE PROJECT BY THIS DATE:	WATER PUT TO FULL USE BY THIS DATE:
Begun	Complete	2 years from permit issuance

REPORT

BACKGROUND:

Application Number:	G1-25182
Applicant:	City of Marysville
Date Application Received:	February 16, 1988
Proposed use:	Municipal supply
Legal notice published:	The Marysville Globe
Date:	March 30 and April 6, 1988
Protests:	None

INVESTIGATIONS:

Application is made for withdrawal from a well located in the SW¼ SW¼ Section 24, T. 31 N., R. 4 E., Snohomish County, for 400 gallons per minute (gpm) to be used for municipal supply for the City of Marysville.

A technical assistance visit was conducted on November 27, 1995 to discuss water rights and water use. Marysville has been buying approximately half of their water from the City of Everett since July 1992. Investigation consisted of a review of office records including well reports, topographical maps, information from technical visit, applicant's file, and water right statutes and rules.

EXISTING WATER RIGHTS:

Primary water rights are those issued for an instantaneous quantity (gpm) and an annual quantity. Supplemental refers to water rights issued for additional instantaneous quantity (gpm), but does not allocate additional acre-feet.

The City of Marysville holds the following water rights:

Record No.	Priority Date	Instantaneous Quantity	Annual Quantity	Primary or Supplemental
SWC 184	07-14-21	.8 cfs	576	Primary
SWC 2180	11-14-31	2.3 cfs	1656	Primary
GWC 286	01-12-46	300 gpm	160	Primary
GWC 1152	03-07-52	300 gpm	320	Supplemental
GWC 2096	03-07-52	500 gpm	800	Supplemental
GWC 3100	02-14-56	1000 gpm	1344	Supplemental
GWC 4155	05-05-55	57 gpm	91	Supplemental
GWC 5469	07-27-64	1000 gpm	1176	Supplemental
GWC 6980	06-19-67	550 gpm	880	Primary
G1-00675C	07-14-70	2250 gpm	3600	Primary
G1-23487C	10-17-79	1000 gpm	1600	Primary

Total of primary rights is 8,472 acre-feet per year.

This application is for Edward Spring Well #3, located in the SW¼ SW¼ Section 24, T. 31, R. 4 E. in water resource inventory area (WRIA) 5.

Findings:

1. The proposed use of water is a beneficial use of water.

2. Based on the location, depth, well report, and topographical maps, the applicant's well is completed in unconsolidated glacial deposits hydraulically connected to the Stillaguamish River. Groundwater is therefore tributary to surface water. No instream flows have been set for the Stillaguamish River in the Washington Administrative Code (WAC).

3. Approval of instantaneous quantity (gpm) will not increase any possible impact to stream flows. The effect will be to add a point of withdrawal to the existing water system while requiring the water system to stay within the previously allocated annual quantity.

4. Water is available for additional instantaneous withdrawal.

5. The proposed appropriation will not be detrimental to the public welfare.

6. The proposed withdrawal of groundwater will not impair existing water rights. The City of Marysville has 7 water rights in this vicinity, 3 surface water, one reservoir, and 3 ground water rights. No other entities have water rights in this section.

DISCUSSION:

Total water consumption for 1994 for Marysville was 5,152 acre-feet (1,678 MG), 2,576 of which was purchased from Everett. The total number of acre-feet allocated on previous water right certificates appears to be 8,472 acre-feet. No additional acre-feet is allocated, as less than half that already allocated is used by Marysville.

The well, called Edwards Spring Well No. 3, produces 400 gpm. Based on 70% efficiency, this well can produce an annual quantity of 451 acre-feet. This will be the annual quantity granted in a permit, if issued, and the total annual withdrawal from all sources will not exceed 8,472 acre-feet.

CONCLUSIONS:

In accordance with chapters 90.03 and 90.44 RCW, it is concluded that water is available for the beneficial use proposed, and that the appropriation will not adversely affect existing water rights or be detrimental to the public welfare, provided the conditions and provisions are met.

RECOMMENDATION:

I recommend that this application be approved, and a permit issued for 400 gallons per minute, 451 acre-feet per year. Total annual quantity authorized under all rights not to exceed 8,472 acre-feet. The permit should issue subject to existing rights and the following provisions:

> An approved measuring device shall be installed and maintained in accordance with RCW 90.03.360, WAC 508-64-020 through 508-64-040 (Installation, operation and maintenance requirements enclosed). Meter readings shall be recorded monthly and this data shall be maintained and be made available to the Department of Ecology upon request.
>
> In order to monitor the resource, static water level (SWL) shall be measured at least once each month. Measurements shall be taken after the pump has been shut off and the water level in the well has been stabilized. The data shall be maintained and made available to Ecology upon request. However, Ecology's Water Resources Section (NWRO) shall be notified if the SWL is determined to be below the level normally recorded at that time of year. See enclosed form.
>
> This permit is subject to the implementation of the minimum requirements established in the Conservation Planning Requirements: Guidelines for Public Water Systems Regarding Water Use Reporting, Demand Forecasting Methodology and Conservation Programs, March 1994, which are enclosed.

REPORT BY: Alice McKelly DATE: 1-29-96

APPENDIX K

Water Quality Monitoring Plan

WATER QUALITY MONITORING PLAN

INTRODUCTION

This Water Quality Monitoring Plan presents the requirements for monitoring water quality at the sources and in the distribution system in accordance with the drinking water regulations contained in Washington Administrative Code (WAC) 246-290-300. This plan also provides a summary of the existing water system facilities and operation.

EXISTING WATER SYSTEM DESCRIPTION

WATER SYSTEM INFORMATION

The City of Marysville (City) is a municipal corporation that owns and operates a public water system within its corporate boundaries. Water system data on file at the Washington State Department of Health (DOH) for the City's system is shown in **Table 1**.

Table 1
Water System Information

Information Type	Description
System Type	Group A - Community - Public Water System
System Name	Marysville Utilities
County	Snohomish
DOH System ID Number	51900C
Owner Number	003633
Address	20 Columbia Avenue, Marysville, WA 98270
Contact	Mr. Douglas Byde, Public Works Superintendent
Contact Phone Number	(360) 363-8125

WATER SYSTEM OPERATION AND CONTROL

The existing water system is divided into 11 pressure zones, due to the wide range of elevations that are served.

The 510 Zone is supplied with water from the Cedarcrest Booster Pump Station (BPS). Pressures in the 510 Zone are established by the Highway 9 Reservoir. This Zone currently serves customers within an elevation range between approximately 213 feet and 440 feet, and is located at the eastern extent of the system, primarily between 73rd Avenue NE and Highway 9.

The 460 Zone is supplied with water from the Lake Goodwin Well and from the Edward Springs BPS. Pressures in the 460 Zone are established by the Lake Goodwin Standpipe. This zone currently serves customers within an elevation range between approximately 286 feet and 341 feet, and is located at the northwestern extent of the system, along Lakewood Road north of the Edward Springs Reservoir.

The 440 Zone is a small zone supplied by two pressure reducing stations that establish pressures in the zone. The 7701 Grove Street NE pressure reducing valve (PRV) provides supply from the Everett Intertie/JOA Pipeline and the 7311 76th Drive NE PRV provides supply from the 510 Zone. The 440 Zone currently serves customers immediately south and east of the Cedarcrest Reservoir, within an elevation range between approximately 158 feet and 268 feet.

The 415 Zone is supplied from the 510 Zone via the 8017 44th Street NE PRV, and the 8117 Soper Hill Road PRV. Pressures in the zone are established by these two PRVs. This zone currently serves customers within an elevation range between approximately 64 feet and 300 feet, and is located at the south end of the system, in the area around the Sunnyside Reservoir.

The 360 Zone is currently supplied by several pressure reducing stations, a flow control station, and a pressure sustaining station. Supply to the zone is primarily provided by the Everett intertie. The zone will also be supplied by the Sunnyside Wells once the treatment facility is completed in 2017. The 360 Zone is comprised of two separate areas. Pressures in the North 360 Zone are established by the Getchell Reservoir, and pressures in the South 360 Zone are established by the Sunnyside Reservoir. The 7301 52nd Street NE PRV, the 7421 78th Street NE PRV, and the 7311 76th Drive NE PRV can supply the 360 Zone from the 510 Zone. The Sunnyside flow control valve (FCV), the 7528 64th Street NE PRV, the 7609 84th Street NE PRV, the 7701 Grove Street NE PRV, and the Getchell pressure sustaining valve (PSV) supply the 360 Zone from the Everett Intertie/JOA Pipeline. The 360 Zone currently serves customers within an elevation range between approximately 75 feet and 292 feet.

The 327 Zone is supplied via a pressure sustaining valve station from the 460 Zone. This zone currently serves customers within an elevation range between approximately 140 feet and 253 feet, and is located in the area north of the Forty Five Road, west of 11th Avenue NE, and south of 172nd Street NE. Pressures in the 327 Zone are established by the 327 Zone Reservoir.

The 285 Zone is supplied by three pressure reducing stations: the 6513 52nd Street NE PRV, the 6802 40th Street NE PRV, and the 6913 Sunnyside Boulevard PRV, all from the 415 Zone. Pressures in the zone are established by these PRVs. This zone currently serves customers within an elevation range between approximately 21 feet and 184 feet, and is located to the west of the 415 Zone in the south end of the system.

The 260 Zone is a small zone supplied by one pressure reducing station from the North 360 Zone. The 6605 100th Street NE PRV No. 2 establishes the pressure in the zone. The 260 Zone currently serves customers within an elevation range between approximately 81 feet and 144 feet, and is approximately bounded by 60th Avenue NE to the west, 67th Avenue NE to the east, 108th Street NE to the north, and 100th Street NE to the south.

The 240 Zone is the largest zone by area in the system. It is supplied by the Edward Springs spring source and wells, the Stillaguamish Ranney Well Collector, and several pressure reducing stations. The 6605 100th Street NE PRV No. 1, 6831 52nd Street NE PRV, 7000 64th Street NE PRV, 6904 71st Avenue NE PRV, and 7309 84th Street NE PRV all supply the 240 Zone from the 360 Zone. The 240 Zone is comprised of two separate areas. The first, larger area comprises the

entire north-central part of the system, east of the 327 Zone and north of approximately 93rd Place NE. The second, smaller area is approximately bounded by 60th Drive NE to the west, 71st Avenue NE to the west, 88th Street NE to the north, and 52nd Street NE to the south. Pressures within the North 240 Zone are established by the Edward Springs Reservoir and the Wade Road Reservoir, and pressures in the South 240 Zone are established by four of the PRVs. The 240 Zone currently serves customers within an elevation range between approximately 22 feet and 195 feet. Two of the Tulalip Interties are also served by the North 240 Zone.

The 203 Zone is a small zone supplied by one pressure reducing station, the 3508 90th Street NE PRV, from the North 240 Zone. The PRV station establishes the pressures in the zone. This zone currently serves customers along Grannis Road/36th Avenue NE, near the 88th Street NE on ramp to I-5, within an elevation range between approximately 40 feet and 51 feet.

The 170 Zone is supplied by pressure reducing stations and a flow control station. The 9700 State Avenue NE PRV, the 9509 45th Drive NE PRV, the 9804 48th Drive NE PRV, the 9600 51st Avenue NE PRV, the 9201 55th Avenue NE PRV, the 5801 Sunnyside Boulevard PRV, the 9135 61st Drive NE PRV, the 6213 83rd Place NE PRV, the 6502 64th Street NE PRV, the 9135 62nd Drive NE PRV, the 6621 79th Place NE PRV, the 6629 88th Street NE PRV, and the 7216 71st Avenue NE PRV supply the 170 Zone from the 240 Zone. The 7300 71st Avenue NE PRV and the Cedarcrest FCV supply the 170 Zone from the Everett Intertie/JOA Pipeline via the 440 Zone. One of the Tulalip Interties is served by the 170 Zone. This zone serves customers within an elevation range between approximately 5 feet and 83 feet, and is located in the area approximately bounded by 19th Avenue NE in the west, 67th Avenue NE in the east, 98th Place NE in the north, and 52nd Street NE in the south.

Pressure Zones

A list of the City's existing pressure zones and their respective 2014 demand is presented in **Table 2**.

Table 2
Pressure Zones

Pressure Zone	2014 Annual Consumption (gallons)	Average Daily Demand (gpm)	Percent of Total Demand (%)
JOA	195,201,843	371	7.9%
510	191,911,639	365	7.8%
460	3,374,897	6	0.1%
415	70,133,224	133	2.8%
360/440	83,132,214	158	3.4%
327	2,906,755	6	0.1%
285	48,059,784	91	2.0%
260	16,312,562	31	0.7%
240	1,269,561,131	2,415	51.6%
203	16,989,277	32	0.7%
170	564,836,545	1,075	22.9%
Total	2,462,419,872	4,685	100%

Water Sources

A list of the City's existing water sources is presented in **Table 3**.

Table 3
Water Sources

Well	Pressure Zone	Year Installed	Use	Existing Pumping Capacity (gpm)	Well Depth (feet)	Well Diameter (inches)	Pump Type	Pump Motor Size (hp)	Water Treatment
Stillaguamish Ranney Well Collector	240 Zone	1978	Active	2,250	n/a	n/a	(2) Submersible	(2) 100	Membrane, Chlorine
Edward Springs Spring Source	240 Zone	1930s	Active	760	n/a	n/a	Centrifugal	(2) 3	Chlorine, UV
Edward Springs Well No. 1R	240 Zone	2008	Active	170	182	12	Submersible	15	Chlorine
Edward Springs Well No. 2	240 Zone	Prior to 1960[1]	Active	225	150	unknown	Submersible	15	Chlorine
Edward Springs Well No. 3	240 Zone	1987 [1]	Active	300	181	unknown	Submersible	25	Chlorine
Lake Goodwin Well	460 Zone	1970	Active	350	450	unknown	Vertical Turbine	50	Chlorine
Highway 9 Well	510 Zone	1981	Offline[2]	n/a	270	unknown	n/a	n/a	n/a
Sunnyside Well No. 1R	360 Zone	2009	Offline[2]	n/a	278	16	n/a	n/a	n/a
Sunnyside Well No. 2	360 Zone	1965	Offline[2]	n/a	328	16	Vertical Turbine	100	n/a

1 = Rehabilitated in 2004.
2 = Currently offline for water quality purposes.

Water Storage

A list of the City's existing water storage facilities is presented below in **Table 4**.

Table 4
Water Storage Facilities

Reservoir	Approximate Location	Pressure Zone	Year Constructed	Material	Capacity (MG)	Diameter (feet)	Base Elev. (feet)	Overflow Elev. (feet)
Edward Springs Reservoir	614 Lakewood Rd	240 Zone	1975	PVC-lined embankment	6.0	Irregular	223	239.4
Stillaguamish River WTP Clearwell	17906 43rd Ave NE	Stillaguamish	2006	Steel	0.2	39.0	130	152.5
Wade Road Reservoir	7011 Wade Rd	240 Zone	2007	Steel	3.0	120.6	204	239.4
327 Zone Reservoir	614 Lakewood Rd	327 Zone	2008	Welded Steel	0.7	66.0	296	329
Getchell Reservoir	8210 98th Place NE	360 Zone	1995	Pre-stressed Concrete	6.0	182.0	328	360
Cedarcrest Reservoir	7300 71st Ave NE	170 Zone	1987	Pre-stressed Concrete	3.5	150.0	146.2	170.5
Highway 9 Reservoir	8812 64th St NE	510 Zone	1998	Steel	1.8	77.0	457.5	510
Sunnyside Reservoir	4021 71st Ave NE	360 Zone	2008	Welded Steel	3.0	89.0	296	360
Lake Goodwin Standpipe	3914 176th St NW	460 Zone	unknown	Corrugated Metal Pipe	0.003	4.0	427	459

Pump Stations

A list of the City's existing booster pump stations is presented in **Table 5**.

Table 5
Booster Pump Stations

Pump Station	Suction Pressure Zone	Discharge Pressure Zone	Year Constructed	Existing Pumping Capacity	Number of Pumps	Pump Type	Pump Motor Size (hp)
Edward Springs BPS	240 Zone	460 Zone	2001	3,500	2	Vertical Turbine	2 (75)
Cedarcrest BPS	170 Zone	510 Zone	1987	2,400	3	Submersible	3 (150)
Stillaguamish WTP BPS	Stillaguamish	240 Zone	2006	2,200	3	Centrifugal	3 (50)

Pressure Reducing, Pressure Sustaining, and Flow Control Stations

A list of the City's existing pressure reducing stations is presented below in **Table 6**.

Table 6
Pressure Reducing Stations

Station Name	Upper Pressure Zone	Lower Pressure Zone	Year Installed/ Rebuilt
8117 Soper Hill Rd PRV	510	415	2012
8017 44th St NE PRV	510	415	unknown
7301 52nd St NE PRV	510	360	1994
7421 78th St NE PRV	510	360	1990, rebuilt 2012
7311 76th Dr NE PRV	510	360	1990, rebuilt 2012
Edward Springs PSV	460	327	unknown
Sunnyside FCV	Everett	360	unknown
7528 64th St NE PRV	Everett	360	1994, rebuilt 2014
7609 84th St NE PRV	Everett	360	1996, rebuilt 2016
7701 Grove St NE PRV	Everett	440	1990, rebuilt 2012
Getchell PSV	Everett	360	2014
6513 52nd St NE PRV	415	285	unknown
6802 40th St NE PRV	415	285	unknown
6913 Sunnyside Blvd PRV	415	285	2013
6605 100th St NE PRV No. 2	360	260	unknown
6605 100th St NE PRV No. 1	360	240	1997, rebuilt 2012
6831 52nd St NE PRV	360	240	1963
7000 64th St NE PRV	360	240	1994, rebuilt 2013
6904 71st Ave NE PRV	360	240	unknown
7309 84th St NE PRV	360	240	1996, rebuilt 2016
7300 71st Ave NE PRV	440	170	1997
Cedarcrest FCV	440	170	2016
3508 90th St NE PRV	240	203	2002
9700 State Ave NE PRV	240	170	unknown
9509 45th Dr NE PRV	240	170	2000
9804 48th Dr NE PRV	240	170	1990, rebuilt 2011
9600 51st Ave NE PRV	240	170	Rebuilt 2011
9201 55th Ave NE PRV	240	170	Rebuilt 2011
5801 Sunnyside Blvd PRV	240	170	2005
9135 61st Dr NE PRV	240	170	Rebuilt 2014
6213 83rd Pl NE PRV	240	170	1996, rebuilt 2013
6502 64th St NE PRV	240	170	Rebuilt 2011
9135 62nd Dr NE PRV	240	170	Rebuilt 2014
6621 79th Pl NE PRV	240	170	1998, rebuilt 2013
6629 88th St NE PRV	240	170	1996
7216 71st Ave NE PRV	240	170	1987

Water Treatment

The City's water system is comprised of multiple treated sources including water purchased from the City of Everett. While the Edward Springs source is GUI, it is operated under the filtration avoidance clause of the Surface Water Treatment Rule since the City developed a Watershed Management Plan and have implemented chlorine and UV disinfection, contact time, site security and water quality monitoring improvements. Water from the Stillaguamish River is filtered and disinfected at the Stillaguamish River Water Treatment Plant. This plant was built and commissioned in 2006 and treats the river water using low-pressure, submerged membrane filtration. Edward Springs, Edward Springs Wells, Stillaguamish River, Lake Goodwin Well and the Everett JOA Intertie are all chlorinated with 12.5-percent sodium hypochlorite. Water received from Everett is fluoridated while the City's other sources are not; therefore, customers may receive water that is fluoridated, non-fluoridated or only partially fluoridated depending on water system operating conditions. Construction of the Sunnyside Well Treatment Facility is anticipated to be completed in 2017. Once complete, the facility will include on-site sodium hypochlorite generation and an oxidation/filtration treatment process to remove iron and manganese from Sunnyside Well Nos. 1R and 2.

SOURCE WATER QUALITY MONITORING

The City is required to perform water quality monitoring at each of its active sources for inorganic chemicals and physical substances, organic chemicals, unregulated inorganic and organic chemicals, and radionuclides. The monitoring requirements that the City must comply with are specified in WAC 246-290-300. The City must comply with the requirements for surface water purveyors as well as groundwater system monitoring. **Table 7** summarizes the source water quality monitoring requirements through 2021. The table is based on information available at the time that this document was prepared and may change in the future.

Table 7
Monitoring Schedule for 2015 through 2021

When	Monitor	Monitoring Group	Test Method	Upon Violation
2015				
Feb-15	8 Sites in Distribution System	Stage 2 DBPs	TTHM and HAA5	1 per Site per Quarter
May-15	8 Sites in Distribution System	Stage 2 DBPs	TTHM and HAA5	1 per Site per Quarter
Jun-15	S05	Arsenic, Iron, Manganese	IOC	Quarterly for 2 Quarters
Jul-15	All Active Sources	Nitrate	NIT	Quarterly for 1 Year
Jul-15	30 Sites in Distribution System	Lead and Copper	LCR	(2) - 6 Mo. Periods
Aug-15	8 Sites in Distribution System	Stage 2 DBPs	TTHM and HAA5	1 per Site per Quarter
Aug-15	S06	Manganese	IOC	Quarterly for 2 Quarters
Nov-15	S04 & S05	Radionuclides	RAD	Quarterly until less than MCL
Nov-15	8 Sites in Distribution System	Stage 2 DBPs	TTHM and HAA5	1 per Site per Quarter
2016				
Feb-16	8 Sites in Distribution System	Stage 2 DBPs	TTHM and HAA5	1 per Site per Quarter
May-16	8 Sites in Distribution System	Stage 2 DBPs	TTHM and HAA5	1 per Site per Quarter
May-16	S01	Arsenic	IOC	Quarterly for 2 Quarters
Jun-16	S06	IOC and Physical	IOC	Quarterly for 2 Quarters
Jul-16	All Active Sources	Nitrate	NIT	Quarterly for 1 Year
Aug-16	8 Sites in Distribution System	Stage 2 DBPs	TTHM and HAA5	1 per Site per Quarter
Aug-16	S04	Volatile Organic Chemicals	VOC - 524.2	Quarterly for 2 Quarters
Nov-16	8 Sites in Distribution System	Stage 2 DBPs	TTHM and HAA5	1 per Site per Quarter
2017				
Feb-17	8 Sites in Distribution System	Stage 2 DBPs	TTHM and HAA5	1 per Site per Quarter
May-17	8 Sites in Distribution System	Stage 2 DBPs	TTHM and HAA5	1 per Site per Quarter
Jul-17	All Active Sources	Nitrate	NIT	Quarterly for 1 Year
Aug-17	8 Sites in Distribution System	Stage 2 DBPs	TTHM and HAA5	1 per Site per Quarter
Nov-17	8 Sites in Distribution System	Stage 2 DBPs	TTHM and HAA5	1 per Site per Quarter
2018				
Feb-18	8 Sites in Distribution System	Stage 2 DBPs	TTHM and HAA5	1 per Site per Quarter
May-18	8 Sites in Distribution System	Stage 2 DBPs	TTHM and HAA5	1 per Site per Quarter
May-18	S05	Volatile Organic Chemicals	VOC - 524.2	Quarterly for 2 Quarters
Jul-18	All Active Sources	Nitrate	NIT	Quarterly for 1 Year
Aug-18	8 Sites in Distribution System	Stage 2 DBPs	TTHM and HAA5	1 per Site per Quarter
Aug-18	30 Sites in Distribution System	Lead and Copper	LCR	(2) - 6 Mo. Periods
Sep-18	One Site in Distribution	Asbestos	ASB	Quarterly for 2 Quarters
Nov-18	8 Sites in Distribution System	Stage 2 DBPs	TTHM and HAA5	1 per Site per Quarter
2019				
2019	All Active Sources	Unregulated Contaminants	UCMR 4	1 per Site per Quarter for 1 Year
Feb-19	8 Sites in Distribution System	Stage 2 DBPs	TTHM and HAA5	1 per Site per Quarter
May-19	8 Sites in Distribution System	Stage 2 DBPs	TTHM and HAA5	1 per Site per Quarter
Jul-19	All Active Sources	Nitrate	NIT	Quarterly for 1 Year
Aug-19	S05 & S09	IOC and Physical	IOC	Quarterly for 2 Quarters
Aug-19	8 Sites in Distribution System	Stage 2 DBPs	TTHM and HAA5	1 per Site per Quarter
Aug-19	All Active Sources	Volatile Organic Chemicals	VOC - 524.2	Quarterly for 2 Quarters
Nov-19	8 Sites in Distribution System	Stage 2 DBPs	TTHM and HAA5	1 per Site per Quarter
2020				
Feb-20	8 Sites in Distribution System	Stage 2 DBPs	TTHM and HAA5	1 per Site per Quarter
May-20	8 Sites in Distribution System	Stage 2 DBPs	TTHM and HAA5	1 per Site per Quarter
May-20	S01, S06, S09 & S11	Radionuclides	RAD	Quarterly until less than MCL
Jul-20	All Active Sources	Nitrate	NIT	Quarterly for 1 Year
Aug-20	8 Sites in Distribution System	Stage 2 DBPs	TTHM and HAA5	1 per Site per Quarter
Aug-20	S01, S06, S09 & S11	Radionuclides	RAD	Quarterly until less than MCL
Aug-20	S04, S05 & S09	IOC and Physical	IOC	Quarterly for 2 Quarters
Nov-20	8 Sites in Distribution System	Stage 2 DBPs	TTHM and HAA5	1 per Site per Quarter
2021				
Feb-21	8 Sites in Distribution System	Stage 2 DBPs	TTHM and HAA5	1 per Site per Quarter
May-21	8 Sites in Distribution System	Stage 2 DBPs	TTHM and HAA5	1 per Site per Quarter
May-21	All Active Sources	Herbicides	VOC - 524.2	Quarterly for 2 Quarters
May-21	S04 & S05	Radionuclides	RAD	Quarterly until less than MCL
Jul-21	All Active Sources	Nitrate	NIT	Quarterly for 1 Year
Aug-21	8 Sites in Distribution System	Stage 2 DBPs	TTHM and HAA5	1 per Site per Quarter
Aug-21	30 Sites in Distribution System	Lead and Copper	LCR	(2) - 6 Mo. Periods
Aug-21	All Active Sources	Volatile Organic Chemicals	VOC - 524.2	Quarterly for 2 Quarters
Aug-21	S04, S05, S09 & S11	IOC and Physical	IOC	Quarterly for 2 Quarters
Aug-21	S04 & S05	Radionuclides	RAD	Quarterly until less than MCL
Nov-21	8 Sites in Distribution System	Stage 2 DBPs	TTHM and HAA5	1 per Site per Quarter

MONITORING REQUIREMENTS AND PROCEDURES

Inorganic Chemical and Physical – A minimum of one sample shall be taken after treatment at the entry point to the distribution system for each source. If a maximum contaminated level (MCL) is exceeded, quarterly sampling is required for at least two quarters. According to the City's water quality monitoring schedule generated in 2015, the City has a waiver for a 9 year period. However, arsenic, nitrate, iron, manganese and asbestos shall be monitored as discussed below.

Monitoring for nitrate shall be accomplished once per year. The repeat monitoring frequency shall be quarterly for at least 1 year following any one sample in which the concentration is greater than or equal to 50 percent of the MCL for nitrate or nitrite.

Monitoring for asbestos is required once every 9 years. Systems not vulnerable to asbestos contamination at the source or in the distribution system (due to asbestos cement pipe) may apply to the state for a waiver of the monitoring requirements. The City should sample the distribution system for asbestos in September 2018. A sample must be taken at a tap served by an asbestos cement pipe where asbestos contamination is most likely to occur. If the MCL is exceeded, quarterly sampling is required for at least two quarters.

Monitoring for arsenic is required once every three years at Edward Springs, the Stillaguamish River, and Edward Springs Well 3. If the MCL is exceeded, quarterly sampling is required for at least two quarters.

Monitoring for manganese is required once every three years at Lake Goodwin Well, Edward Springs Well 2, and Edward Springs Well 3. If the secondary MCL is exceeded, quarterly sampling is required for at least two quarters.

Monitoring for iron is required once every three years at Lake Goodwin Well. If the secondary MCL is exceeded, quarterly sampling is required for at least two quarters.

Volatile Organic Chemicals – A minimum of one sample shall be taken after treatment at the entry point to the distribution system for each source. Monitoring for volatile organic chemicals shall be accomplished once every 3 years for each compliance period. If an MCL is exceeded, quarterly sampling is required for at least two quarters. The state may then allow annual monitoring if the results are satisfactory. After three consecutive annual samples that comply with the MCLs, a waiver for reduced monitoring (once every 3-year compliance period) may be applied for again. The City's sources all currently have a 6-year volatile organic chemical (VOC) waiver and the next VOCs sample should be collected in August 2019 for Edward Springs, August 2016 for the Stillaguamish River, May 2018 for Lake Goodwin Well, and August 2019 for Edward Springs Wells 2, 3 and 1R.

Synthetic Organic Chemicals – A minimum of one sample shall be taken after treatment at the entry point to the distribution system for each source. Monitoring for synthetic organic chemicals (SOCs) shall be accomplished once every 3 years for each compliance period if a monitoring waiver is not provided by the state. If an MCL is exceeded, quarterly sampling is required for at least two quarters. The state may then allow annual monitoring if the results are satisfactory. After three consecutive annual samples that comply with the MCLs, a waiver for reduced monitoring may be applied for again. The City was granted a monitoring waiver for the 2014 through 2016 compliance periods for pesticides and soil fumigants. The next herbicides samples should be collected in May 2021 for Edward Springs, the Stillaguamish River, Lake Goodwin Well, and Edward Springs Wells 3

and 1R. Herbicides were sampled at Edward Springs Well 2 in 2015 and another sample is not expected until 2024.

Unregulated Inorganic Chemicals – Sulfate is the only unregulated inorganic chemical that must be monitored under the current State regulations. A minimum of one sample shall be taken after treatment at the entry point to the distribution system for each source. Monitoring is required at least once every five years, unless a waiver is granted by the State. The City monitors for sulfate when monitoring is performed for regulated inorganic compounds.

Unregulated Volatile Organic Chemicals – A minimum of one sample shall be taken after treatment at the entry point to the distribution system for each source. Monitoring is required at least once every five years. The City monitors for unregulated volatile organic chemicals when samples for regulated volatile organic chemicals are taken.

Unregulated Synthetic Organic Chemicals – A minimum of one sample shall be taken after treatment at the entry point to the distribution system for each source. Monitoring is required at least once every five years, unless a waiver is granted by the State. The City monitors for unregulated SOCs when samples for regulated SOCs are taken.

Radionuclides – A minimum of one sample shall be taken after treatment at the entry point to the distribution system for each source. Initial monitoring for gross alpha particle radioactivity, radium-226 and radium-228 required four consecutive quarterly samples. Monitoring thereafter requires four consecutive quarterly samples at least once every 48 months. The analysis for radium-226 and radium-228 may be omitted, if the results from the gross alpha particle radioactivity analysis are less than 5 pCi/L. In addition, if the results of the initial analysis are less than half of the established MCL, the required monitoring may be reduced to a single sample collected every 48 months. The initial radionuclide samples resulted in levels much less than the MCL, if detectable at all, and the City may now monitor for radionuclides once every 6 years. For the Stillaguamish River and Lake Goodwin Well, the next gross alpha and radium-228 sampling is required in November 2015 and in 2021. For Edward Springs, and Edward Springs Wells 2, 3 and 1R, gross alpha and radium-228 sampling are required in 2020.

DISTRIBUTION SYSTEM WATER QUALITY MONITORING

The City is required to perform water quality monitoring within the distribution system for coliform bacteria, disinfectant (chlorine) residual concentration, disinfection by-products, lead and copper, and asbestos in accordance with Chapter 246-290 WAC.

MONITORING REQUIREMENTS AND PROCEDURES

Coliform Bacteria Routine Sampling – Specific requirements are contained in WAC 246-290-300. The City has been collecting a minimum of 70 samples per month from different locations throughout the system, based on estimates of the population served.

Table 8 lists the addresses and schedule of the City's routine sampling locations, including the upstream and downstream sampling locations in the event that repeat sampling is necessary. A total of 70 samples will be collected each month in accordance with the schedule shown in the table. The sampling sites are rotated throughout the system to achieve a thorough sampling of all parts of the system.

Table 8
Coliform Monitoring Sampling Locations and Schedule

Sample Site #	Address	Month	Jan / Jul				Feb / Aug				Mar / Sept				Apr / Oct				May / Nov				Jun / Dec			
		Week	1	2	3	4	1	2	3	4	1	2	3	4	1	2	3	4	1	2	3	4	1	2	3	4
W-SS-1	33rd Ave NE / Marine Dr			x		x		x		x		x		x		x		x		x		x		x		x
W-SS-2	5600 Block of Regan Rd		x	x	x	x	x	x	x	x	x	x	x	x	x	x	x	x	x	x	x	x	x	x	x	x
W-SS-3	57th St. NE / 67th Ave NE		x	x	x	x	x	x	x	x	x	x	x	x	x	x	x	x	x	x	x	x	x	x	x	x
W-SS-4	7200 Block of 83rd Ave NE			x			x			x			x			x			x			x			x	
W-SS-5	9200 Block of 51st Ave NE		x		x		x		x		x		x		x		x		x		x		x		x	
W-SS-6	9600 Block of 51st Ave NE		x	x	x	x	x	x	x	x	x	x	x	x	x	x	x	x	x	x	x	x	x	x	x	x
W-SS-8	51st Ave NE / 122nd Pl. NE			x			x			x			x			x			x			x			x	
W-SS-9	140th St NE / Smokey Pt Blvd		x	x	x	x	x	x	x	x	x	x	x	x	x	x	x	x	x	x	x	x	x	x	x	x
W-SS-10	169th St NE / Smokey Pt Blvd		x	x	x	x	x	x	x	x	x	x	x	x	x	x	x	x	x	x	x	x	x	x	x	x
W-SS-13	151st Pl NE / 45 Road		x	x	x	x	x	x	x	x	x	x	x	x	x	x	x	x	x	x	x	x	x	x	x	x
W-SS-15	91st St NE / 35th Ave NE				x			x			x			x			x			x			x			x
W-SS-16	2600 Block of 74th St NE		x	x	x	x	x	x	x	x	x	x	x	x	x	x	x	x	x	x	x	x	x	x	x	x
W-SS-17	15424 51st Ave NE		x		x		x		x		x		x		x		x		x		x		x		x	
W-SS-27	8210 100th St NE		x	x	x	x	x	x	x	x	x	x	x	x	x	x	x	x	x	x	x	x	x	x	x	x
W-SS-29	109th St / 51st Ave		x	x	x	x	x	x	x	x	x	x	x	x	x	x	x	x	x	x	x	x	x	x	x	x
W-SS-30	17702 11th Ave NW		x								x								x							
W-SS-31	Edward Springs (Lake Gdwn)						x								x								x			
W-SS-34	3815 124th St NE			x		x		x		x		x		x		x		x		x		x		x		x
W-SS-35	7207 52nd Dr NE		x	x	x	x	x	x	x	x	x	x	x	x	x	x	x	x	x	x	x	x	x	x	x	x
W-SS-36	175th Pl / Spring Lane Ave			x		x		x		x		x		x		x		x		x		x		x		x
W-SS-37	139th Pl / 54th Dr NE				x			x			x			x			x			x			x			x
W-SS-38	4529 / 130th Pl NE		x			x			x			x			x			x			x			x		
W-SS-39	3800 Block of 176th Pl NE		x		x		x		x		x		x		x		x		x		x		x		x	
W-SS-40	7915 87th Ave NE		x			x			x			x			x			x			x			x		

Table 8 (Continued)
Coliform Monitoring Sampling Locations and Schedule

Repeat Upstream Sample Site #	Address	Repeat Downstream Sample Site #	Address
W-SS-1	6223 33rd Ave NE (McDonalds)	W-SS-1	6328 33rd Ave NE (Arby's)
W-SS-2	1926 47th Ave NE Unit "A"	W-SS-2	5501 47th Ave NE
W-SS-3	5719 67th Ave NE	W-SS-3	5525 67th Ave NE
W-SS-4	8227 69th St NE	W-SS-4	8213 72nd Pl NE
W-SS-5	5500 92nd Pl NE	W-SS-5	9124 55th Ave NE
W-SS-6	9602 51st Ave NE Unit "A"	W-SS-6	9528 51st Ave NE Unit "B"
W-SS-8	12309 51st Ave NE	W-SS-8	12102 51st Ave NE
W-SS-9	14125 Smokey Pt Blvd	W-SS-9	13733 Smokey Pt Blvd
W-SS-10	17127 Smokey Pt Blvd (7-11)	W-SS-10	16820 Smokey Pt Blvd (Subway, etc.)
W-SS-13	15129 45 Road	W-SS-13	1525 151st Pl NE
W-SS-15	3507 92nd Pl NE	W-SS-15	3506 91st St NE
W-SS-16	2609 74th St NE	W-SS-16	2415 74th St NE (Quilceda Elementary)
W-SS-17	15424 51st Ave NE	W-SS-17	15308 51st Ave NE
W-SS-27	9731 83rd Ave NE	W-SS-27	9808 81st Ave NE
W-SS-29	11019 51st Ave NE	W-SS-29	5024 109th St NE #B
W-SS-30	1108 Lakewood Road	W-SS-30	17702 11th Ave NW
W-SS-31	902 176th Pl NE	W-SS-31	New Treatment Plant
W-SS-34	3815 124th St NE	W-SS-34	3805 124th St NE
W-SS-35	7100 Block of 44th St NE	W-SS-35	5129 70th Dr NE
W-SS-36	17509 Spring Lane Ave	W-SS-36	17528 Spring Lane Ave
W-SS-37	14003 54th Dr NE	W-SS-37	13830 54th Dr NE
W-SS-38	4609 130th Pl NE	W-SS-38	4520 130th Pl NE
W-SS-39	3921 Totem Park Lane	W-SS-39	3817 176th Pl NE
W-SS-40	7915 87th Ave NE	W-SS-40	7915 87th Ave NE

Coliform Bacteria Repeat Sampling – In the event that a sample tests positive for coliform, a repeat sample shall be taken at the same location as the suspect sample and two additional samples shall be taken within five service connections upstream and downstream of the suspect sample. Source of supply samples must also be collected at each source (prior to treatment) that was in operation when the positive sample was collected. These repeat and source samples shall be taken by the end of the next business day after receiving the unsatisfactory results. If the results conclude that an MCL is exceeded (i.e., coliform are present in two or more samples for the month, including repeat samples), the City shall proceed with public notification in accordance with WAC 246-290-495.

Disinfectant Residual Concentration – The City's chlorination targets are to maintain a free chlorine residual above 0.2 mg/L at the Edward Springs and Stillaguamish treatment plant entry points to distribution at all times as well as ensure distribution free chlorine residual is equal to or above 0.05 mg/L in more than 95% of monthly samples. In 2014, free chlorine ranged between 0.02 and 1.62 mg/L and averaged 0.75 mg/L throughout the distribution system.

Samples collected and submitted for coliform testing shall also be tested for disinfectant residual concentration to ensure the disinfectant residual meets the regulatory requirements and achieves the target levels planned by the City.

Lead and Copper – Specific requirements are contained in Title 40, Parts 141.86, 141.87 and 141.88 of the Code of Federal Regulations (CFR). Initial monitoring, beginning July 1, 1993,

required 20 samples for each 6-month monitoring period for the City's population. After two consecutive 6-month monitoring periods of meeting the lead and copper action levels, ten samples taken during June, July, August, or September were required once per year. After three consecutive years of monitoring and meeting the lead and copper action levels, ten samples taken during June, July, August, or September are required every 3 years. However, the City's population has increased such that the sampling requirement is now 30 samples every 3 years.

The City has collected samples as required. All lead and copper monitoring completed indicated lead and copper levels were below the action levels at the 90th percentile. Sample sites shall be selected based on the known existence of lead pipes, copper pipes and copper pipes with lead solder in accordance with 40 CFR 141.86(a). All samples, except for lead service line samples, shall be "first draw tap samples" taken at a cold water tap in which water has not been drawn from the tap for at least six hours, but no more than 12 hours. Sample faucets shall be flushed with cold water the evening prior to collecting the sample. Lead service line samples shall be collected with one of three methods in accordance with 40 CFR 141.86(b). The locations of future sample sites shall be the same as past sample sites, unless unavoidable conditions prevent sampling at the same locations. The City has reviewed it's historical records and has exposed and phsyically inspected service connections identified as being the most at risk of containing leaded service goosenecks. No records or physical inspections have indicated the presence of leaded service lines within the City's distribution system.

Fluoride Concentration – Specific requirements are contained in WAC 246-290-460 for systems that are fluoridating drinking water. The City does not currently fluoridate its water; however, the City receives fluoridated water from the City of Everett. City customers may receive water that is fluoridated, non-fluoridated or only partially fluoridated depending on water system operating conditions. It is the responsibility of Everett to monitor the fluoride concentrations it provides. The City samples for fluoride concentrations when they test for inorganic chemicals.

If the City decides to fluoridate its water supply in the future, the concentration of fluoride shall be maintained at 0.8 mg/L to match Everett. Determinations of fluoride concentrations shall be made daily, and reports of the analyses shall be submitted to DOH within 10 days of the end of the reporting month. Monthly check samples shall be taken downstream of each fluoride injection point, at the first sample tap where adequate mixing has occurred.

Disinfection By-products – Specific requirements are contained in WAC 246-290-300. Under the Stage II Disinfectants and Disinfection Byproducts Rule (DBPR), the City is required to monitor for total trihalomethanes (TTHM) and five haloacetic acids (HAA5) every three months. Based on the City's water service population, eight samples are required to be taken. The sample locations were established during the City's Stage II DBPR Initial Distribution System Evaluation and sampling is performed according to the City's Stage II DBPR monitoring plan.

APPENDIX L

Watershed Control Plan

WATERSHED CONTROL PROGRAM

INTRODUCTION

All federally defined Group A public water systems using surface water or groundwater under the direct influence of surface water (GWI) sources are required to develop and implement a watershed control program. The City of Marysville (City) is subject to the watershed control program requirements because the Edward Springs source and the Stillaguamish Ranney Well Collector are GWI sources. The following information serves as supplemental updates to the Watershed Control Programs contained in the City's 2002 and 2008 Water System Plans.

WATERSHED CONTROL ELEMENTS

The Washington State Department of Health (DOH) administers the state wellhead protection and watershed control program and the required elements are contained in Washington Administrative Code (WAC) 246-290-135. The minimum required elements of a watershed control program are as follows.

- A description of the watershed that includes its location, hydrology, and land ownership, and the identification of activities that may have a negative impact on source water quality.
- An inventory of all potential sources of surface water contamination, including the locations of owners/operators located within the watershed that have a significant potential to contaminate the source water quality.
- Watershed control measures that include documentation of ownership and relative written agreements as well as monitoring activities and water quality.
- System operation and emergency provisions.
- Documentation of water quality trends.

EXISTING WATERSHED, WATER QUALITY, AND CONTROL

WATERSHED DESCRIPTION

The Stillaguamish watershed, located in Snohomish and Skagit Counties, contains all of the Stillaguamish River basin east of the City's source as shown in **Figure 1**. It collects water from approximately 540 square miles and drains approximately 78 percent of Water Resource Inventory Area (WRIA) 5. The watershed extends east from the City's Stillaguamish Ranney Well Collector, located near the City of Arlington, to the foothills of the Cascade Mountains in the Mount Baker National Forest. The City's watershed boundaries can be delineated by the boundaries of WRIA 5, east of the Ranney Well Collector.

Figure 1
Stillaguamish Ranney Well Collector Watershed

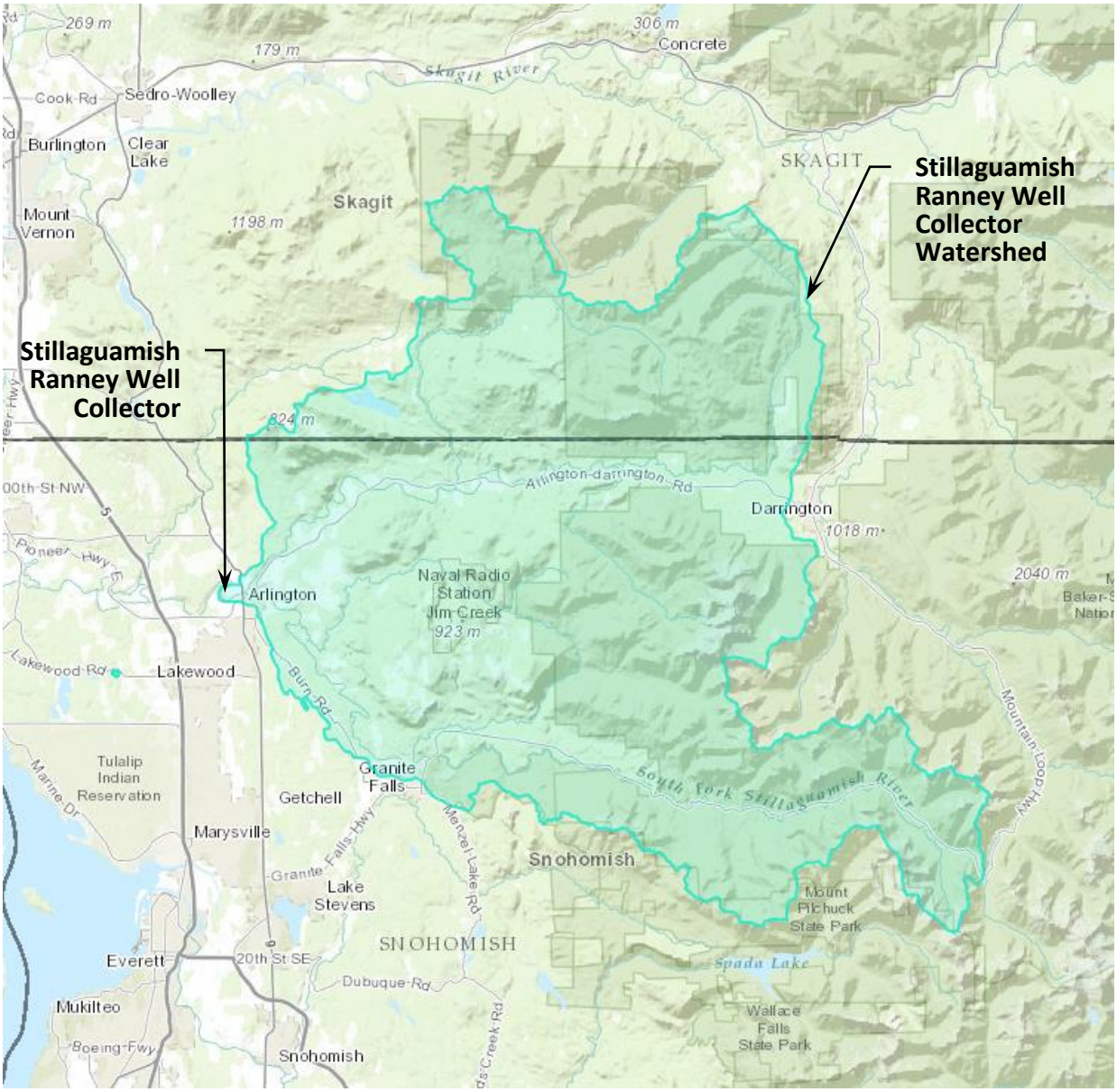

The City owns approximately 400 acres of forested land in the Edward Springs watershed as shown in **Figure 2**. The controlled access watershed is also located in WRIA 5. There are signs and some fencing prohibiting trespassing, however, the area can still be accessed and is occasionally utilized by local residents for hiking, walking and horseback riding. There are no other facilities within the City-owned parcel other than those associated with the water supply. The 2001 Predesign Report for the Edward Springs Supply states that the entire watershed and a large area surrounding it is underlain by Vashon Advance Outwash material resulting in a large aquifer system. The general potentiometric contours in the aquifer indicate that the direction of groundwater flow is generally southwest to northeast. Rural residential development exists to the south and west of the property boundary generally upgradient of the direction of groundwater flow.

WATER QUALITY TRENDS

DOE currently monitors water quality within the watershed at four permanent locations. Water quality parameters typically measured through this program include: conductivity, dissolved oxygen, pH, temperature, total suspended solids, turbidity, fecal coliform bacteria, soluble reactive phosphorus, total phosphorus, ammonia, nitrate plus nitrite, and total nitrogen. Selected sites are also sampled for dissolved and total recoverable metals each year. The DOE Stations along the Stillaguamish are:

- 05B110 – North Fork Stillaguamish near Darrington
- 05B070 – North Fork Stillaguamish at Cicero
- 05A110 – South Fork Stillaguamish near Granite Falls
- 05A090 – South Fork Stillaguamish at Arlington

Table 1 presents a comparison of water quality data collected between 1991-2001, 2002-2006, and 2007-2014 at Stations 05A090 – South Fork Stillaguamish at Arlington, and 05B070 – North Fork Stillaguamish at Cicero.

Table 1

Water Quality Data for Two Monitoring Sites Nearest City Source

Water Quality Parameter	Unit	South Fork at Arlington Station # 05A090			North Fork at Cicero Station # 05B070		
		2007-2014 Average	2002-2006 Average	1991-2001 Average	2007-2014 Average	2002-2006 Average	1991-2001 Average
Fecal Coliform	#/100 mL	33	48	57	21	18	57
Ammonia-N	mg/L	0.01	0.01	0.01	0.01	0.01	0.01
Nitrate/Nitrite-N	mg/L	0.18	0.20	0.21	0.16	0.15	0.16
Oxygen	mg/L	11.70	11.60	11.45	11.82	11.80	11.62
pH	pH unit	7.31	7.48	7.43	7.42	7.67	7.48
Suspended Solids	mg/L	61	95	90	39	69	99
Temperature	°C	8.64	10.5	9.0	8.2	9.8	8.4
Total Phosphorus	mg/L	0.05	0.07	0.05	0.04	0.06	0.06
Turbidity	NTU	34.67	60.6	45.8	23.0	40.5	39.1

The Edward Springs produces water with consistently low turbidity, however, there is concern of arsenic in this source, which is a chronic primary contaminant. Sources should be treated to ensure arsenic concentrations are below the maximum contaminant level of 10 parts per billion. The source water is currently below the 10 parts per billion (ppb) Maximum Contaminant Level (average concentration is 5-6 ppb), but could be above a future limit if the standards are changed. IOCs and physical substances were last monitored at Edward Springs in 2013. The City currently has an IOC waiver from 2011 through 2019. Volatile organic chemicals (VOCs) were last monitored at Edward Springs in 2013 and the City currently has a VOC waiver from 2014 through 2019. Nitrate monitoring is performed annually. As required by DOH, monitoring for radionuclides was completed at Edward Springs in 2010. The results of inorganic chemical (including nitrate) and VOC monitoring for the Edward Springs source indicate that all primary and secondary standards are being met.

SUSCEPTIBILITY ASSESSMENT SUMMARY

DOH has developed the Susceptibility Assessment Survey Form for water purveyors to complete to determine a drinking water source's potential for contamination. The results of the susceptibility assessment may provide monitoring waivers that allow reduced source water quality monitoring.

Based on the results of the City's susceptibility assessment, DOH assigned a susceptibility rating for each source. The three susceptibility ratings are low, moderate, and high. DOH assigned a moderate susceptibility rating to the Lake Goodwin and Edward Springs Wells, and a low susceptibility rating to the Highway 9 and Sunnyside Wells. The Stillaguamish Ranney Well Collector and Edward Springs are assigned a high susceptibility rating.

LAND USE

The Stillaguamish Ranney Well Collector's watershed is large and much of the area is privately owned. The City does not have fee title to any land within the Stillaguamish Watershed other than the actual points of diversion at the source intake pumps. As such, the City has little to no control over land use activities in the large Stillaguamish watershed. It would not be possible for the City to reach agreements with each party owning land within the watershed or to develop a comprehensive watershed control plan for the entire watershed. This Watershed Control Plan focuses on land ownership and land use activities nearest to the Stillaguamish Ranney Well Collector.

Land use in the Stillaguamish Ranney Well Collector's watershed is varied and includes urban areas, rural residential, agriculture and undeveloped forest. The City of Arlington's Urban Growth Area (UGA) is located in close proximity to the Stillaguamish Ranney Well Collector and has the potential to adversely impact the Stillaguamish source water quality.

The area around Edward Springs is zoned Rural Residential (RR/5 BASIC). Potential non-point sources of pollution in this area include on-site septic systems, small animal feeding operations, pesticide and fertilizer application, release/improper disposal of household products, illegal dumping, accidental spills along State Highway 531, and abandoned wells.

INVENTORY OF POTENTIAL CONTAMINATION SOURCES

An essential element of watershed control is an inventory of potential sources of contamination. The inventory should include the locations of owners and operators located within the watershed that have a significant potential to impact the source watery quality.

INVENTORY APPROACH

The inventory of potential sources of groundwater contamination was conducted during the preparation of the City's Water System Plan. Several databases maintained by DOH, the Washington State Department of Ecology (Ecology) and the US EPA were searched for known and potential contaminant sources. Because the watershed shown in **Figure 1** is so large, the inventory focused on potential contaminant sources within two miles of the Stillaguamish Ranney Well Collector. The inventory for the Edward Springs focused on the area within the Time of Travel and Buffer zones for the springs, as identified in the City's 2002 Wellhead Protection Program. A figure presenting these areas is reproduced as **Figure 3**.

INVENTORY FINDINGS

The inventory efforts revealed several potential point sources of contamination located within the Stillaguamish Ranney Well Collector watershed. The list of potential sources of contamination within 2 miles of the Stillaguamish Ranney Well Collector is shown in **Table 2**.

Table 2
Potential Point Sources of Contamination within 2-miles of the Stillaguamish Ranney Well Collector

Name	Address	Material Stored/Status
Smokey Point Concrete	23315 Dike Rd	Leaking Underground Storage Tank, Underground Storage Tank and Toxics
CPC Materials	22315 Dike Rd	Hazardous Waste Planner and Toxics Release Inventory
Cemex Agg Portable 1881	23605 SR 9	Water Quality (Sand and Gravel Mining), Hazardous Waste Site
Cemex BNI Pit	7416 Lake Armstron Rd	Water Quality (Sand and Gravel Mining)
Van Slageren Dairy	23230 SR 9 NE	Water Quality (Dairy)
City of Arlington	108 W Haller Ave	Water Quality (Water Treatment Plant) and Hazardous Waste Generator
7 Eleven	541 N West Ave	Leaking Underground Storage Tank, Underground Storage Tank and Hazardous Waste Site
Frontier Bank	525 N Olympic	Leaking Underground Storage Tank and Underground Storage Tank
Jazor Enterprises	500 N West Ave	Hazardous Waste Site
Verizon Northwest, Inc. Arlington Co	5th and McLeod	Hazardous Waste Site and Underground Storage Tank
City of Arlington	5th St and N Olympic Ave, 437 N Olympic Ave	Leaking Underground Storage Tank and Underground Storage Tank
Arlington School District - Gifford	410 Gifford	Leaking Underground Storage Tank and Underground Storage Tank
Country Charm Dairy	604 E Gilman Ave	Water Quality (Dairy)
Waste Management 3rd & Washington	3rd And Washington	Spills

Within 5 miles of the Stillaguamish Ranney Well Collector and within the watershed, there are 13 additional potential sources of point contamination. These sources include dairies, toxic cleanup sites, and the Evancha Dam. The City of Arlington's Wastewater Treatment Plant is also located upstream of the Stillaguamish Ranney Well Collector. The presence of this sewer outfall creates the potential for contamination due to fecal coliform, elevated temperatures, and residual chlorine.

Only one active potential point source of contamination is documented in the Edward Springs Buffer Zone. This hazardous waste site is the Verizon Wireless WASE Lakewood site located at 16720 McRae Road NW.

Other Potential Sources of Contamination

Other potential sources of contamination include the following.

Septic Systems – Septic systems for wastewater disposal and treatment may be found in areas that are not served by sewage collection system. The ability to remove pollutants from the discharge of these systems depends on the type of the surrounding soil. In addition, septic systems may be unlawfully used for disposal of toxic materials.

Home Oil Furnace Tanks – Some residents may be using oil furnaces to heat their homes. The fuel for oil furnaces can be stored in above-grade or buried tanks.

Hazardous Household Materials – Almost all households have hazardous materials that are commonly used for a variety of cleaning and maintenance purposes, including cleaning solvents, paint, antifreeze, and engine oil.

Private Wells – Improperly abandoned wells may pose a threat to the watersheds. Wells with insufficient seals can provide a pathway for contaminants to enter the aquifer.

Stormwater – Stormwater runoff can potentially contaminate the Town's sources if it is not properly treated. Runoff from industrial and commercial areas can contain high levels of metals and hydrocarbons. Runoff from residential areas is typically high in nutrients, pesticides, and metals.

Creeks – Creeks located within the watershed can carry contaminants that may pose a threat to the watersheds.

Agricultural Practices – Agricultural activities within the watershed can be a threat to the sources.

NOTIFICATION OF INVENTORY FINDINGS

The owners and operators of known and potential sources of groundwater contamination identified in the inventory will be notified of their location within the watershed. An example of the notification letters that will be sent is included in the City's Wellhead Protection Program. All existing customers were notified of the watershed control program and the importance of protecting the City's sources in the 2015 Consumer Confidence Report included in **Appendix N** of the WSP.

WATERSHED CONTROL MEASURES

EXISTING MEASURES

The City's existing efforts toward protecting its water resources include the following.

- Restricting access to the Edward Springs watershed and constructing fencing in portions of the watershed.
- Posting signage indicating the presence of a public water source.
- Conducting daily inspection of all sources of supply.
- Being observant of potential harmful activities that can eventually affect the sources of supply.
- Monitoring source water quality as described in **Chapter 6** of the WSP.

- Public outreach and education that includes a brochure that describes watershed control activities. This brochure is available to customers at the City offices.
- Development of a contingency plan in 2002 to cover water supply disruptions during emergencies.
- Construction of source treatment facilities for the Edward Springs and Stillaguamish Ranney Well Collector. Since the City cannot control watershed activities or high turbidity levels that occasionally occur in the Stillaguamish River, the water treatment facilities assist the City in controlling the quality of the City's drinking water supply.

POTENTIAL FUTURE MEASURES

In addition to the existing watershed control measures currently in place, the City is considering the following additional measures to enhance the existing measures.

- Continue constructing fencing in the Edward Springs watershed and maintaining the collector piping.
- Continued protection of the Edward Springs watershed. Ensure that any improvements on the site do not pose a water quality threat to the springs and that best management practices are utilized during and after any construction.
- Continue to monitor the NPDES permit for the City of Arlington's Wastewater Treatment Plant that is located upstream of the Stillaguamish Ranney Well Collector. Track the renewal of the permit to note any modifications to effluent limitations or other requirements which may pose an adverse impact to the water quality of the source.
- Encourage Low Impact Development (LID) in the watersheds. LID is a method of stormwater management that reduces impervious surface area, promotes infiltration, and utilizes best management practices to capture and treat stormwater runoff locally. LID benefits the water resources by more closely simulating predevelopment hydrologic characteristics. LID Best Management Practices may include minimizing impervious surface, retaining native vegetation, roof downspout controls and infiltration, rainfall reuse, and alternative paving surfaces.
- Contact owners and operators of potential sources of contamination in the watershed.

EMERGENCY PROVISIONS

The City developed a Water System Emergency Response Plan (ERP) in December 2004, and a Contingency Plan for Water Supply Disruptions During Emergencies (Contingency Plan) in 2002.

The Contingency Plan identifies the following hazards as potentially applicable to the Stillaguamish Ranney Collector and Edward Springs:

- Earthquake
- Volcanic Eruptions
- Floods
- Wind, Snow, and Storms
- Waterborne Disease
- Hazardous Material

- Vandal, Riots, Strikes
- Terrorism
- Nuclear Accidents

The Contingency Plan also identifies facility mitigation, protection and backup plans to respond to various emergency conditions.

The potential impact of contamination or other water supply disruption at the Stillaguamish Ranney Collector or Edward Springs is low to moderate since the City has several other sources that can supply the distribution system. If a water supply disruption were to occur at one of these sources, the source would be shut down and DOH would be notified as necessary. Customers would also be notified to instruct them to boil all water to be used for consumption and cooking, if boiling is effective for type of condition that required the shutdown of the source. The water quality within the reservoirs would also be analyzed and disposed of properly if contaminated. Disinfection of the reservoirs and water mains would follow, as necessary, to remove contaminated residuals. Other system facilities would be adjusted and water use reduction measures would be implemented as necessary to ensure an adequate supply of water.

Figure 2
Edward Springs
Watershed Area

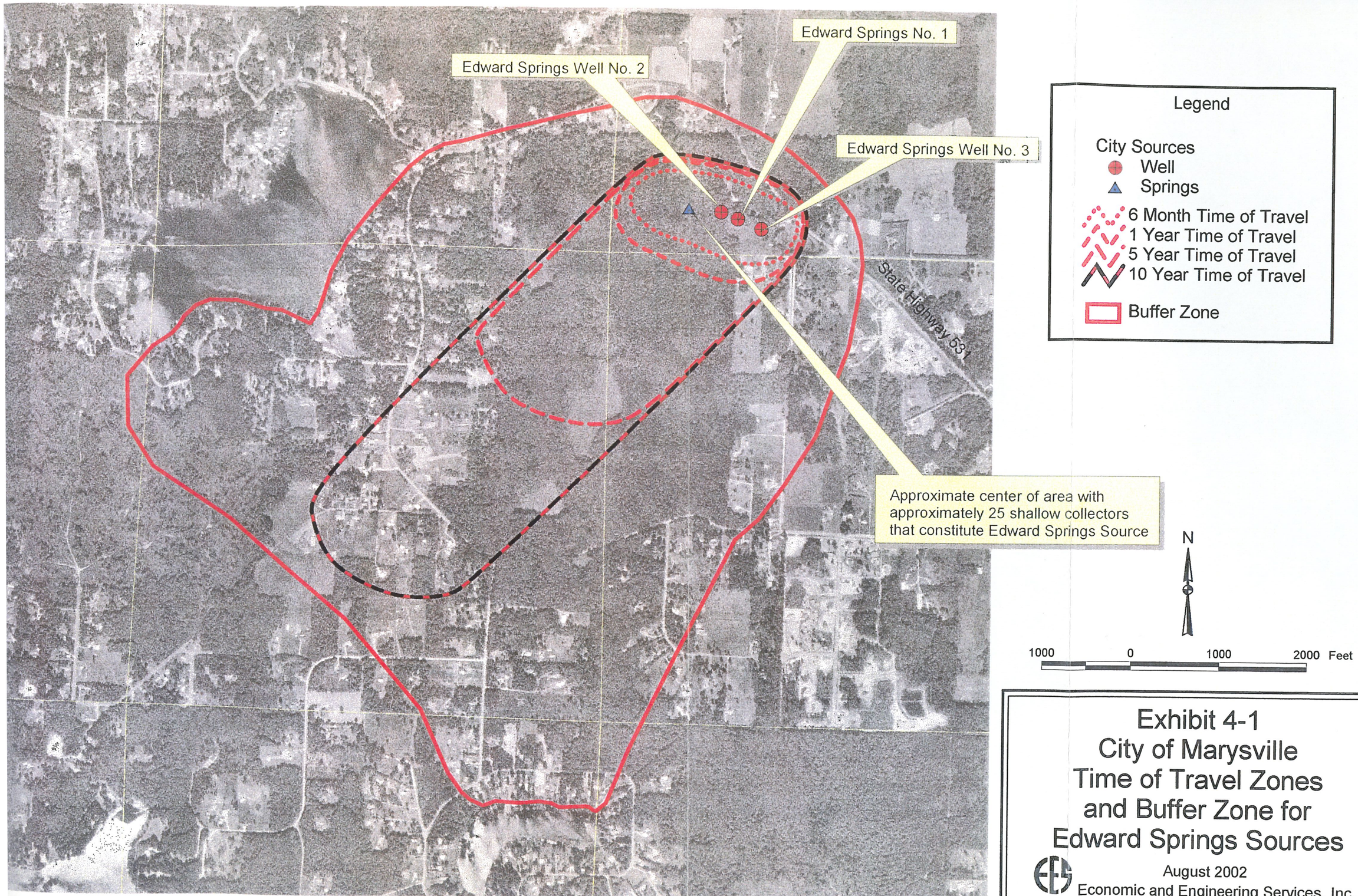

Exhibit 4-1
City of Marysville Time of Travel Zones and Buffer Zone for Edward Springs Sources

August 2002

Economic and Engineering Services, Inc.

<EES_OLY>G:\MARYSVILLE\GIS\MARYSVILLE WHP.APR<Time of Travel (Edward Springs)>

APPENDIX M

Wellhead Protection Program

WELLHEAD PROTECTION PROGRAM

INTRODUCTION

A wellhead protection program is a proactive and ongoing effort of a water purveyor to protect the health of its customers by preventing contamination of the groundwater it supplies for drinking water. Section 1428 of the 1986 Amendments to the Federal Safe Drinking Water Act (SDWA) mandates that each state develop a wellhead protection program. In Washington State, the Department of Health (DOH) is the lead agency for the development and administration of the State's wellhead protection program. All federally defined Group A public water systems that use groundwater as their source are required to implement a wellhead protection program. All required elements of a local wellhead protection program must be documented and included in either the Water System Plan (applicable to the City of Marysville) or Small Water System Management Program document (not applicable). The State mandate for wellhead protection and the required elements of a wellhead protection program are contained in Washington Administrative Code (WAC) 246-290-135, Source Protection. The minimum required elements of a wellhead protection program for water systems in Washington State that rely on groundwater are as follows.

- A completed susceptibility assessment of each water source.
- Delineation of wellhead protection areas for each water source with the six-month, one, five, and ten-year time of travel boundaries marked using DOH or Environmental Protection Agency (EPA) guidance for delineation.
- An inventory of known and potential contaminant sources located within the defined wellhead protection areas. This inventory list shall be updated every two years.
- Documentation of the purveyor's notification to all owners/operators of known and potential sources of groundwater contamination within the defined wellhead protection areas.
- Documentation of the purveyor's notification to regulatory agencies and local governments of the defined boundaries of the wellhead protection areas and the findings of the contaminant source inventory.
- A contingency plan to ensure that customers have an adequate supply of water in the event that contamination causes a temporary or permanent loss of the system's principal source of supply.
- Documentation of the purveyor's coordination with local emergency spill responders (including police, fire, and health departments), including notification of wellhead protection area boundaries, and results of the susceptibility assessment, inventory findings, and contingency plan.

RECENT PROGRAM ACTIVITIES

The City of Marysville (City) has established an active wellhead protection program to protect the health of its customers by preventing contamination of the groundwater. Many of the City's Wellhead Protection Program activities are focused on protecting the Edward Springs spring source and wells, because source water protection is an important element of meeting criteria for having an

unfiltered groundwater under the influence source (Edward Springs). Recently the City has actively participated in the following wellhead protection activities.

SIGNAGE

The City has posted signage inside the watershed and at boundaries to deter trespassing and contamination of the watershed. These signs include "No Trespassing," "No Dumping," and "Edward Springs Watershed Protected Drinking Water Source."

WATERSHED MANAGER

The City has designated a staff member to be Watershed Manager. This person has the responsibilities of implementing and enforcing the watershed control and wellhead protection programs, assigning individuals to make daily and weekly inspections, reviewing site logs, and responding to phone calls regarding watershed activity.

INSPECTIONS AND PATROLS

The City has implemented both daily and weekly inspections of the watershed. Each day, a staff member inspects the Edward Springs screenhouse and immediate area, collector roads, and Edward Springs. Weekly inspections include patrols along a foot trail and abandoned road in the vicinity.

SECURITY

The City has established security monitoring protocols to limit access to the watershed. Additionally, the City provides the police with a copy of the annual source water protection report. The police regularly monitor watershed property. The City has installed security chain link fencing with barbed wire along Lakewood Road and the east property line to further limit access to the watershed perimeter.

WATER QUALITY MONITORING

The City performs source water quality monitoring of multiple parameters, as required by Safe Drinking Water Act requirements, as described in **Chapter 6**.

EDUCATION

The Watershed Manager has educated City staff regarding watershed sensitivity. In turn, City personnel have also worked to educate adjacent property owners regarding watershed protection.

SUSCEPTIBILITY ASSESSMENT

DOH has developed the Susceptibility Assessment Survey Form for water purveyors to complete to determine a drinking water source's potential for contamination. The results of the susceptibility assessment may provide monitoring waivers that allow reduced source water quality monitoring.

Based on the results of the City's susceptibility assessment, DOH assigned a susceptibility rating for each source. The three susceptibility ratings are low, moderate, and high. DOH assigned a moderate susceptibility rating to the Lake Goodwin and Edward Springs Wells, and a low susceptibility rating

to the Highway 9 and Sunnyside Wells. The Stillaguamish Ranney Well Collector and Edward Springs are assigned a high susceptibility rating.

DELINEATION OF WELLHEAD PROTECTION AREAS

A wellhead protection area is the surface and subsurface area surrounding a well, well field, or spring through which contaminants are likely to pass and eventually be transported into the drinking water system. This is the area around the source that must be managed to protect the water supply from contamination. Establishing or delineating the boundaries of the wellhead protection area for each source is most commonly accomplished using the estimated time of travel rates of groundwater.

WELLHEAD PROTECTION AREA ZONES

The first component of a wellhead protection area is the sanitary control area required by WAC 246-290-135. This protective area should already be tightly controlled by the purveyor to minimize direct contamination at the wellhead. The minimum sanitary control area for a well shall be a radius of 100 feet around the wellhead and 200 feet around springs. The construction, storage, disposal or application of known or potential contaminants is prohibited within this area, unless permitted by DOH and the water purveyor.

Wellhead protection areas are based on six-month, one-year, five-year, and ten-year time of travel zones. For example, a one-year time of travel zone represents an area around the well or well field in which contaminants could reach the well within one year. Each zone has different management strategies based on the urgency of response and characteristics of risks to public health posed by contaminants within the zones. An additional zone, called the buffer zone, may also be established to provide an area of added protection outside the ten-year time of travel zone for the wellhead protection area.

DELINEATION METHODS

The Calculated Fixed Radius (CFR) delineation method was used to define the wellhead protection areas for the Edward Springs, Lake Goodwin, Highway 9 and Sunnyside Wells. Data input includes the annual volume pumped by the well, the open interval or length of the well screen, aquifer porosity, and the desired travel time (typically six-month, one-year, five-year, and ten-year). For the purposes of the CFR delineation, the annual volume pumped by the well was calculated based on an assumed continuous flow rate of 1,000 gpm for the Sunnyside and Highway 9 Wells. The annual volume pumped by the remaining wells was based on the installed pump capacity. The Time of Travel (TOT) data calculated from the CFR method is used to create circular boundaries around each of the wells or well fields representing the hypothetical distance that a contaminant will travel for the given length of time. The wellhead protection area boundaries, based on time of travel calculations for each of the City's sources, are shown in **Figure 1**.

INVENTORY OF POTENTIAL CONTAMINANT SOURCES

An essential element of wellhead protection is an inventory of all potential sources of groundwater contamination throughout delineated wellhead protection areas. The purpose of the inventory is to identify past, present, and proposed activities that may pose a threat to the source of water supply (i.e. the aquifer).

The inventory of potential sources of groundwater contamination was conducted during the preparation of the City's Water System Plan. Several databases maintained by DOH, the Washington State Department of Ecology (Ecology) and the US EPA were searched for known and potential contaminant sources.

INVENTORY FINDINGS

The inventory efforts revealed several potential point sources of contamination located within the City's wellhead protection areas. The list of potential sources of contamination is shown in **Table 1**. Potential non-point sources of contamination are discussed in the following section.

Table 1
Potential Point Sources of Contamination

Name	Address	Material Stored/Status	WHPA Location
Verizon Wireless WASE Lakewood	16720 McRae Rd NW	Hazardous Waste Site	Edward Springs Wells 10-year TOT
Snohomish County PUD East Marysville Substation	6309, 6227 & 6315 83rd Ave NE	Hazardous Waste Site, Toxics	Hwy 9 Well 5-year TOT
Walmart	8713 64th St NE	Hazardous Waste Generator and Planner	Hwy 9 Well 6-month TOT
Snohomish County PUD Lake Goodwin Substation	5120 Lakewood Rd	Hazardous Waste Site	Lake Goodwin Well 10-year TOT
Lake Goodwin Grocery	4726 Lakewood Rd	Leaking Underground Storage Tank (currently being remediated)	Lake Goodwin Well 5-year TOT
Transportation Coop	8820 42nd St NE	Leaking Underground Storage Tank and Underground Storage Tank	Sunnyside Wells 10-year TOT
Stan's Radiator	9014 42nd St NE	State Clean-up Site	Sunnyside Wells 10-year TOT
Jiffy Lube	6209 Everett-Arlington Rd	Hazardous Waste Site	Sunnyside Wells 10-year TOT
Mandrakes Antiques Refinishing Plant	4223 79th Ave NE	Hazardous Waste Site	Sunnyside Wells 1-year TOT
Boulevard Grocery	5304 61st St NE	Underground Storage Tank	Sunnyside Wells 5-year TOT
Aaron's Auto	7625 44th Ave NE	Hazardous Waste Management Activity and Generator	Sunnyside Wells 6-month TOT

Edward Springs Wells – The area around Edward Springs is zoned Rural Residential (RR/5 BASIC). Potential non-point sources of pollution in this area include on-site septic systems, small animal feeding operations, pesticide and fertilizer application, release/improper disposal of household products, illegal dumping, accidental spills along State Highway 531, and abandoned wells.

Lake Goodwin Well – The area around the Lake Goodwin Well is zoned Rural Residential (RR/5 and RR/5BASIC). Potential non-point sources of pollution in this area include on-site septic systems, pesticide and fertilizer application, release/improper disposal of household products, accidental spills along State Highway 531, and abandoned wells.

Sunnyside Wells – The area around the Sunnyside Wells is zoned R6.5 Single Family High (R6.5 SFH). Potential non-point sources of pollution in this area include on-site septic systems, pesticide and fertilizer application, release/improper disposal of household products, urban stormwater runoff, and abandoned wells.

Highway 9 Well – The area around the Highway 9 Well is zoned Community Business, R18 Multi-Family Medium, R6.5 Single Family High, and Rural Residential (CB, R18 MFM, R6.5 SFH, RR/5, and RR/5BASIC). Potential non-point sources of pollution in this area include on-site septic systems, pesticide and fertilizer application, release/improper disposal of household products, accidental spills along State Highway 9 and State Highway 528, and abandoned wells.

Inventory Update Requirements

In accordance with WAC 246-290-135, the inventory list of actual and potential groundwater contaminant sources located within the delineated wellhead protection areas must be updated every two years. Inventory updates should be scheduled such that updates are also accomplished at the same time as the reevaluation of the wellhead protection area boundaries, which is required during each Water System Plan update.

NOTIFICATION OF INVENTORY FINDINGS

Owners and operators of known and potential sources of groundwater contamination will be notified of their location within the delineated wellhead protection areas. Regulatory agencies, local governments, and emergency response agencies will also be notified of the location of the wellhead protection areas, contaminant source inventory findings, contingency plans, and emergency response procedures. **Table 1** and **2** list the notification recipients. An example of each of the three types of notification letters that will be sent is attached. All existing customers were notified of the wellhead protection program and the importance of protecting the City's sources in the 2015 Consumer Confidence Report included in **Appendix N** of the WSP.

Table 2
Notification Recipients

ID	Contact Person	Mailing Address	City, State Zip
Regulatory Agencies and Local Governments			
WA State Dept. of Health, Office of Drinking Water	Northwest Regional Manager	20435 72nd Ave S, Suite 200	Kent, WA 98032-2358
WA State Dept. of Ecology, Northwest Regional Office	Director	3190 160th Ave. SE	Bellevue, WA 98008
Snohomish County Health District	Health Officer	3020 Rucker Ave.	Everett, WA 98201
Marysville Planning Department	Director	80 Columbia Ave	Marysville, WA 98270
Snohomish County Planning Department	Director	3000 Rockefeller, M/S 604	Everett, WA 98201
WA State Department of Transportation	Northwest Regional Director	15700 Dayton Ave. N	Seattle, WA 98133
Emergency Response Agencies			
Marysville Fire District	Fire Chief	1094 Cedar Ave	Marysville, WA 98270
Marysville Police Department	Police Chief	1635 Grove St	Marysville, WA 98270
Snohomish County Sheriff	Sheriff	3000 Rockefeller, M/S 606	Everett, WA 98201
WA State Patrol	District 7 Captain	2700 116th St. NE	Marysville, WA 98271
City of Marysville Water Customers			
All Water Customers	Varies	Varies	Marysville, WA

CONTINGENCY PLANNING

The City has developed a comprehensive Contingency Plan for Water Supply Disruptions During Emergencies (Contingency Plan). A full copy of the Contingency Plan is included as **Appendix D**. The Contingency Plan, developed in 2002, supplements the City's Emergency Response Plan, which covers all City services.

In brief, the Contingency Plan addresses the following topics:

- Hazard analysis, covering both natural and human-caused hazards;
- Vulnerability Assessment, addressing the vulnerability of key water system components to the hazards identified;
- Mitigation plan, addressing facility protection and backup systems;
- Preparedness planning, including linkage to the City's Emergency Response Plan; and
- Training of City personnel to respond to emergencies affecting the water system.

The City benefits from the fact that there are several independent sources of supply in different locations. These include surface water, ground water, and purchased water from the City of Everett.

Furthermore, the City has backup wells and interties with adjacent systems that can provide water under emergency conditions. These multiple sources offer considerable flexibility and will allow uninterrupted deliveries during most emergency situations. The City also has a Mutual Aid Agreement with neighboring jurisdictions that addresses sharing of personnel and equipment during water and/or wastewater system emergencies.

The City has also developed a separate plan for responding to droughts. Marysville's City Council adopted the *Drought Response Plan* in 2001. This plan was developed to conserve available water supply and to protect the integrity of the City's water system and minimize the adverse impacts of water supply shortage conditions. The Drought Response Plan, which has been included as **Appendix S**, includes the following elements:

- Description of possible water supply shortage scenarios,
- Data needed to identify and manage a drought situation,
- Coordination with other purveyors that may be affected, and
- Establishment of four states of response to water supply shortage conditions, according to severity of the drought.

For each water shortage response stage, the City has clearly defined communications protocols, internal operating adjustments, and supply and demand management strategies to be carried out as a response.

In addition to these planning efforts, the City monitors water levels at each well quarterly to determine the potential for a supply shortage and to check for long-term trends in water levels.

EMERGENCY SPILL RESPONSE PLANNING

The City developed a Water System Emergency Response Plan (ERP) in December 2004. This ERP documents responses to water system emergency scenarios, including specific situations such as microbial contamination, chemical contamination, and hazardous materials spills. For each scenario, the City has established immediate actions, notifications, and follow-up actions. The ERP also specifically describes coordination with other emergency responders. In addition to scenario-specific actions, the City's ERP establishes:

- Chain of command,
- Emergency notification,
- Communication protocols,
- Alternative water sources,
- Procedures for return to normal operations,
- Training and rehearsals, and
- Improvement projects related to emergency response.

The City has notified emergency responders of wellhead protection areas, contaminant inventory findings, susceptibility assessments of sources, and the contingency plan.

PROGRAM IMPLEMENTATION AND RECOMMENDATIONS

The City's Wellhead Protection Program is an on-going effort that requires staffing and resources to ensure its effectiveness in protecting the source of drinking water that is supplied to the City's customers. As discussed previously in this document, the regulations require that the City perform an inventory of all potential sources of groundwater contamination throughout the delineated wellhead protection areas every two years. In addition, DOH recommends that water systems upgrade their initial delineation using a more sophisticated groundwater flow model approach within five years of the initial delineation. At a minimum, the City must reevaluate the wellhead protection area boundaries during the Water System Plan update process.

The following tasks will be pursued as part of the City's on-going Wellhead Protection Program.

- Perform a more accurate delineation of the wellhead protection area boundaries utilizing a combined analytical and hydrogeological approach.
- Update the detailed inventory of potential sources of groundwater contamination every two years.
- Confirm location, condition, and proper closure of abandoned private wells, especially those within one-year time of travel zones.
- Distribute the required notifications as a result of updated delineations and inventory findings. Letters should be sent to local responders, regulatory agencies, and owners/operators of known and potential sources of groundwater contamination within the defined wellhead protection areas.
- Establish a Wellhead Protection Committee to promote public education and awareness of the City's groundwater sources and contaminant prevention. Coordinate these efforts with the regional agencies.
- Restrict land uses in the one-year time of travel zones that pose a high risk to groundwater, such as gas stations, oil recycling, dry cleaners, fuel storage facilities, high-density animal keeping, high-density septic systems, and golf courses. Update the City's wellhead protection ordinance as necessary. Coordinate these efforts with Snohomish County.
- Develop signage at the perimeter of and at strategic locations around the wellhead protection areas to inform people that they are entering an area that contains the City's drinking water source and is vulnerable to surface activities.

DATE

NAME (Business Owner)
ADDRESS
CITY, STATE ZIP

Subject: City of Marysville Wellhead Protection Program

Dear NAME (Business Owner):

This letter is being sent to notify you of the City of Marysville Wellhead Protection Program and your location within the wellhead protection area, as required by the Washington State Department of Health (DOH). The City of Marysville, being an owner of a Group A public water system, is required by the federal Safe Drinking Water Act to maintain a Wellhead Protection Program. The goal of a Wellhead Protection Program is to protect the health of its water customers by preventing contamination of the groundwater that it supplies for drinking water.

The City's active water sources provide drinking water to more than 66,000 people within the existing water service area. Water in the City's system is supplied by both Marysville-owned sources and from the City of Everett. Marysville-owned sources include the Lake Goodwin Well, Edward Springs and Wells, the Stillaguamish River Ranney Well Collector, Sunnyside Wells No. 1R and 2, and the Highway 9 Well.

The City's Wellhead Protection Program delineates wellhead protection areas for each well. A wellhead protection area is the surface and subsurface area surrounding a well, well field, or spring through which contaminants are likely to pass and eventually be transported into the drinking water system. This is the area around the source that must be managed to protect the water supply from contamination. The wellhead protection areas are subdivided into 6-month 1-year, 5-year, and 10-year time of travel zones. The time of travel refers to the estimated amount of time it will take for water (and contaminants) in that zone to reach the supply source. For example, a 1-year time of travel zone represents an area around the well or well field in which contaminants could reach the well within one year. The delineation of time of travel zones is important because the City then knows how much time it could take a contaminant in a certain area to reach the drinking water supply source.

The results of the wellhead protection area delineations are shown in the attached **Figure 1**. Please note that the wellhead protection area boundaries shown in the figure are subject to change in the future based on further hydrogeologic study. Upon delineation of the wellhead protection areas, an update to the inventory of known and potential contaminant sources located within the defined wellhead protection areas was accomplished. The inventory efforts revealed several potential sources of contamination located within the wellhead protection areas.

The activities at your business have the potential to affect the water quality of the City's drinking water source because of your location within the City's wellhead protection area. The inventory findings have

been provided to local regulatory agencies and emergency response agencies to make them aware of your business's location within the City's wellhead protection area, as required by DOH.

The purpose of this letter is to inform you of the City's Wellhead Protection Program and your location within the wellhead protection areas. No action is required by you at this time. We hope that your increased awareness of the City's wellhead protection area will make you especially cautious in regard to protecting the drinking water of the City's customers.

If you have any questions or concerns regarding the City's Wellhead Protection Program, please contact me at (360) 363-8001.

Sincerely,

City of Marysville

Attachment: Figure 1 – Wellhead Protection Areas

DATE

NAME (Emergency Response Agency)
ADDRESS
CITY, STATE ZIP

Subject: City of Marysville Wellhead Protection Program

Dear NAME (Emergency Response Agency):

This letter is being sent to notify you (an agency that would respond in the event of a spill or contamination of the City's water supply) of the City of Marysville Wellhead Protection Program, as required by the Washington State Department of Health (DOH). The City of Marysville, being an owner of a Group A public water system, is required by the federal Safe Drinking Water Act to maintain a Wellhead Protection Program. The goal of a Wellhead Protection Program is to protect the health of its water customers by preventing contamination of the groundwater that it supplies for drinking water.

The City's active water sources provide drinking water to more than 66,000 people within the existing water service area. Water in the City's system is supplied by both Marysville-owned sources and from the City of Everett. Marysville-owned sources include the Lake Goodwin Well, Edward Springs and Wells, the Stillaguamish River Ranney Well Collector, Sunnyside Wells No. 1R and 2, and the Highway 9 Well.

The City's Wellhead Protection Program delineates wellhead protection areas for each well. A wellhead protection area is the surface and subsurface area surrounding a well, well field, or spring through which contaminants are likely to pass and eventually be transported into the drinking water system. This is the area around the source that must be managed to protect the water supply from contamination. The wellhead protection areas are subdivided into 6-month 1-year, 5-year, and 10-year time of travel zones. The time of travel refers to the estimated amount of time it will take for water (and contaminants) in that zone to reach the supply source. For example, a 1-year time of travel zone represents an area around the well or well field in which contaminants could reach the well within one year. The delineation of time of travel zones is important because the City then knows how much time it could take a contaminant in a certain area to reach the drinking water supply source.

The results of the wellhead protection area delineations are shown in the attached **Figure 1**. Please note that the wellhead protection area boundaries shown in the figure are subject to change in the future based on further hydrogeologic study. Upon delineation of the wellhead protection areas, an update to the inventory of known and potential contaminant sources located within the defined wellhead protection areas was accomplished. The inventory efforts revealed several potential sources of contamination located within the wellhead protection areas.

An Emergency Response Plan has been developed for the City's water system. The Emergency Response Plan includes a contingency operation plan for the sources and other water system facilities. In summary, the contingency operation plan for the sources in the event of contamination of the water

source is to shut down the affected source(s), notify regulatory agencies and customers, and adjust control of other facilities to minimize supply interruption, as required.

If you have any questions or concerns regarding the City's Wellhead Protection Program, please contact me at (360) 363-8001.

Sincerely,

City of Marysville

Attachment: Figure 1 – Wellhead Protection Areas

DATE

NAME (Regulatory Agency)
ADDRESS
CITY, STATE ZIP

Subject: City of Marysville Wellhead Protection Program

Dear NAME (Regulatory Agency):

This letter is being sent to notify you (an agency that would respond in the event of a spill or contamination of the City's water supply) of the City of Marysville Wellhead Protection Program, as required by the Washington State Department of Health (DOH). The City of Marysville, being an owner of a Group A public water system, is required by the federal Safe Drinking Water Act to maintain a Wellhead Protection Program. The goal of a Wellhead Protection Program is to protect the health of its water customers by preventing contamination of the groundwater that it supplies for drinking water.

The City's active water sources provide drinking water to more than 66,000 people within the existing water service area. Water in the City's system is supplied by both Marysville-owned sources and from the City of Everett. Marysville-owned sources include the Lake Goodwin Well, Edward Springs and Wells, the Stillaguamish River Ranney Well Collector, Sunnyside Wells No. 1R and 2, and the Highway 9 Well.

The City's Wellhead Protection Program delineates wellhead protection areas for each well. A wellhead protection area is the surface and subsurface area surrounding a well, well field, or spring through which contaminants are likely to pass and eventually be transported into the drinking water system. This is the area around the source that must be managed to protect the water supply from contamination. The wellhead protection areas are subdivided into 6-month 1-year, 5-year, and 10-year time of travel zones. The time of travel refers to the estimated amount of time it will take for water (and contaminants) in that zone to reach the supply source. For example, a 1-year time of travel zone represents an area around the well or well field in which contaminants could reach the well within one year. The delineation of time of travel zones is important because the City then knows how much time it could take a contaminant in a certain area to reach the drinking water supply source.

The results of the wellhead protection area delineations are shown in the attached **Figure 1**. Please note that the wellhead protection area boundaries shown in the figure are subject to change in the future based on further hydrogeologic study. Upon delineation of the wellhead protection areas, an update to the inventory of known and potential contaminant sources located within the defined wellhead protection areas was accomplished. The inventory efforts revealed several potential sources of contamination located within the wellhead protection areas.

An Emergency Response Plan has been developed for the City's water system. The Emergency Response Plan includes a contingency operation plan for the sources and other water system facilities. In summary, the contingency operation plan for the sources in the event of contamination of the water

source is to shut down the affected source(s), notify regulatory agencies and customers, and adjust control of other facilities to minimize supply interruption, as required.

If you have any questions or concerns regarding the City's Wellhead Protection Program, please contact me at (360) 363-8001.

Sincerely,

City of Marysville

Attachment: Figure 1 – Wellhead Protection Areas

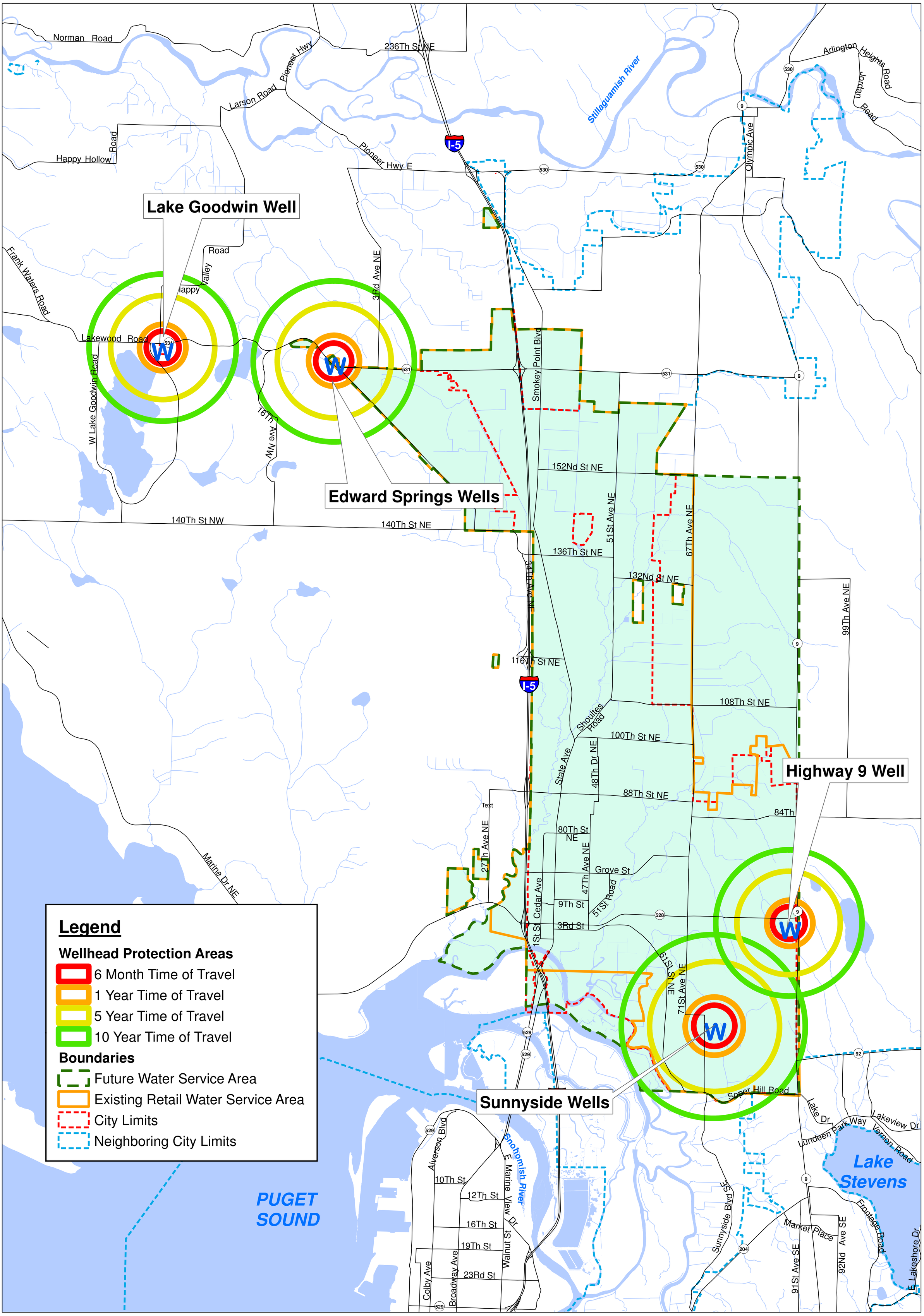

J:\Data\MAR\114-084\GIS\Maps\Figure 1 WHPA.mxd By:mcampbell Plot Date: 10/18/2016 Coordinate System: NAD 1983 StatePlane Washington North FIPS 4601 Feet

NORTH

RH2 ENGINEERS PLANNERS SCIENTISTS

1 inch = 3,000 feet

0 1,500 3,000 6,000 Feet

DRAWING IS FULL SCALE WHEN BAR MEASURES 2"

CITY OF Marysville WASHINGTON

Figure 1
Wellhead Protection Areas
City of Marysville
2016 Water System Plan

Vicinity Map

This map is a graphic representation derived from the City of Marysville Geographic Information System. It was designed and intended for City of Marysville staff use only; it is not guaranteed to survey accuracy. This map is based on the best information available on the date shown on this map.

Any reproduction or sale of this map, or portions thereof, is prohibited without express written authorization by the City of Marysville.

This material is owned and copyrighted by the City of Marysville.

APPENDIX N

Consumer Confidence Report

Water Quality Report 2015

THE CITY OF MARYSVILLE PROVIDES EXCEPTIONAL WATER FOR YOU

We are once again proud to present our annual water quality report covering all testing performed between January 1 and December 31, 2015. Over the years, we have dedicated ourselves to producing drinking water that meets all state and federal standards. We continually strive to adopt new methods for delivering the best-quality drinking water to you.

As new challenges to drinking-water safety emerge, we remain vigilant in meeting the goals of source water protection, water conservation, and community education while continuing to serve the needs of all our water users.

Please remember that we are always available to assist you should you ever have any questions or concerns about your water.

The City of Marysville wants to ensure there are abundant natural resources for a livable and sustainable community. Therefore, the City has adopted a conservation program comprised of regional and local measures. The measures are part of a regional conservation program called the Everett Water Utility Committee or EWUC program.

You can become part of our local and regional conservation solution by picking up your FREE conservation kits and receive a one-time rebate up to a maximum of $50 for certain low-flow toilets, tumble-action washing machines, and other water saving devices. Call (360) 363-8100 for more information.

DISTRIBUTION LEAKAGE STANDARD

Water suppliers are required to maintain water loss in their distribution system to 10% or less, based on a rolling three year average.

CITY OF MARYSVILLE DISTRIBUTION SYSTEM LEAKAGE FOR YEARS 2013-2015 *(in million gallons)*

Total Water Produced and Purchased	6,630 *million gallons*
Authorized Consumption	6,837 *million gallons*
Distribution Leakage Volume	0 *million gallons*

Where does your water come from? How is it treated?

The Lake Goodwin Well is a high-quality source that pulls water from a deep aquifer. The water purity is well above regulatory standards and no treatment is necessary; however a small amount of sodium hypochlorite (chlorine) is added to the water as an additional safety measure.

Edwards Springs and Wells are Marysville's original water source, developed in 1920. The springs and wells sources do not require filtration due to its high-quality water and protected watershed. The spring water is disinfected by two methods to ensure that any contaminants naturally present in the environment are inactivated.

The first method is to pass water through Ultra-Violet Reactors, commonly known as a UV disinfection system. The UV system inactivates larger organisms such as Cryptosporidium and Giardia. In addition to UV, sodium hypochlorite (chlorine) is added, which is the best method for disinfection of viruses and bacteria that might pass through the UV system. The wells system requires disinfection with sodium hypochlorite only.

At the Stillaguamish Filtration Plant, water is piped from a Ranney Well located on the Stillaguamish River to a state-of-the-art treatment system. Water is filtered by a new technology called an ultra-filtration membrane. This membrane filtration system removes 99.99% of microbiological contaminants. After filtration, a small amount of sodium hypochlorite (chlorine) is injected into the system for disinfection of any remaining biological contaminants that might pass through the filters.

Water purchased from the **City of Everett** comes from the Spada Lake Reservoir in the Cascade Mountains where rainwater and snowmelt is collected. At the Everett water treatment plant the water is filtered, disinfected, fluoridated, and the pH is adjusted to control corrosiveness.

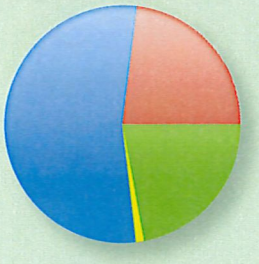

2015 Water Production

- **Everett Intertie:** 54%
- **Edward Springs & Wells:** 23%
- **Stillaguamish Well:** 22%
- **Lake Goodwin Well:** 1%

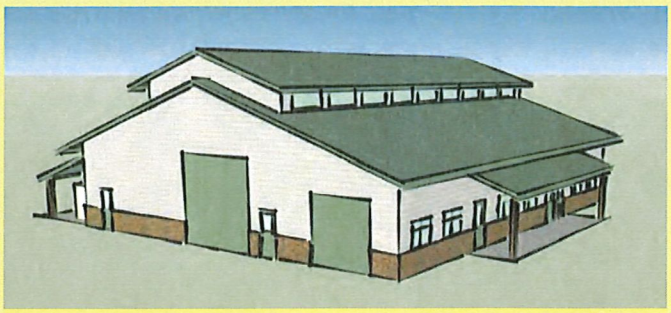

Sunnyside water treatment facility concept

The Sunnyside Water Treatment Facility

Scheduled for completion in early 2017, will further strengthen the City's water production capacity and will further expand the City's ability to provide water during emergency situations. The City will be utilizing the most proven methods for removal of iron and manganese from the two deep wells that together will provide up to 2000 gallons of water per minute. Some residents may notice this change in water supply, as this high quality source contains a greater concentration of minerals compared to the water that they had previously received. These minerals may present themselves in the formation of white spots on dishes and may be seen after washing vehicles.

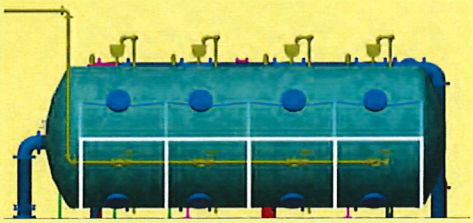

Greensand filtration vessel

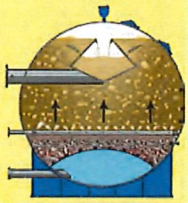

Cross section of vessel

Does our water have fluoride?

The City of Marysville's water system is comprised of multiple sources including water purchased from the City of Everett, as well as several city-owned wells and springs. The City of Everett adds fluoride to its drinking water as a means of promoting dental health. City of Marysville sources are not fluoridated. As a result, Marysville residents may receive water that is fluoridated, non-fluoridated or only partially fluoridated depending on water system operating conditions. Residents concerned with the level of fluoride who are unsure of which source provides their water should contact the City's Water Quality Division at (360) 363-8100.

Drinking water monitoring notice

The City of Marysville is required to monitor your drinking water for the effectiveness of disinfection following the treatment process. Results of regular monitoring are an indicator of whether or not our drinking water meets health standards. During a 26-hour period beginning on August 29th, 2015, a network communication link through which water quality data is acquired from the Edward Springs Treatment Plant was unexpectedly lost. This loss of data acquisition resulted in the inability to monitor the effectiveness of disinfection in the storage reservoir following the treatment process, and therefore we cannot be sure of the quality of your drinking water during that time. However, based on our historical knowledge of the system and additional data that was recorded during this time at the treatment plant, we are confident that the disinfection levels met all regulatory standards. The City has installed additional monitoring equipment in an effort to ensure a more reliable communications system.

Customer views are always welcome

Call the City of Marysville Public Works Department's Water Division at (360) 363-8100 for information about the next opportunity for public participation in decisions about your drinking water. You can also visit us at our office located at 80 Columbia Avenue, Marysville, WA.

You Can Help
KEEP OUR WATER SAFE

Providing our customers with safe drinking water is our primary objective - but did you know that we also need your help in protecting this valuable resource? In some instances, water can unintentionally flow in the backwards direction (called backflow) and it can create a dangerous siphon effect within your household and irrigation plumbing - powerful enough to pull contaminants into your drinking water lines. The best way to avoid this potential contamination, called a cross-connection, is to make sure that your plumbing fixtures do not come in contact with anything that is considered non-potable. For instance, never leave a garden hose submerged in any type of container or tub, or connected to a chemical applicator. You should also have any required backflow prevention assemblies installed on your plumbing system tested annually. Some common applications for backflow preventers are underground irrigation systems, fire suppression systems, water softeners, boilers, and radiant floor heating systems. Please contact the City of Marysville Water Quality Division if you would like us to assist you in determining the best methods for protecting your drinking water.

Health information about your water

Drinking water, including bottled water, may reasonably be expected to contain at least small amounts of some contaminants. The presence of contaminants does not necessarily indicate that water poses a health risk. More information about contaminants and potential health effects can be obtained by calling the EPA's Safe Drinking Water Hotline (1-800-426-4791).

Some people may be more vulnerable to contaminants in drinking water than the general population. Immuno-compromised persons such as persons with cancer undergoing chemotherapy, persons who have undergone organ transplants, people with HIV/AIDS or other immune system disorders, some elderly, and infants can be particularly at risk from infections. These people should seek advice about drinking water from their health care providers. EPA/CDC guidelines on appropriate means to lessen the risk of infection by Cryptosporidium and other microbial contaminants are available from the Safe Drinking Water Hotline (1-800-426-4791).

If present, elevated levels of lead can cause serious health problems, especially for pregnant women and young children. Lead in drinking water is primarily from materials and components associated with service lines and home plumbing. The City of Marysville is responsible for providing high quality drinking water, but cannot control the variety of materials used in plumbing components. When your water has been sitting for several hours, you can minimize the potential for lead exposure by flushing your tap for 30 seconds to 2 minutes before using water for drinking or cooking. If you are concerned about lead in your drinking water, you may wish to have your water tested. Information on lead in drinking water, testing methods, and steps you can take to minimize exposure is available from the Safe Drinking Water Hotline or at http://water.epa.gov/drink/info/lead.

UNREGULATED CONTAMINANT MONITORING RULE 3 (UCMR3)*

Substance	Minimum Reporting Level	Your Water	Range
Chlorate	20	115	43-365
Chromium	0.2	0.7	0 - 4.1
Hexavalent Chromium	0.03	0.6	0 - 2.5
Molybdenum	1	0.1	0 - 1.0
Strontium	0.3	46	14 - 81
Vanadium	0.2	0.9	0 - 4.2

* The Safe Drinking Water Act requires that once every five years EPA issue a new list of no more than 30 unregulated contaminants to be monitored by public water systems, called the Unregulated Contaminant Monitoring Rule (UCMR). The City of Marysville has participated in the first three cycles of the UCMR. The City has shared the results of those subtances that were detected in the City's water during this third cycle (UCMR3). As these substances are not regulated, there is no current maximum contaminant level (MCL) associated with these sample results.

Is there lead in my water?

Stories about lead-contaminated drinking water and the potential public health impacts have been receiving a lot of attention recently. The City's Public Works Department always gives this topic plenty of consideration as we implement the Lead and Copper Rule (LCR) requirements for testing as set out by the EPA. The City tests homes within its service area that are most susceptible to lead and copper corrosion on a 3-year schedule and those levels have all been significantly below the Maximum Contaminant Level (the highest level of a contaminant that can be in drinking water) as defined by the EPA.

In wake of these recent stories, the City reviewed its historical records related to its drinking water sources and has physically inspected its oldest service connections and has found no indication that leaded type service lines exist within the City's service area. The City will continue its efforts in investigating areas where there are limited historical records as a means of assuring all efforts have been put forth to make public health and safety the City's top priority.

Can the water at my home be tested for lead?

Yes, there can be plumbing components within some homes which can contribute to higher lead levels in your water. The most common of these components are pipe, pipe fittings, solder, and individual fixtures (i.e. faucets). You can find additional information through the EPA's website at https://www.epa.gov/your-drinking-water/basic-information-about-lead-drinking-water. If you are concerned that your home's plumbing is susceptible to lead release, you can contact a local lab to have your water tested. Laboratories accredited by the Department of Ecology can be found at: https://fortress.wa.gov/ecy/laboratorysearch/. A typical cost to analyze a lead/copper sample is around $30 per sample.

WATER QUALITY RESULTS 2015 (PWSID# 51900C)

DURING THE PAST YEAR we have taken hundreds of water samples in order to determine the presence of any radioactive, biological, inorganic, volatile organic or synthetic organic contaminants. The table below shows only those contaminants that were detected in the water. Although all of the substances listed here are well below the Maximum Contaminant Level (MCL), we feel it is important that you know exactly what was detected and how much of the substance was present in the water.

REGULATED AT THE SOURCE

CITY OF EVERETT

Substance	MCLG	MCL	Your Water	Range Low	Range High	Sample Date	Complies?	Typical Sources
Arsenic (ppb)	0	10	0	N/A	0	2015	Yes	Erosion of natural deposits; Runoff from orchards
Nitrate (ppm)	10	10	0	N/A	0	2015	Yes	Erosion of natural deposits; Animal waste
Turbidity (ntu)	N/A	TT	0.06	100% of samples met limits		2015	Yes	Soil run-off

EDWARD SPRINGS AND WELLS

Substance	MCLG	MCL	Your Water	Range Low	Range High	Sample Date	Complies?	Typical Sources
Arsenic (ppb)	0	10	5[1]	N/A	5	2015	Yes	Erosion of natural deposits; Runoff from orchards
Nitrate (ppm)	10	10	1.47	N/A	1.47	2015	Yes	Erosion of natural deposits; Animal waste
Turbidity (ntu)	N/A	TT	0.95	N/A	N/A	2015	Yes	Soil run-off

LAKE GOODWIN WELL

Substance	MCLG	MCL	Your Water	Range Low	Range High	Sample Date	Complies?	Typical Sources
Arsenic (ppb)	0	10	4	N/A	4	2015	Yes	Erosion of natural deposits; Runoff from orchards
Nitrate (ppm)	10	10	0	N/A	0	2015	Yes	Erosion of natural deposits; Animal waste

STILLAGUAMISH FILTRATION PLANT

Substance	MCLG	MCL	Your Water	Range Low	Range High	Sample Date	Complies?	Typical Sources
Arsenic [1] (ppb)	0	10	0	N/A	0	2015	Yes	Erosion of natural deposits; Runoff from orchards
Nitrate (ppm)	10	10	0.28	N/A	0.28	2015	Yes	Erosion of natural deposits; Animal waste
Turbidity (ntu)	N/A	TT	0.39	100% of samples met limits		2015	Yes	Soil run-off

REGULATED IN THE DISTRIBUTION SYSTEM

Substance	MCLG	MCL	Your Water	Range Low	Range High	Sample Date	Complies?	Typical Sources
Chlorine (ppm)	MRDLG = 4	4	0.76	0.00	1.50	2015	Yes	Water additive used to control microbes
Fluoride (ppm) **from Everett Source**	MRDLG = 2	4	0.8	0.6	0.9	2015	Yes	Dental Health Additive
TTHM (ppb)	N/A	80	46.1	14.4	62.5	2015	Yes	Byproduct of drinking water disinfection
HAA(5) (ppb)	N/A	60	34.7	7.2	40.2	2015	Yes	Byproduct of drinking water disinfection

LEAD & COPPER RULE - REGULATED AT THE CONSUMER TAP

Substance	MCLG	Action Level	Your Water (90th %)	# of Samples Exceeding the AL	Complies?	Sample Date	Typical Sources
Lead (ppb)	0	15	3	0 out of 30	Yes	2015	Corrosion of household plumbing systems; Erosion of natural deposits
Copper (ppm)	1.3	1.3	0.66	0 out of 30	Yes	2015	Corrosion of household plumbing systems; Erosion of natural deposits

UNIT DESCRIPTIONS: ppm (parts per million), **ppb** (parts per billion), **mg/L** (milligrams per liter)

AL Action Level – concentration of a contaminant, which, if exceeded, triggers treatment or other requirements which a water system must follow.

MCL Maximum Contaminant Level – highest level of contaminant that is allowed in drinking water. MCL's are set as close to the MCLG's as feasible.

MCLG Maximum Contaminant Level Goal – level of a contaminant in drinking water below which there is no known or expected risk to health. MCLG's allow for a margin of safety.

MRDLG Maximum Residual Disinfectant Level Goal – level of a drinking water disinfectant below which there is no known or expected risk to health. MRDLG's do not reflect the benefits of the use of disinfectants to control microbial contaminants.

MRDL Maximum Residual Disinfectant Level – the highest level of a disinfectant allowed in drinking water. There is convincing evidence that addition of a disinfectant is necessary for control of microbial contaminants.

N/A Not Applicable

ND Not Detected

NTU Nephelometric Turbidity Units

TT Treatment Technique – a required process intended to reduce a contaminant level in drinking water.

(1) Your drinking water currently meets EPA's standard for arsenic. However, it does contain low levels of arsenic. There is a small chance that some people who drink water containing low levels of arsenic for many years could develop circulatory disease, cancer, or other health problems. Most types of cancer and circulatory disease are due to factors other than exposure to arsenic. EPA's standard balances the current understanding of arsenic's health effects against the cost of removing arsenic from drinking water.

APPENDIX O

IDSE Report

Form 7: IDSE Report for Standard Monitoring

I. GENERAL INFORMATION

A. PWS Information*

B. Date Submitted* December 16, 2008

PWSID: WA53 51900 C

PWS Name: Marysville Utilities

PWS Address: 80 Columbia Avenue

City: Marysville State: WA Zip: 98720

Population Served: 51,000

System Type:	Source Water Type:	Buying / Selling Relationships:
X CWS ☐ NTNCWS	X Subpart H ☐ Ground	X Consecutive System ☐ Wholesale System ☐ Neither

C. PWS Operations

Residual Disinfectant Type: X Chlorine ☐ Chloramines ☐ Other:_____

Number of Disinfected Sources:___ Surface _2_ GWUDI _1_ Ground _1_ Purchased

D. Contact Person*

Name: David Zull

Title: Project Manager

Phone #: 360-363-8282 Fax #: 360-363-2175

E-mail: dzull@ci.marysville.wa.us

II. STAGE 2 DBPR REQUIREMENTS*

A. Number of Compliance Monitoring Sites	B. Schedule	C. Compliance Monitoring Frequency
Highest TTHM: 3 Highest HAA5: 3 Existing Stage 1: 2 Total: 8	X Schedule 1 ☐ Schedule 2 ☐ Schedule 3 ☐ Schedule 4	☐ During peak historical month (1 monitoring period) X Every 90 days (4 monitoring periods)

Form 7: IDSE Report for Standard Monitoring

III. MONITORING RESULTS*

A. Did you deviate in any way from your approved standard monitoring plan? x Yes No

If YES, explain (attach additional pages if necessary):

1. The boundary of the North 240 Pressure Zone shifted to the south in July 2008. As a result the location of Standard Monitoring Site T-4, originally associated with low chlorine residual surface water supply in the South 240 zone, is now associated with the North 240 Zone chlorinated GWUDI supply. A decrease in both TTHM and HAA5 is apparent in the August data from Site T-4. During other sample periods the T-4 site did not have high enough TTHM and HAA5 concentrations that it would have been selected for Stage 2 compliance monitoring had the pressure zone boundary condition shift not occurred.

2. The SMP stated that sampling for Site E-1 would occur at the 44th St. NE vault until the Sunnyside reservoir was brought on-line, at which point the site might be moved closer to the entry point associated with the reservoir. All sample periods occurred after the reservoir was on-line, but the sample point was not changed. All sampling occurred at the 44th St. NE vault at 4021 71st Ave NE near the reservoir inlet about 1200 ft upstream of the entry point.

3. See Attachment 1

B. Where were your TTHM and HAA5 samples analyzed?

☐ In-House

Is your in-house laboratory certified? ☐ Yes ☐ No

X Certified Laboratory

Name of certified laboratory: 1. Edge Analytical Burlington, WA

2. AmTest Laboratories Kirkland, WA for August Sample Period only

C. What method(s) was used to analyze your TTHM and HAA5 samples?

TTHM	HAA5
☐ EPA 502.2	☐ EPA 552.1
X EPA 524.2	X EPA 552.2
☐ EPA 551.1	☐ EPA 552.3
	☐ SM 6251 B

Form 7: IDSE Report for Standard Monitoring

III. MONITORING RESULTS

D. IDSE Standard Monitoring Results - TTHM

Site ID[1]	Data Type	TTHM (mg/L)						LRAA
E-1	Sample Date	10/9/07	12/12/07	2/12/08	4/15/08	6/10/08	8/12/08	
	Sample Result	0.022	0.039	0.026	0.032	0.034	0.021	0.029
E-2	Sample Date	10/9/07	12/12/07	2/12/08	4/15/08	6/10/08	8/12/08	
	Sample Result	0.016	0.022	0.015	0.020	0.018	0.015	0.018
E-3	Sample Date	10/9/07	12/12/07	2/12/08	4/15/08	6/10/08	8/12/08	
	Sample Result	0.012	0.011	0.024	0.046	0.006	0.002	0.017
A-1	Sample Date	10/9/07	12/12/07	2/12/08	4/15/08	6/10/08	8/12/08	
	Sample Result	0.042	0.036	0.030	0.032	0.034	0.024	0.033
A-2	Sample Date	10/9/07	12/12/07	2/12/08	4/15/08	6/10/08	8/12/08	
	Sample Result	0.062	0.043	0.044	0.030	0.030	0.024	0.039
A-3	Sample Date	10/9/07	12/12/07	2/12/08	4/15/08	6/10/08	8/12/08	
	Sample Result	0.039	0.048	0.037	0.028	0.029	0.022	0.034
A-4	Sample Date	10/9/07	12/12/07	2/12/08	4/15/08	6/10/08	8/12/08	
	Sample Result	0.017	0.023	0.019	0.022	0.021	0.018	0.020
T-1	Sample Date	10/9/07	12/12/07	2/12/08	4/15/08	6/10/08	8/12/08	
	Sample Result	0.042	0.034	0.028	0.032	0.036	0.027	0.033

[1] *Verify that site IDs for IDSE standard monitoring sites match the site IDs in your Standard Monitoring Plan. Attach additional sheets as needed for IDSE standard monitoring results.*

Form 7: IDSE Report for Standard Monitoring

III. MONITORING RESULTS

E. IDSE Standard Monitoring Results - HAA5

Site ID[1]	Data Type	HAA5 (mg/L)						LRAA
E-1	Sample Date	10/9/07	12/12/07	2/12/08	4/15/08	6/10/08	8/12/08	
	Sample Result	0.020	0.026	0.039	0.029	0.033	0.040	0.031
E-2	Sample Date	10/9/07	12/12/07	2/12/08	4/15/08	6/10/08	8/12/08	
	Sample Result	0.012	0.019	0.017	0.014	0.015	0.022	0.016
E-3	Sample Date	10/9/07	12/12/07	2/12/08	4/15/08	6/10/08	8/12/08	
	Sample Result	0.010	0.009	0.022	0.024	0.005	0.006	0.013
A-1	Sample Date	10/9/07	12/12/07	2/12/08	4/15/08	6/10/08	8/12/08	
	Sample Result	0.018	0.030	0.034	0.023	0.025	0.038	0.028
A-2	Sample Date	10/9/07	12/12/07	2/12/08	4/15/08	6/10/08	8/12/08	
	Sample Result	0.013	0.022	0.020	0.026	0.035	0.042	0.026
A-3	Sample Date	10/9/07	12/12/07	2/12/08	4/15/08	6/10/08	8/12/08	
	Sample Result	0.015	0.019	0.025	0.027	0.027	0.030	0.024
A-4	Sample Date	10/9/07	12/12/07	2/12/08	4/15/08	6/10/08	8/12/08	
	Sample Result	0.012	0.026	0.020	0.016	0.019	0.026	0.020
T-1	Sample Date	10/9/07	12/12/07	2/12/08	4/15/08	6/10/08	8/12/08	
	Sample Result	0.018	0.023	0.035	0.025	0.015	0.033	0.025

[1] *Verify that site IDs for IDSE standard monitoring sites match the site IDs in your Standard Monitoring Plan. Attach additional sheets as needed for IDSE standard monitoring results.*

Form 7: IDSE Report for Standard Monitoring

III. MONITORING RESULTS

F. Stage 1 DBPR Compliance Monitoring Results - TTHM

Site ID[1]	Data Type	TTHM (mg/L)				LRAA
Stage 1# 1	Sample Date	11/12/2007	2/11/2008	5/12/2008	8/11/2008	
	Sample Result	0.016	0.018	0.023	0.019	0.019
Stage 1# 2	Sample Date	11/12/2007	2/11/2008	5/12/2008	8/11/2008	
	Sample Result	0.015	0.015	0.019	0.013	0.016
Stage 1# 3	Sample Date	11/12/2007	2/11/2008	5/12/2008	8/11/2008	
	Sample Result	0.016	0.020	0.019	0.003	0.014
Stage 1# 4	Sample Date	11/12/2007	2/11/2008	5/12/2008	8/11/2008	
	Sample Result	0.016	0.018	0.022	0.013	0.017
Stage 1# 5	Sample Date	11/12/2007	2/11/2008	5/12/2008	8/11/2008	
	Sample Result	0.017	0.018	0.026	0.009	0.017
Stage 1# 6	Sample Date	11/12/2007	2/11/2008	5/12/2008	8/11/2008	
	Sample Result	0.016	0.019	0.001	0.019	0.014
Stage 1# 7	Sample Date	11/12/2007	2/11/2008	5/12/2008	8/11/2008	
	Sample Result	0.016	0.021	0.025	0.003	0.016
Stage 1# 8	Sample Date	11/12/2007	2/11/2008	5/12/2008	8/11/2008	
	Sample Result	0.025	0.020	0.027	0.027	0.025

[1] *Verify that site IDs for Stage 1 compliance monitoring sites match the site IDs in your Standard Monitoring Plan. Attach additional sheets as needed for Stage 1 compliance monitoring results.*

Form 7: IDSE Report for Standard Monitoring

III. MONITORING RESULTS

G. Stage 1 DBPR Compliance Monitoring Results - HAA5

Site ID[1]	Data Type	HAA5 (mg/L)				LRAA
Stage 1# 1	Sample Date	11/12/2007	2/11/2008	5/12/2008	8/11/2008	
	Sample Result	0.008	0.016	0.022	0.030	0.019
Stage 1# 2	Sample Date	11/12/2007	2/11/2008	5/12/2008	8/11/2008	
	Sample Result	0.008	0.015	0.022	0.025	0.017
Stage 1# 3	Sample Date	11/12/2007	2/11/2008	5/12/2008	8/11/2008	
	Sample Result	0.007	0.019	0.022	0.008	0.014
Stage 1# 4	Sample Date	11/12/2007	2/11/2008	5/12/2008	8/11/2008	
	Sample Result	0.008	0.008	0.022	0.021	0.015
Stage 1# 5	Sample Date	11/12/2007	2/11/2008	5/12/2008	8/11/2008	
	Sample Result	0.008	0.019	0.024	0.018	0.017
Stage 1# 6	Sample Date	11/12/2007	2/11/2008	5/12/2008	8/11/2008	
	Sample Result	0.007	0.010	0.023	0.031	0.018
Stage 1# 7	Sample Date	11/12/2007	2/11/2008	5/12/2008	8/11/2008	
	Sample Result	0.008	0.010	0.022	0.007	0.012
Stage 1# 8	Sample Date	11/12/2007	2/11/2008	5/12/2008	8/11/2008	
	Sample Result	0.010	0.010	0.025	0.034	0.020

[1] *Verify that site IDs for Stage 1 compliance monitoring sites match the site IDs in your Standard Monitoring Plan. Attach additional sheets as needed for Stage 1 compliance monitoring results.*

Form 7: IDSE Report for Standard Monitoring

IV. JUSTIFICATION OF STAGE 2 DBPR COMPLIANCE MONITORING SITES*

Stage 2 Compliance Monitoring Site ID	Site Type	Justification
SMP# A-2	X Highest TTHM ☐ Highest HAA5 ☐ Stage 1 DBPR	Highest TTHM LRAA
SMP# H-4	☐ Highest TTHM X Highest HAA5 ☐ Stage 1 DBPR	Highest remaining HAA5 LRAA
Stage 1# 1	☐ Highest TTHM ☐ Highest HAA5 X Stage 1 DBPR	Highest HAA5 LRAA in remaining Stage 1 average residence time sites
SMP# T-2	X Highest TTHM ☐ Highest HAA5 ☐ Stage 1 DBPR	Highest remaining TTHM LRAA
SMP# A-3	X Highest TTHM ☐ Highest HAA5 ☐ Stage 1 DBPR	Highest remaining TTHM LRAA
SMP# E-1	☐ Highest TTHM X Highest HAA5 ☐ Stage 1 DBPR	Highest remaining HAA5 LRAA
Stage 1# 8	☐ Highest TTHM ☐ Highest HAA5 X Stage 1 DBPR	Highest TTHM LRAA in remaining Stage 1 sites. This site was not an “average residence time” site, but has been selected here because it was highest in both TTHM and HAA5 of all of the Stage 1 sites.
SMP# H-1	☐ Highest TTHM X Highest HAA5 ☐ Stage 1 DBPR	Highest remaining HAA5 LRAA

Attach additional copies of this sheet if you need more room.

Form 7: IDSE Report for Standard Monitoring

V. PEAK HISTORICAL MONTH AND PROPOSED STAGE 2 DBPR COMPLIANCE MONITORING SCHEDULE

A. Peak Historical Month* February

B. Is Your Peak Historical Month the Same as in Your IDSE Standard Monitoring Plan?

☐ Yes X No

If no, explain how you selected your new peak historical month *(attach additional sheets if needed)*

See Attachment 3

C. Proposed Stage 2 DBPR Compliance Monitoring Schedule*

Stage 2 Compliance Monitoring Site ID	Projected Sampling Date (date or week)[1]			
	period 1	period 2	period 3	period 4
SMP# A-2	2nd Week of February	2nd Week of May	2nd Week of August	2nd Week of November
SMP# H-4	2nd Week of February	2nd Week of May	2nd Week of August	2nd Week of November
Stage 1# 1	2nd Week of February	2nd Week of May	2nd Week of August	2nd Week of November
SMP# T-2	2nd Week of February	2nd Week of May	2nd Week of August	2nd Week of November
SMP# A-3	2nd Week of February	2nd Week of May	2nd Week of August	2nd Week of November
SMP# E-1	2nd Week of February	2nd Week of May	2nd Week of August	2nd Week of November
Stage 1# 8	2nd Week of February	2nd Week of May	2nd Week of August	2nd Week of November
SMP# H-1	2nd Week of February	2nd Week of May	2nd Week of August	2nd Week of November

[1] *period = monitoring period. Complete for the number of monitoring periods from Section II.C.*

Attach additional copies of this sheet if you need more room.

Form 7: IDSE Report for Standard Monitoring

VI. DISTRIBUTION SYSTEM SCHEMATIC*

ATTACH a schematic of your distribution system if it has changed since you submitted your Standard Monitoring Plan (Form 6).

VII. ATTACHMENTS

X Additional sheets for explaining how and why you deviated from your standard monitoring plan (Section III).

X Additional sheets for Standard Monitoring Results (Section III). **REQUIRED** if you are a subpart H system serving **more than 49,999 people** or a ground water system serving **more than 499,999 people**.

☐ Additional sheets for Stage 2 DBPR Compliance Monitoring Sites (Section IV). **REQUIRED** if you are a subpart H system serving **more than 249,999 people**.

X Additional sheets for explaining how you selected the peak historical month (Section V).

☐ Additional sheets for proposed Stage 2 DBPR peak historical month and compliance monitoring schedule (Section V). **REQUIRED** if you are a subpart H system serving **more than 249,999 people**.

X Distribution system schematic* (Section VI). **REQUIRED if it has changed from your approved IDSE standard monitoring plan**.

X Compliance calculation procedures (for Stage 2 Compliance Monitoring Plan).

Total Number of Pages in Your Report: __21__

Note: Fields with an asterisk (*) are required by the Stage 2 DBPR

Attachment 1

Additional Sheets for Explanations of Deviations from the SMP (Section III)

Additional Deviations:

3. The SMP submitted September 26, 2006 included a statement that the eight Stage 1 DBPR Compliance Monitoring Sites were in the process of being revised because of inappropriate historical sites and the addition of a water treatment plant to the system. The location of the new Stillaguamish Treatment Plant was indicated on the schematic provided with the SMP, but the locations of the Stage 1 compliance sites have changed. The physical addresses of the revised Stage 1 compliance sites are provided in the table below. All Stage 1 monitoring that occurred during the IDSE monitoring period was done at the locations provided in the Table. Locations of these sites are shown on the updated schematic in Attachment 4.

Site ID	Location	Water Source	Type of Site
1	175th Pl / Spring Lane Ave	Edwards Springs	Average Residence Time
2	151st Pl / 45 Road	Edwards Springs	Average Residence Time
3	169th St / Smokey Point Blvd	Edwards Springs	Average Residence Time
4	140th St / Smokey Point Blvd	Edwards Springs	Longest Residence Time
5	139th Place / 54th Drive NE	Stillaguamish	Average Residence Time
6	4529 130th Pl NE	Stillaguamish	Average Residence Time
7	3825 176th Pl NE	Stillaguamish	Average Residence Time
8	122nd Pl / 51st Ave NE	Stillaguamish	Longest Residence Time

Attachment 2

Additional Sheets for Standard Monitoring Results (Section III)

Form 7: IDSE Report for Standard Monitoring

III. MONITORING RESULTS (Continued)*

D. IDSE Standard Monitoring Results - TTHM

Site ID[1]	Data Type	TTHM (mg/L)						LRAA
T-2	Sample Date	10/9/07	12/12/07	2/12/08	4/15/08	6/10/08	8/12/08	
	Sample Result	0.052	0.045	0.031	0.038	0.037	0.023	0.038
T-3	Sample Date	10/9/07	12/12/07	2/12/08	4/15/08	6/10/08	8/12/08	
	Sample Result	0.037	0.030	0.026	0.028	0.027	0.021	0.028
T-4	Sample Date	10/9/07	12/12/07	2/12/08	4/15/08	6/10/08	8/12/08	
	Sample Result	0.042	0.035	0.029	0.030	0.035	0.015	0.031
T-5	Sample Date	10/9/07	12/12/07	2/12/08	4/15/08	6/10/08	8/12/08	
	Sample Result	0.025	0.037	0.027	0.033	0.029	0.016	0.028
H-1	Sample Date	10/9/07	12/12/07	2/12/08	4/15/08	6/10/08	8/12/08	
	Sample Result	0.038	0.033	0.024	0.027	0.028	0.022	0.028
H-2	Sample Date	10/9/07	12/12/07	2/12/08	4/15/08	6/10/08	8/12/08	
	Sample Result	0.030	0.026	0.017	0.028	0.022	0.014	0.023
H-3	Sample Date	10/9/07	12/12/07	2/12/08	4/15/08	6/10/08	8/12/08	
	Sample Result	0.041	0.034	0.023	0.028	0.028	0.023	0.029
H-4	Sample Date	10/9/07	12/12/07	2/12/08	4/15/08	6/10/08	8/12/08	
	Sample Result	0.033	0.042	0.025	0.033	0.036	0.022	0.032

[1] *Verify that site IDs for IDSE standard monitoring sites match the site IDs in your Standard Monitoring Plan.*

Attach additional sheets as needed for IDSE standard monitoring results.

Form 7: IDSE Report for Standard Monitoring

III. MONITORING RESULTS (Continued)*

E. IDSE Standard Monitoring Results - HAA5

Site ID[1]	Data Type	HAA5 (mg/L)						LRAA
T-2	Sample Date	10/9/07	12/12/07	2/12/08	4/15/08	6/10/08	8/12/08	
	Sample Result	0.016	0.021	0.037	0.029	0.027	0.040	0.029
T-3	Sample Date	10/9/07	12/12/07	2/12/08	4/15/08	6/10/08	8/12/08	
	Sample Result	0.014	0.026	0.042	0.026	0.028	0.030	0.027
T-4	Sample Date	10/9/07	12/12/07	2/12/08	4/15/08	6/10/08	8/12/08	
	Sample Result	0.020	0.027	0.039	0.029	0.027	0.020	0.027
T-5	Sample Date	10/9/07	12/12/07	2/12/08	4/15/08	6/10/08	8/12/08	
	Sample Result	0.015	0.037	0.028	0.021	0.019	0.024	0.024
H-1	Sample Date	10/9/07	12/12/07	2/12/08	4/15/08	6/10/08	8/12/08	
	Sample Result	0.021	0.029	0.042	0.028	0.023	0.043	0.031
H-2	Sample Date	10/9/07	12/12/07	2/12/08	4/15/08	6/10/08	8/12/08	
	Sample Result	0.021	0.027	0.034	0.033	0.025	0.031	0.028
H-3	Sample Date	10/9/07	12/12/07	2/12/08	4/15/08	6/10/08	8/12/08	
	Sample Result	0.020	0.030	0.039	0.031	0.026	0.038	0.031
H-4	Sample Date	10/9/07	12/12/07	2/12/08	4/15/08	6/10/08	8/12/08	
	Sample Result	0.021	0.032	0.039	0.033	0.031	0.039	0.032

[1] *Verify that site IDs for IDSE standard monitoring sites match the site IDs in your Standard Monitoring Plan.*

Attach additional sheets as needed for IDSE standard monitoring results.

Attachment 3

Additional Sheets Explaining Selection of Peak Historical Month

(Section V)

In the SMP developed for Marysville the peak month was expected to be August based on temperature data. Results of IDSE Standard Monitoring indicate that the peak month for TTHM formation is October (average of 34.3 ppb during standard monitoring), and the peak month for HAA5 formation is February (average of 32.0 ppb during standard monitoring). The TTHM and HAA5 averages calculated for each site during each monitoring period are summarized in the table below. The highest average month for each type of DBP are highlighted in the Table.

Sampling Period	Average TTHM (mg/L)	Average HAA5 (mg/L)
10/9/2007	0.034*	0.016
12/12/2007	0.034	0.025
2/12/2008	0.026	0.032*
4/15/2008	0.030	0.026
6/10/2008	0.028	0.024
8/12/2008	0.019	0.031
Overall	0.028	0.024

* Indicates sampling periods with highest average TTHM and HAA5

Monthly or quarterly DBP data supersedes temperature data in the EPA peak historical month selection protocol. As such, selection of a new peak month is required for Marysville. According to the EPA protocol, if the highest TTHM and HAA5 levels occur in different months, consideration should be given to the contaminant of greatest concern. At Marysville, the average value for DBPs during a given month that is closest to the MCL (60 µg/L for HAA5 and 80 µg/L for TTHM) is February based on average HAA5 concentration. At most of the standard monitoring sites, HAA5 values were slightly higher in the month of August than in February, but the August average is lowered by the apparently low reading at Site T-4 caused by the shift in 240 Zone boundary location. Average HAA5 concentrations calculated without values from Site T-4 are 31.5 and 32.0 ppb for February and August, respectively. The difference is less than 1 ppb, which is not significant. As such February was selected as the peak historical month because average TTHM concentrations were considerably higher in February than they were in August. In any event, a quarterly sampling schedule includes both the months of February and August.

.

Attachment 4

Revised Distribution System Schematic Including Accurate Locations of Revised Stage 1 DBPR Compliance Monitoring Sites

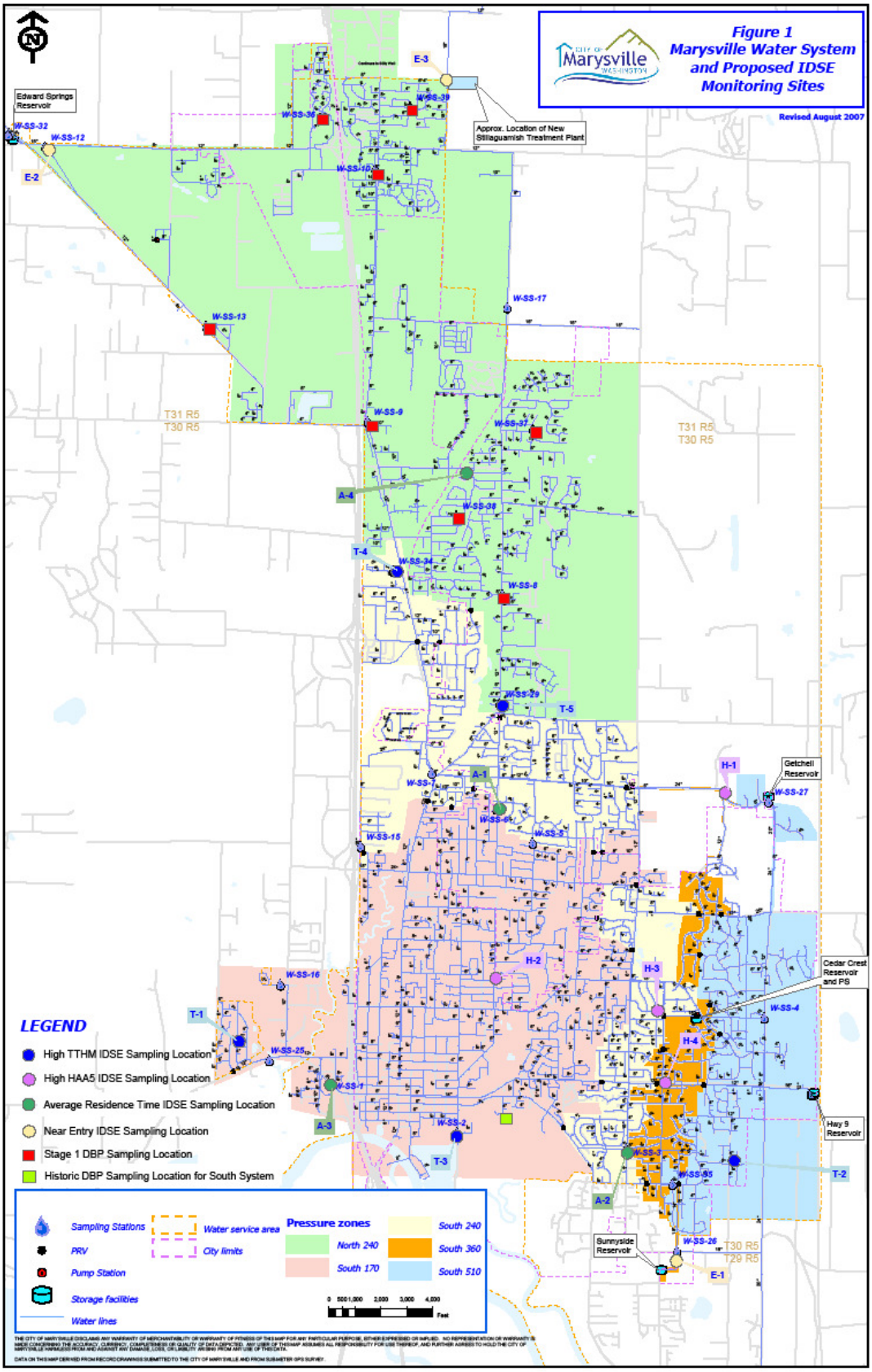
Figure 1
Marysville Water System
and Proposed IDSE
Monitoring Sites
Revised August 2007
Edward Springs Reservoir
Approx. Location of New Stillaguamish Treatment Plant
Getchell Reservoir
Cedar Crest Reservoir and PS
Hwy 9 Reservoir
Sunnyside Reservoir
T31 R5
T30 R5
T29 R5
LEGEND
High TTHM IDSE Sampling Location
High HAA5 IDSE Sampling Location
Average Residence Time IDSE Sampling Location
Near Entry IDSE Sampling Location
Stage 1 DBP Sampling Location
Historic DBP Sampling Location for South System
Sampling Stations
PRV
Pump Station
Storage facilities
Water lines
Water service area
City limits
Pressure zones
North 240
South 170
South 240
South 360
South 510
Feet

Attachment 5

Compliance Calculation Procedures

Compliance Calculation Procedures

Compliance monitoring for the DBPR Stage 2 will occur at sampling intervals of 90 days. During each sample period, samples will be collected at the sites specified in the IDSE Report. The Site I.D.s and physical locations of the eight compliance monitoring sites specified for the City of Marysville are summarized in the table below:

Stage 2 Compliance Monitoring Site ID		Location
1	A-2	9200 Block / 55th Ave NE
2	H-4	7100 Block / 64th St NE
3	Stage1 #1	175th Pl / Spring Lane Ave
4	T-2	55th Pl / 79th Ave NE
5	A-3	33rd Ave NE / Marine Dr
6	E-1	4021 71st Ave NE (reservoir inlet)
7	Stage1 #8	122nd Pl / 51st Ave NE
8	H-1	7415 100th St NE

Sampling at all eight sites will occur at the following regular sampling periods each year:

Projected Sampling date			
Period 1	**Period 2**	**Period 3**	**Period 4**
2nd Week of February	2nd Week of May	2nd Week of August	2nd Week of November

Samples collected during Stage 2 DBPR monitoring periods will be analyzed for TTHM and HAA5 at AmTest Laboratories of Kirkland, WA or some other certified laboratory. TTHM will be analyzed using EPA 524.2, EPA 502.2 or EPA 551.1. HAA5 will be analyzed using EPA 552.1, EPA 552.2, EPA 552.3 or SM 6251B.

At the end of the each quarterly monitoring period, locational running annual averages (LRAAs) for TTHM and HAA5 at each site will be calculated and reported based on the sampling results of that quarter and the three preceding quarters. LRAA calculation and reporting will begin the fourth sampling period after the Stage 2 DBPR is implemented in April of 2012, and continue regularly every following quarter. For example, the first 2 compliance calculation and reporting periods will proceed as follows:

> February 2013: TTHM and HAA5 LRAAs calculated and reported for each site using results from May 2012, August 2012, November 2012, and February 2013.
>
> May 2013 (2nd reporting period): TTHM and HAA5 LRAAs for each site using results from August 2012, November 2012, February 2013, and May 2013.

The method for LRAA calculations will use the arithmetic average of the four most recent quarterly sets of results for HAA5 or TTHM at each site. LRAA calculations will follow the method of the sample calculation below:

Sample Calculation

Given the following hypothetical set of compliance monitoring results for Site A-2:

HAA5	TTHM
Period 1 = 0.0283 mg/L	Period 1 = 0.0303 mg/L
Period 2 = 0.0294 mg/L	Period 2 = 0.0310 mg/L
Period 3 = 0.0285 mg/L	Period 3 = 0.0296 mg/L
Period 4 = 0.0312 mg/L	Period 4 = 0.0294 mg/L

The LRAA for each DBP shall be calculated as follows:

$$LRAA_{HAA5} = \left[\frac{(Period1\,\mathrm{Re}\,sult) + (Period2\,\mathrm{Re}\,sult) + (Period3\,\mathrm{Re}\,sult) + (Period4\,\mathrm{Re}\,sult)}{4}\right]$$

$$= \left[\frac{(0.0283) + (0.0294) + (0.0285) + (0.0312)}{4}\right] = 0.02935 mg/L$$

Results for each DBP LRAA shall be rounded to three places (i.e. 1 part per billion) for reporting to EPA:

$$LRAA_{HAA5} = 0.02935 mg/L \Rightarrow 0.029 mg/L$$

$$LRAA_{TTHM} = \left[\frac{(Period1\,\mathrm{Re}\,sult) + (Period2\,\mathrm{Re}\,sult) + (Period3\,\mathrm{Re}\,sult) + (Period4\,\mathrm{Re}\,sult)}{4}\right]$$

$$= \left[\frac{(0.0303) + (0.0310) + (0.0296) + (0.0294)}{4}\right] = 0.030075 mg/L$$

Results rounded for reporting:

$$LRAA_{TTJHM} = 0.030075 mg/L \Rightarrow 0.030 mg/L$$

APPENDIX P

Hydraulic Model Node Diagram

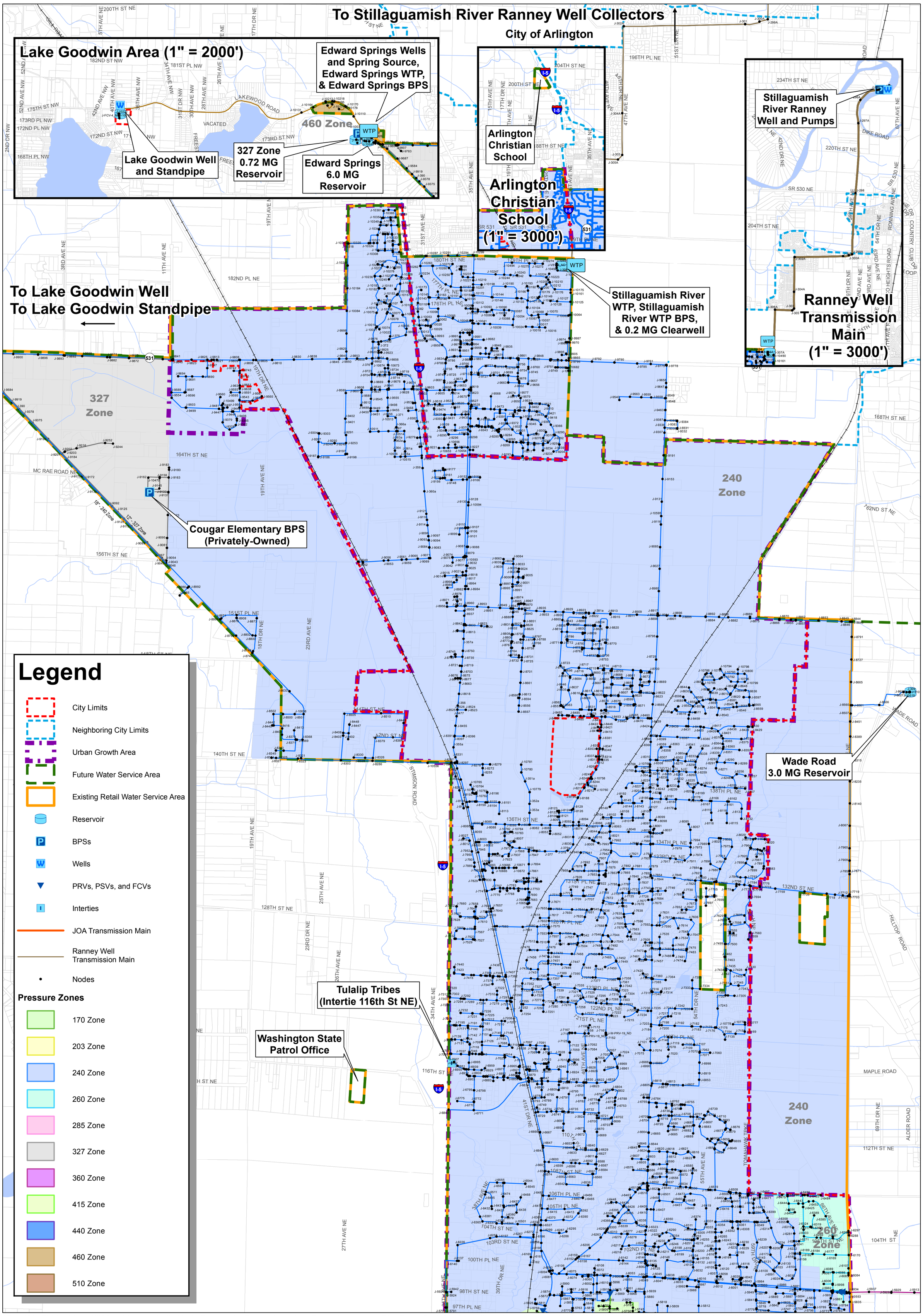

J:\Data\MAR\114-084\GIS\Maps\Appendix Q (Node Diagram) - Figure A.mxd By:zschrempp Plot Date: 5/12/2016 Coordinate System: NAD 1983 StatePlane Washington North FIPS 4601 Feet

NORTH

RH2 ENGINEERS PLANNERS SCIENTISTS

1 inch = 1,200 feet

0 600 1,200 2,400 Feet

DRAWING IS FULL SCALE WHEN BAR MEASURES 2"

CITY OF Marysville WASHINGTON

Appendix Q - Figure A
Node Diagram - North

PRELIMINARY

City of Marysville
2016 Water System Plan

Vicinity Map

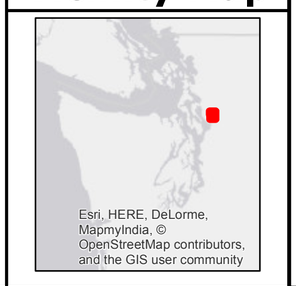

This map is a graphic representation derived from the City of Marysville Geographic Information System. It was designed and intended for City of Marysville staff use only; it is not guaranteed to survey accuracy. This map is based on the best information available on the date shown on this map.

Any reproduction or sale of this map, or portions thereof, is prohibited without express written authorization by the City of Marysville.

This material is owned and copyrighted by the City of Marysville.

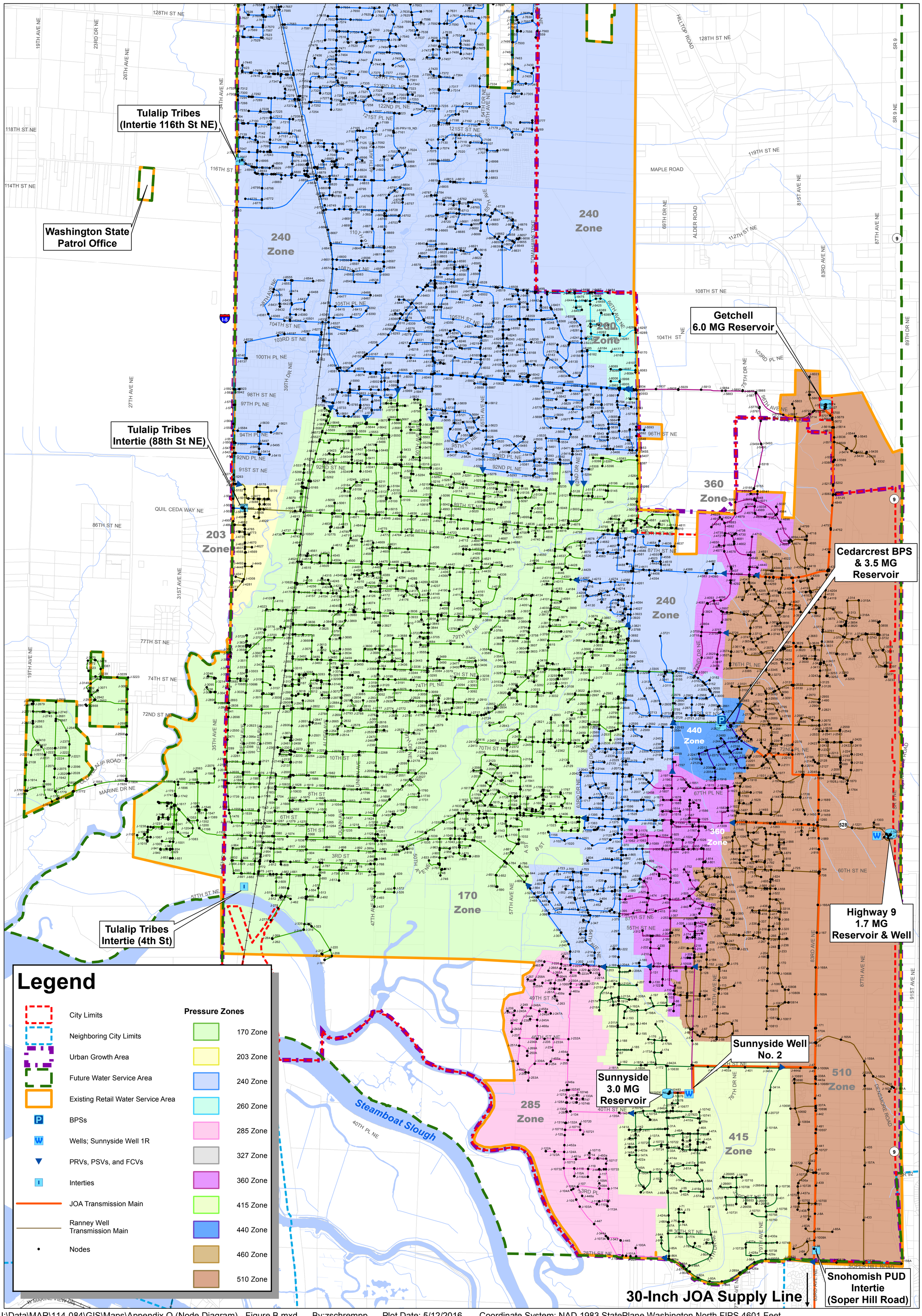

J:\Data\MAR\114-084\GIS\Maps\Appendix Q (Node Diagram) - Figure B.mxd By:zschrempp Plot Date: 5/12/2016 Coordinate System: NAD 1983 StatePlane Washington North FIPS 4601 Feet

NORTH

RH2 ENGINEERS PLANNERS SCIENTISTS

1 inch = 1,200 feet

0 600 1,200 2,400 Feet

DRAWING IS FULL SCALE WHEN BAR MEASURES 2"

CITY OF Marysville WASHINGTON

Appendix Q - Figure B
Node Diagram - South

PRELIMINARY

City of Marysville
2016 Water System Plan

Vicinity Map

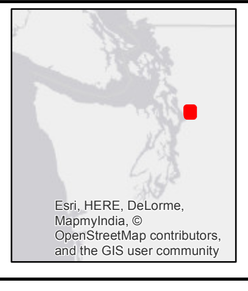

This map is a graphic representation derived from the City of Marysville Geographic Information System. It was designed and intended for City of Marysville staff use only; it is not guaranteed to survey accuracy. This map is based on the best information available on the date shown on this map.

Any reproduction or sale of this map, or portions thereof, is prohibited without express written authorization by the City of Marysville.

This material is owned and copyrighted by the City of Marysville.

APPENDIX Q

DOH Notices

Washington State Department of Health
Division of Environmental Health
Office of Drinking Water

PUBLIC NOTICE CERTIFICATION
Acute Coliform MCL

Within 10 days of notifying your customers, you must send a copy of each type of notice you distribute (hand-delivered notices, press releases, newspaper articles, etc.) to our regional office. Also, complete and send this form, which certifies that you have met all the public notification requirements. If the boil water advisory remains in effect more than three months, you must notify your water users again and provide another Public Notice Certification to us. *With this certification, you are also stating that you will meet future requirements for notifying new billing units of the violation or situation.*

Water System:_____ID #_____County:_____

Violation Date:_____ / _____ / _____ Violation Type:_____

This public water system certifies that public notice has been given to water users, following state and federal requirements for delivery, content, and deadlines.

Complete the following items:

Yes No

☐ ☐ Distribution was completed on ___ / ___ /____. Check all that apply:
- ☐ Hand delivery,
- ☐ Press release (TV, radio, newspaper, etc.),
- ☐ Posting at_____ (by DOH approval only),
- ☐ Other _____ (by DOH approval only).

☐ ☐ Were the water users notified within 24 hours?

_____ _____ _____
Signature of owner or operator Position Date

If you need this publication in an alternate format, call (800) 525-0127 or for TTY/TDD call (877) 833-6341.

Northwest Regional Office:
20435 72nd Ave S Suite 200
Kent WA 98032
(253) 395-6775
Fax: (253) 395-6760

Southwest Regional Office:
PO Box 47823
Olympia WA 98504-7823
(360) 236-3030
Fax (360) 664-8058

Eastern Regional Office:
16201 E Indiana Ave Suite 1500
Spokane Valley WA 99216
(509) 329-2100
Fax: (509) 329-2104

NOTICE TO WATER SYSTEM USERS
ANNUAL NITRATE MONITORING VIOLATION FORM

We, _____ Water System, I.D. _____, located in _____County are required to monitor your drinking water for specific contaminants on a regular basis. Results of regular monitoring are an indicator of whether or not your drinking water meets health standards. During _____, we did not monitor or test for nitrate, and therefore cannot be sure of the quality of your drinking water during that time.

At this time:

☐ No action is required by the users.

☐ Our routine nitrate sample required for _____ *(current year)* has been collected.

☐ Samples will be collected in the future as required.

☐ Other information for customers:

For more information, please contact _____ at ( )___-_____ or at _____.
(owner or operator) (phone number) (address)

Please share this information with all the other people who drink this water, especially those who may not have received this notice directly (for example, people in apartments, nursing homes, schools, and businesses.) You can do this by posting this notice in a public place or distributing copies by hand or mail.

This notice is sent to you by _____ Water System on __/__/__

Annual Nitrate Monitoring Public Notice Certification Form

(This section must be completed by Water System. Signature below indicates notice contained all required elements.)

Complete the following items (check all that apply):

Washington State Department of Health
Division of Environmental Health
Office of Drinking Water

☐ Notice mailed to all water customers on ____ / ____/____.

☐ Notice hand delivered to all water customers on ___ / ___ /___.

☐ Notice published in newspaper (attach copy)

☐ Notice posted at _____ on ___ / ___ / ____.
(***By Department Approval Only***)

_____ _____ _____
Signature of owner or operator Position Date

Send copy of completed notification and certification to:

Denise Garrett, Lead and Copper Program Manager
Office of Drinking Water
PO Box 47822
Olympia, WA 98504-7822
FAX (360) 236-2252

If you need this publication in an alternate format, call (800) 525-0127. For TTY/TDD, call (800) 833-6388.

AVISO A LOS USUARIOS DEL SISTEMA DE AGUA

FORMULARIO DE VIOLACIÓN DEL MONITOREO ANUAL DE NITRATO

Nosotros, el sistema de agua _____, con número de identificación (ID) _____, situado en el condado de _____, estamos obligados a monitorear regularmente su agua potable por contaminantes específicos. Los resultados del monitoreo indican si su agua potable cumple o no con las normas de salud. Durante el año _____, no realizamos monitoreo ni pruebas del agua para el nitrato, y por lo tanto no podemos asegurar la calidad de su agua potable durante ese tiempo.

En este momento:

☐ No se requiere ninguna acción de los usuarios.

☐ Hemos colectado la muestra rutinaria de nitrato para el _____ (el año actual).

☐ Colectaremos las muestras en el futuro según la norma.

☐ Otra información para los usuarios:

Para más información, por favor contacte a _____ al (_____) _____ - _____ o en .

(El dueño / operador) (El número de teléfono) (La dirección)

Por favor comparte esta información con otras personas que pudieran tomar agua de este sistema, especialmente con aquellos que no hayan recibido este aviso directamente (por ejemplo, las personas que viven en apartamentos, residencias para ancianos, escuelas y negocios). Puede hacerlo colocando este aviso en un lugar público o entregando copias en persona o por correo.

Este aviso le fue enviado por el sistema de agua _____ la fecha ____/_____/_____.

Formulario de certificación de la notificación al público del monitoreo anual de nitrato

(Esta sección debe ser llenada por el sistema de agua. La firma abajo indica que la notificación contiene todos los elementos requeridos.)

Complete los siguientes puntos (marque todo lo que aplica)

☐ El aviso fue enviado por correo a todos los usuarios del sistema de agua el ____/_____/

☐ El aviso fue distribuido a mano a todos usuarios del sistema de agua el ____/_____/

☐ El aviso fue publicado en el periódico (adjunta la copia)

☐ Se colocó el aviso en _____ el ____/_____/
(**Solo con permiso del departamento**)

_____ _____ ____/_____/_____.
(Firma del dueño u operador) (Posición) (Fecha)

Envíe una copia de la notificación completa y la certificación a:

Denise Garrett, Lead and Copper Program Manager
Office of Drinking Water
PO Box 47822
Olympia, WA 98504-7822
FAX (360) 236-2252

NOTICE TO WATER SYSTEM USERS

COLIFORM MAJOR MONITORING VIOLATION

We, _____ Water System, I.D. _____, located in _____ County are required to monitor your drinking water for specific contaminants on a regular basis. Results of regular monitoring are an indicator of whether or not your drinking water meets health standards. During the month of _____ we did not monitor or test for coliform bacteria, and therefore cannot be sure of the quality of your drinking water during that time.

At this time:

☐ No action is required by the users.

☐ Our routine coliform sample required for the month of _____ has been collected and was found to show no presence of coliform bacteria.

☐ Samples will be collected in the future as required.

☐ Other information for customers:

For more information, contact _____ at ( )_____ or at _____.
(owner or operator) (phone number) (address)

Please share this information with all the other people who drink this water, especially those who may not have received this notice directly (for example, people in apartments, nursing homes, schools, and businesses.) You can do this by posting this notice in a public place or distributing copies by hand or mail.

This notice is sent to you by _____ Water System on ____/____/____

Coliform Major Monitoring Public Notice Certification Form
The purpose of this form (below) is to provide documentation to the department that public notice was distributed. Please check the appropriate box and fill in the date that the notice was distributed:

☐ Notice was mailed to all water customers on ____ / ____/____.

☐ Notice was hand delivered to all water customers on ___ / ___ /___.

☐ Notice was posted (*with department approval*) at:
_____ on ___ / ___ /____.

Washington State Department of Health
Division of Environmental Health
Office of Drinking Water

_____ _____ _____
Signature of owner or operator Position Date

If you need this publication in an alternate format, call (800) 525-0127. For TTY/TDD call (800) 833-6388.

Send copy of completed notification and certification to:

☐ Northwest Drinking Water
Department of Health
20435 72nd Ave S, Suite 200
Kent, WA 98032-2358
Phone: (253) 395-6750
Fax: (253) 395-6760

☐ Southwest Drinking Water
Department of Health
PO Box 47823
Olympia, WA 98504-7823
Phone: (360) 236-3030
Fax: (360) 664-8058

☐ Eastern Drinking Water
Department of Health
16201 E Indiana Ave, Suite 1500
Spokane Valley, WA 99216
Phone: (509) 329-2100
Fax: (509) 329-2104

IMPORTANT NOTICE ABOUT YOUR WATER SYSTEM
Coliform Maximum Contaminant Level (MCL) Exceeded: Non-acute MCL

The _____ water system, ID# _____ in _____ County routinely monitors for the presence of total coliform bacteria and in _____ this type of bacteria was detected. Although this incident was not an emergency, as our customer, you have a right to know what happened and what we did or are doing to correct the situation.

Coliforms are bacteria which are naturally present in the environment and are used as indicators that other, potentially-harmful, bacteria may be present. Coliforms were found in more samples than allowed and this was a warning of potential problems. The samples that showed the presence of coliform were further tested to see if other bacteria of greater concern, such as fecal coliform or *E.coli* were present. **None of these bacteria were found.**

You do not need to boil your water. People with severely compromised immune systems, infants, and some elderly may be at an increased risk. These people should seek advice from their health care provider.

What happened? What is the suspected or known source of contamination?

At this time:

☐ The problem is resolved. Additional samples collected were found to be free of coliform bacteria.
☐ We anticipate resolving the problem by ____ / ____ / ____.
☐ Other _____.

For more information, contact _____ at ( )____-_____ or at _____.
(owner or operator) (phone number) (address)

Please share this notice with all the other people who drink this water, especially those who may not have received this notice directly (for example, people in apartments, nursing homes, schools, and businesses). You can do this by posting this notice in a public place or distributing copies by hand or mail.

This notice is sent to you by _____ Date Distributed ____ / ____ / ____.

Coliform Non-acute Public Notice Certification Form

The purpose of this form (below) is to provide documentation to the department that public notice was distributed. Please check the appropriate box and fill in the date that the notice was distributed:

☐ Notice was mailed to all water customers on ____ / ____/____.
☐ Notice was hand delivered to all water customers on ___ / ___ /___.
☐ Notice was posted (*with department approval*) at:
_____ on ___ / ___ /____.

Washington State Department of Health
Division of Environmental Health
Office of Drinking Water

_____ _____ _____
Signature of owner or operator Position Date

If you need this publication in an alternate format, call (800) 525-0127. For TTY/TDD call (800) 833-6388.

Send copy of completed notification and certification to:

☐ Northwest Drinking Water
Department of Health
20435 72nd Ave S, Suite 200
Kent, WA 98032-2358
Phone: (253) 395-6750
Fax: (253) 395-6760

☐ Southwest Drinking Water
Department of Health
PO Box 47823
Olympia, WA 98504-7823
Phone: (360) 236-3030
Fax: (360) 664-8058

☐ Eastern Drinking Water
Department of Health
16201 E Indiana Ave, Suite 1500
Spokane Valley, WA 99216
Phone: (509) 329-2100
Fax: (509) 329-2104

AVISO IMPORTANTE ACERCA DEL SISTEMA DE SUMINISTRO DE AGUA

Las bacterias coliformes rebasaron el Nivel Máximo de Contaminación: NMC no agudo

El sistema de suministro de agua _____, número (ID#) _____ en el condado de _____ monitorea rutinariamente la presencia de bacterias coliformes totales. En la fecha _____, se encontró este tipo de bacteria. Aunque este incidente no es considerado una emergencia, como consumidor, Usted tiene el derecho a saber que pasó y que se ha hecho o se esta haciendo para corregir esta situación.

Las bacterias coliformes se encuentran naturalmente en el medio ambiente y se usan como indicador de la posible presencia de otras bacterias que pueden causar daño a la salud. En las muestras tomadas, las bacterias se encontraron en mayor número que el permitido y esto es una indicación de posibles problemas. Las muestras con bacterias coliformes se analizaron con más detalle en el laboratorio para ver si bacterias coliformes fecales o E. Coli pudieran también haber estado presentes. Estas bacterias causan daño a la salud de las personas. **No se encontró ninguna de estas bacterias.**

No es necesario que usted hierva el agua. Personas con un sistema inmunológico severamente comprometido, los recién nacidos y algunas personas de edad avanzada pueden tener mas riesgo de salud y deberían llamar a algún personal médico para mayor información.

¿Qué fue lo que pasó? ¿Cuál es la fuente de contaminación de la que se sabe o sospecha?

En este momento:

- ☐ El problema esta resuelto. En muestras adicionales que se colectaron no se encontraron bacterias coliformes.
- ☐ Anticipamos resolver el problema el día ____/____/____.
- ☐ Otro _____.

Para mayor información comuníquese con _____ al teléfono ( ) _____-__ _____ o con

_____	_____	_____
(dueño u operador)	(teléfono)	(dirección)

Pase esta información a todas las personas pudieran tomar agua de este suministro, especialmente aquellas personas que no hayan recibido este aviso (por ejemplo, personas que vivan en apartamentos, asilos de ancianos, escuelas y negocios.) Usted puede hacer esto colocando este aviso en un lugar público donde se pueda leer claramente o distribuyendo copias en persona o enviándolas por correo.

Este aviso es enviado a Usted por el Sistema de Suministro de Agua_____ fecha ___/___/____.

AVISO A LOS USUARIOS DEL SISTEMA DE AGUA

VIOLACIÓN DEL MONITOREO DE LOS SUBPRODUCTOS DE LA DESINFECCIÓN

Nosotros, el sistema del agua _____, con numero de identificación_____, situado en el condado de _____ estamos obligados a monitorear regularmente su agua potable por contaminantes específicos. Los resultados del monitoreo indican si su agua potable cumple o no con las normas de salud. Durante ☐ el(los) mes(es) de _____ o ☐ los cuartos de _____ en el año de _____ no realizamos monitoreo ni pruebas del agua para ☐ el total de los trihalometanos, ☐ los haloácidos, o ☐ bromatos y por lo tanto no podemos asegurar la calidad de su agua potable durante ese tiempo.

En este momento:

☐ No se requiere ninguna acción de los usuarios.

☐ Colectaremos las muestras en el futuro según la norma.

☐ Otra información para los usuarios:

Por más información, contacte a _____ al (____)_____o en_____.
(Dueño / operador) (Número de teléfono) (Dirección)

Por favor comparte esta información con otras personas que pudieran tomar agua de este sistema, especialmente con aquellos que no hayan recibido este aviso directamente (por ejemplo, las personas que viven en apartamentos, hospicios para ancianos, escuelas y negocios). Puede hacerlo colocando este aviso en un lugar público o entregando copias en persona o por correo.

Este aviso le fue enviado por el sistema de agua _____ el __/__/____.

Formulario de certificación de la notificación al público del monitoreo de los subproductos de la desinfección
El propósito de este formulario (abajo) es documentar para el departamento que el aviso público fue distribuido. Marque por favor la caja apropiada y complete la fecha que el aviso fue distribuido: (Esta sección debe ser llenada por el sistema de agua):

☐ El aviso fue enviado por correo a todos los usuarios del sistema de agua el ____/____/____.

☐ El aviso fue distribuido a mano a todos usuarios del sistema de agua el ____/____/____.

☐ Se colocó el aviso (solo con permiso del departamento) en:

_____ el ____/____/____.

Washington State Department of Health
Division of Environmental Health
Office of Drinking Water

_____ _____ ____/____/____
(Firma del dueño u operador) (Posición) (Fecha)

Si usted necesita esta publicación en un formato diferente, llame al (800) 525-0127. Para TTY/TDD, llame al (800) 833-6388.

Envíe una copia de la notificación completa y la certificación a*:*

☐ Northwest Drinking Water	☐ Southwest Drinking Water	☐ Eastern Drinking Water
Department of Health	Department of Health	Department of Health
20435 72nd Ave S, Suite 200	PO Box 47823	16201 E Indiana Ave, Suite 1500
Kent, WA 98032-2358	Olympia, WA 98504-7823	Spokane Valley, WA 99216
Phone: (253) 395-6750	Phone: (360) 236-3030	Phone: (509) 329-2100
Fax: (253) 395-6760	Fax: (360) 664-8058	Fax: (509) 329-2104

NOTICE TO WATER SYSTEM USERS

DISINFECTION BYPRODUCTS MONITORING VIOLATION

We, _____ Water System, I.D. _____, located in _____ County are required to monitor your drinking water for specific contaminants on a regular basis Results of regular monitoring are an indicator of whether or not your drinking water meets health standards. During the ☐ month(s) of _____ _____ or ☐ quarter(s) _____ in the year of _____ we did not monitor or test for ☐ Total Trihalomethanes, ☐ Haloacetic Acids, or ☐ Bromate and therefore cannot be sure of the quality of your drinking water during that time.

At this time:

☐ No action is required by the users.

☐ Samples will be collected in the future as required.

☐ Other information for customers:

For more information, contact _____ at ( )_____ or at _____.
(owner or operator) (phone number) (address)

Please share this information with all the other people who drink this water, especially those who may not have received this notice directly (for example, people in apartments, nursing homes, schools, and businesses.) You can do this by posting this notice in a public place or distributing copies by hand or mail.

This notice is sent to you by _____ Water System on ____/____/____

Disinfection Byproducts Monitoring Public Notice Certification Form
The purpose of this form (below) is to provide documentation to the department that public notice was distributed. Please check the appropriate box and fill in the date that the notice was distributed:

☐ Notice was mailed to all water customers on ____ / ____/____.

☐ Notice was hand delivered to all water customers on ___ / ___ /___.

☐ Notice was posted (*with department approval*) at:
_____ on ___ / ___ /____.

Washington State Department of Health
Division of Environmental Health
Office of Drinking Water

_____	_____	_____
Signature of owner or operator	Position	Date

If you need this publication in an alternate format, call (800) 525-0127. For TTY/TDD call (800) 833-6388.

Send copy of completed notification and certification to:

☐ Northwest Drinking Water	☐ Southwest Drinking Water	☐ Eastern Drinking Water
Department of Health	Department of Health	Department of Health
20435 72nd Ave S, Suite 200	PO Box 47823	16201 E Indiana Ave, Suite 1500
Kent, WA 98032-2358	Olympia, WA 98504-7823	Spokane Valley, WA 99216
Phone: (253) 395-6750	Phone: (360) 236-3030	Phone: (509) 329-2100
Fax: (253) 395-6760	Fax: (360) 664-8058	Fax: (509) 329-2104

NOTICE TO WATER SYSTEM USERS
LEAD AND COPPER INITIAL MONITORING VIOLATION

We, _____ Water System, I.D. _____, located in _____ County are required to monitor your drinking water for specific contaminants on a regular basis. Results of regular monitoring are an indicator of whether or not your drinking water meets health standards. In the initial monitoring period of _____ to _____ _____, we did not meet our monitoring requirements for lead and copper, and therefore cannot be sure of the quality of your drinking water at that time. At this time:

☐ No action is required by the users.

☐ Our required lead and copper samples have currently been collected.

☐ Samples will be collected in the future as required.

☐ Other information for customers:

For more information, please contact _____ at ( )___-_____ or at _____.
(owner or operator) (phone number) (address)

Please share this information with all the other people who drink this water, especially those who may not have received this notice directly (for example, people in apartments, nursing homes, schools, and businesses.) You can do this by posting this notice in a public place or distributing copies by hand or mail.

This notice is sent to you by _____ Water System on __/__/__

Lead & Copper Initial Monitoring Public Notice Certification Form
This section must be completed by Water System. Signature below indicates notice contained all required elements.

Complete the following items (check all that apply):

Washington State Department of Health
Division of Environmental Health
Office of Drinking Water

☐ Notice mailed to all water customers on ____ / ____/____.

☐ Notice hand delivered to all water customers on ___ / ___ /___.

☐ Notice published in newspaper (attach copy)

☐ Notice posted at _____ on ___ / ___ /____.
(***By Department Approval Only***)

_____ _____ _____
Signature of owner or operator Position Date

Send copy of completed notification and certification to:
Denise Garrett, Lead and Copper Program Manager
Office of Drinking Water
PO Box 47822
Olympia, WA 98504-7822
FAX (360) 236-2252

If you need this publication in an alternate format, call (800) 525-0127. For TTY/TDD, call (800) 833-6388.

NOTICE TO WATER SYSTEM USERS

LEAD AND COPPER MONITORING VIOLATION

We, _____ Water System, I.D. _____, located in _____ County are required to monitor your drinking water for specific contaminants on a regular basis. Results of regular monitoring are an indicator of whether or not your drinking water meets health standards. In _____ we did not meet our monitoring requirements for lead and copper, and therefore cannot be sure of the quality of your drinking water at that time.

At this time:

- ☐ No action is required by the users.
- ☐ Our required lead and copper samples have been collected for this monitoring period.
- ☐ Samples will be collected in the future as required.
- ☐ Other information for customers:

For more information, please contact _____ at ( )____-_____ or at _____.
(owner or operator) (phone number) (address)

Please share this information with all the other people who drink this water, especially those who may not have received this notice directly (for example, people in apartments, nursing homes, schools, and businesses.) You can do this by posting this notice in a public place or distributing copies by hand or mail.

This notice is sent to you by _____ Water System on __/__/__

Lead & Copper Monitoring Public Notice Certification Form
This section must be completed by the water system. Signature below indicates notice contained all required elements.

Complete the following items (check all that apply):

Washington State Department of Health
Division of Environmental Health
Office of Drinking Water

- ❑ Notice mailed to all water customers on ____ / ____/____.
- ❑ Notice hand delivered to all water customers on ___ / ___ /___.
- ❑ Notice published in newspaper (attach copy)
- ❑ Notice posted at _____ on ___ / ___ /____.
  (***By Department Approval Only***)

_____ _____ _____
Signature of owner or operator Position Date

Send copy of completed notification and certification to:

Denise Garrett, Lead and Copper Program Manager
Office of Drinking Water
PO Box 47822
Olympia, WA 98504-7822
FAX (360)236-2252

DOH Form 331-461 (Updated 06/11)

If you need this publication in an alternate format, call (800) 525-0127. For TTY/TDD, call (800) 833-6388.

AVISO PARA LOS USUARIOS DEL SISTEMA DE AGUA

VIOLACIÓN DEL MONITOREO DE PLOMO Y COBRE

Nosotros, el sistema de agua _____ , con número de identificación (I.D#) _____, ubicado en el condado de _____, regularmente debemos monitorear contaminantes específicos en el agua que usted toma. Los resultados del monitoreo son un indicador para comprobar si el agua que usted toma cumple con los estándares de salud. En _____ no cumplimos con el requisito de monitorear el plomo y el cobre, y por lo tanto no podemos estar seguros de la calidad del agua que usted tomó en esa fecha.

En este momento:

☐ Ninguna acción se requiere de parte de los usuarios.

☐ Nuestras muestras de plomo y cobre requeridas han sido tomadas para este periodo de monitoreo.

☐ Las muestras serán tomadas en el futuro como se requiere.

☐ Otra información para los usuarios:

Para mayor información comuníquese con _____ al teléfono ( ) _____-__ _____ o con

_____	_____	_____
(dueño u operador)	(teléfono)	(dirección)

Pase esta información a todas las personas que pudieran tomar agua de este suministro, especialmente aquellas personas que no hayan recibido este aviso (por ejemplo, personas que vivan en apartamentos, asilos de ancianos, escuelas y negocios.) Usted puede hacerlo colocando este aviso en un lugar público donde se pueda leer claramente o distribuyendo copias en persona o enviándolas por correo.

Este aviso es enviado a usted por el Sistema de Suministro de Agua_____ fecha ___/___/____.

Si usted necesita esta publicación en formatos alternativos llame al (800) 825-0127. Para TTY/TDD, llame al (800) 833-6388.

NOTICE TO WATER SYSTEM USERS

MONTHLY BROMATE MONITORING VIOLATION FORM

We, _____ Water System, I.D. _____, located in _____County are required to monitor your drinking water for specific contaminants on a regular basis. Results of regular monitoring are an indicator of whether or not your drinking water meets health standards. During the month(s) of _____, we did not monitor or test for the disinfection by-product bromate, and therefore cannot be sure of the quality of your drinking water during that time.

At this time:

☐ No action is required by the users.

☐ Our routine monthly bromate sample(s) have been taken for _____ *(time period)*.

☐ Samples will be collected in the future as required.

☐ Other information for customers:

For more information, please contact _____ at ( )___-_____ or at _____.
(owner or operator) (phone number) (address)

Please share this information with all the other people who drink this water, especially those who may not have received this notice directly (for example, people in apartments, nursing homes, schools, and businesses.) You can do this by posting this notice in a public place or distributing copies by hand or mail.

This notice is sent to you by _____ Water System on __/__/__

Monthly Bromate Monitoring Public Notice Certification Form

(This section must be completed by Water System. Signature below indicates notice contained all required elements.)

Complete the following items (check all that apply):

Washington State Department of Health
Division of Environmental Health
Office of Drinking Water

☐ Notice mailed to all water customers on ____ / ____/____.

☐ Notice hand delivered to all water customers on ___ / ___ /___.

☐ Notice published in newspaper (attach copy)

☐ Notice posted at _____ on ___ / ___ / ____.
(***By Department Approval Only***)

_____ _____ _____
Signature of owner or operator Position Date

The Department of Health is an equal opportunity agency. For persons with disabilities, this form is available on request in other formats. To submit a request, please call 1-800-525-0127 (TTY 1-800-833-6388).

Send copy of completed notification and certification to:
Office of Drinking Water, Water System Support Section, PO Box 47822, Olympia WA 985047822 fax (360) 236-2252

DOH Form #331-394 (02/08)

Washington State Department of Health
Division of Environmental Health
Office of Drinking Water

PUBLIC NOTICE CERTIFICATION FORM
NITRATE MCL VIOLATION

Within 10 days of notifying your customers, you are required to send to your Regional Office of Drinking Water this completed form and a copy of each type of notice you distributed (hand-delivered notices, press releases, newspaper articles, etc.). This form certifies that you have met all the public notification requirements. If the chemical contamination remains for more than three months, you must notify your water users again and provide another Public Notice Certification Form to the Department of Health.

With this certification, you are also stating that you will meet future requirements for notifying new billing units of the violation or situation.

Water System: _____ID #: _____County:_____

Violation Date:_____ / _____ / _____ Violation Type:_____

This public water system certifies that public notice has been given to water users following state and federal requirements for delivery, content, and deadlines.

Complete the following items:

Yes No

☐ ☐ Distribution was completed on ___ / ___ /____. Check all that apply:
- ☐ Hand delivery,
- ☐ Press release (TV, radio, newspaper, etc.),
- ☐ Posting at_____ (by DOH approval only),
- ☐ Other _____ (by DOH approval only).

☐ ☐ Were the water users notified within 24 hours?

_____ _____ _____
Signature of owner or operator Position Date

Northwest Regional Office:
20435 72nd Ave. S., Suite 200,
Kent WA 98032
Main Office: (253) 395-6750
Fax: (253) 395-6760

Area of Coverage: Island, King, Pierce, San Juan, Skagit, Snohomish, and Whatcom Counties.

Southwest Regional Office:
243 Israel Road SE, Tumwater
PO Box 47823, Olympia WA 98504
Main Office: (360) 236-3030
Fax (360) 664-8058

Area of Coverage: Clallam, Clarks, Cowlitz, Grays Harbor, Jefferson, Kitsap, Lewis, Mason, Pacific, Skamania, Thurston, and Wahkiakum Counties.

Eastern Regional Office:
16201 East Indiana Ave., Suite 1500,
Spokane Valley WA 99216
Main Office: (509) 329-2100
Fax: (509) 329-2104

Area of Coverage: Adams, Asotin, Benton, Chelan, Columbia, Douglas, Ferry, Franklin, Garfield, Grant, Kittitas, Klickitat, Lincoln, Okanogan, Pend Oreille, Spokane, Stevens, Walla Walla, Whitman, and Yakima Counties.

The Department of Health is an equal opportunity agency. For persons with disabilities, this form is available on request in other formats. To submit a request, please call 1-800-525-0127 (TTY 1-800-833-6388).

NOTICE TO WATER SYSTEM USERS
QUARTERLY NITRATE MONITORING VIOLATION FORM

We, _____Water System, I.D. _____, located in _____ County are required to monitor your drinking water for specific contaminants on a regular basis. Results of regular monitoring are an indicator of whether or not your drinking water meets health standards. We are required to monitor for nitrates on a quarterly basis. We have failed to meet the monitoring requirements for nitrate for the _____ quarter(s) of _____ (year). We cannot be sure of the quality of your drinking water during that time. At this time:

☐ No action is required by the users.

☐ Our current quarterly nitrate samples have been collected.

☐ Samples will be collected in the future as required.

☐ Other information for customers:

For more information, please contact _____ at ( )___-_____ or at _____.
(owner or operator) (phone number) (address)

Please share this information with all the other people who drink this water, especially those who may not have received this notice directly (for example, people in apartments, nursing homes, schools, and businesses.) You can do this by posting this notice in a public place or distributing copies by hand or mail.

This notice is sent to you by _____ Water System on __/__/__

Quarterly Nitrate Monitoring Public Notice Certification Form
(This section to be completed by the Water System. Signature below indicates notice contained all required elements.)

Complete the following items (check all that apply):

Washington State Department of Health
Division of Environmental Health
Office of Drinking Water

☐ Notice mailed to all water customers on ____ / ____/____

☐ Notice hand-delivered to all water customers on ___ / ___ /___

☐ Notice published in newspaper (attach copy)

☐ Notice posted at _____ on ___ / ___ /____
(***By Department Approval Only***)

_____ _____ _____
Signature of owner or operator Position Date

Send copy of completed notification and certification to:
Denise Garrett, Lead and Copper Program Manager
Office of Drinking Water
PO Box 47822
Olympia, WA 98504-7822
FAX (360) 236-2252

If you need this publication in an alternate format, call (800) 525-0127. For TTY/TDD, call (800) 833-6388.

NOTICE TO WATER SYSTEM USERS

QUARTERLY TOTAL TRIHALOMETHANE (TTHM)/HALOACETIC ACIDS (HAA5) MONITORING VIOLATION FORM

We, _____ Water System, I.D. _____, located in _____County are required to monitor your drinking water for specific contaminants on a regular basis. Results of regular monitoring are an indicator of whether or not your drinking water meets health standards. During the following quarters: _____, we did not monitor or test for the disinfection by-products TTHM and HAA5, and therefore cannot be sure of the quality of your drinking water during that time.

At this time:

☐ No action is required by the users.

☐ Our routine quarterly TTHM/HAA5 samples have been taken for _____ *(time period)*.

☐ Samples will be collected in the future as required.

☐ Other information for customers:

For more information, please contact _____ at ( )___-_____ or at _____.
(owner or operator) (phone number) (address)

Please share this information with all the other people who drink this water, especially those who may not have received this notice directly (for example, people in apartments, nursing homes, schools, and businesses.) You can do this by posting this notice in a public place or distributing copies by hand or mail.

This notice is sent to you by _____ Water System on __/__/__

Quarterly TTHM/HAA5 Monitoring Public Notice Certification Form

(This section must be completed by Water System. Signature below indicates notice contained all required elements.)

Complete the following items (check all that apply):

☐ Notice mailed to all water customers on ____ / ____/____.

☐ Notice hand delivered to all water customers on ___ / ___ /___.

☐ Notice published in newspaper (attach copy)

☐ Notice posted at _____ on ___ / ___ / ____.

(***By Department Approval Only***)

Washington State Department of Health
Division of Environmental Health
Office of Drinking Water

_____ _____ _____
Signature of owner or operator Position Date

The Department of Health is an equal opportunity agency. For persons with disabilities, this form is available on request in other formats. To submit a request, please call 1-800-525-0127 (TTY 1-800-833-6388).

Send copy of completed notification and certification to:
Office of Drinking Water, Water System Support Section, PO Box 47822, Olympia WA 985047822 fax (360) 236-2252

DOH Form #331-395 (02/08)

NOTICE TO WATER SYSTEM USERS
Reliably & Consistently Under the Maximum Contaminant Level (MCL)
ANNUAL NITRATE MONITORING VIOLATION FORM

We, _____ Water System, I.D. _____, located in _____County are required to monitor your drinking water for specific contaminants on a regular basis. Results of regular monitoring are an indicator of whether or not your drinking water meets health standards. We are required to collect a nitrate sample for Source #____ each year, between the months of _____ and _____. During _____, we did not monitor or test for nitrate and therefore cannot be sure of the quality of your drinking water during that time. At this time:

- ☐ No action is required by the users.
- ☐ Our routine nitrate sample required to be collected between _____ *and* _____ *(current year)* has been collected.
- ☐ Samples will be collected in the future as required.
- ☐ Other information for customers:

For more information, please contact _____ at ( )___-_____ or at _____.
(owner or operator) (phone number) (address)

Please share this information with all the other people who drink this water, especially those who may not have received this notice directly (for example, people in apartments, nursing homes, schools, and businesses.) You can do this by posting this notice in a public place or distributing copies by hand or mail.

This notice is sent to you by _____ Water System on __/__/__

R & C Under the MCL Annual Nitrate Monitoring Public Notice Certification Form

(This section must be completed by the Water System. A signature below indicates the notice contained all required elements.)

Complete the following items (check all that apply):

Washington State Department of Health
Division of Environmental Health
Office of Drinking Water

☐ Notice mailed to all water customers on ____ / ____/____

☐ Notice hand-delivered to all water customers on ___ / ___ /___

☐ Notice published in newspaper (attach copy)

☐ Notice posted at _____ on ___ / ___ / ____
(***By Department Approval Only***)

_____ _____ _____
Signature of owner or operator Position Date

Send a copy of completed notification and certification to:

Denise Garrett, Lead and Copper Program Manager
Office of Drinking Water
PO Box 47822
Olympia, WA 98504-7822
FAX (360) 236-2252

If you need this publication in an alternate format, call (800) 525-0127. For TTY/TDD, call (800) 833-6388.

APPENDIX R

Water Ordinances

CITY OF MARYSVILLE
Marysville, Washington

ORDINANCE NO. 2975

AN ORDINANCE OF THE CITY OF MARYSVILLE, WASHINGTON INCREASING WATER, SEWER, AND SURFACE WATER UTILITY RATES AND AMENDING SECTIONS, 14.07.060, 14.07.070, AND 14.19.050 OF THE MARYSVILLE MUNICIPAL CODE AS AUTHORIZED UNDER MMC SECTION 14.07.075.

WHEREAS, the City is authorized under Chapter 35.92 RCW to establish and maintain water and sewer systems and establish rates for those services; and

WHEREAS, the City is authorized under MMC Chapter 14.19 RCW, 35.A.12.190, RCW 35.A.11.020, Chapter 90.48 RCW and the Federal Clean Water Act to manage and set rates for Municipal storm water; and

WHEREAS, pursuant to ordinances codified in part at Chapter 14.07.060, 14.07.070 and 14.19.050 of the Marysville Municipal code, the City established water, sewer, and surface water rates for properties served by the City of Marysville water, sewer, and surface water utility; and

WHEREAS, using generally accepted rate setting techniques, and with the assistance of a qualified consultant, City staff formulated recommended water, sewer, and surface water rates; and

WHEREAS, on January 25, 2010 the Marysville City Council held a public hearing, took public testimony, fully considered the staff recommendation of proposed water, sewer, and surface water rates, and approved Staff recommendation regarding rate adjustments including establishment of storm water connection charge, restructuring of water rate to inclined block volume rate, elimination of overage rate, elimination of summer surcharge, sewer rate increase, and surface water rate increase; and

WHEREAS, the Marysville City Council, during the 2015/2016 Biennial Budget processes and adoption, finds that the recommended 2% increase of water, sewer, and surface water rates, per MMC 14.07.075(1) to be fair, just and reasonable;

NOW, THEREFORE, THE CITY COUNCIL OF THE CITY OF MARYSVILLE, WASHINGTON DO ORDAIN AS FOLLOWS:

Section 1. Section 14.07.060 of the Marysville Municipal Code is hereby amended to

read as follows:

14.07.060 Water rates.

(1) Definitions.

(a) "Water rates," as used herein, shall refer to the charge assessed by the city for all water consumed or used on property connected to the city water system. The rates shall be based upon the quantity of water passing through the water meter during each billing period.

(b) The normal "billing period" shall be a two-month cycle and shall be that period falling between two consecutive meter read dates. Charges for periods of less than two months shall be prorated both as to minimum charge and as to consumption; provided, however, the city may, at its discretion, elect to use a monthly billing period for selected accounts. If a monthly billing period is used, the consumption allowance and rate shall be one-half that set forth in the bimonthly rate schedule.

(c) Billing Increments. Charges for water shall be computed on the nearest 1,000 gallons of consumption.

(d) "City rates" are those which shall be charged to all properties connected to the water system which are located within the city limits of Marysville.

(e) "CWSP rates" are those which shall be charged to all properties connected to the water system which are located outside the city limits of Marysville but are within the coordinated water system planning boundary.

(f) "OCWSP rates" are those which shall be charged to all properties connected to the water system which are located outside the city's coordinated water system planning boundary.

(g) "Multiple residential units" shall be defined as attached dwelling units which share a common water meter, including duplexes, townhouses, apartments and condominiums, and shall be defined as including mobile home parks.

(h) "Single-family residential units" shall refer exclusively to detached single-family dwelling units.

(2) Bi Monthly Minimum Water Rates. Minimum charges for each billing period, and consumption allowances for such minimums are established as follows:

Effective January 1, 2014:

Meter Size Effective 1/1/14 Bi-Monthly Rates	AWWA Meter Factor	City Rate	Rural Rate	Outside UGA Rate
Tier = factor *base rate				
Multiple Residential Units (Per Unit)	N/A	~~$21.36~~	~~$32.05~~	~~$42.72~~
5/8"	1	~~$21.36~~	~~$32.05~~	~~$42.72~~
3/4"	1.5	~~$32.05~~	~~$48.05~~	~~$64.07~~
1"	2.5	~~$53.41~~	~~$80.09~~	~~$106.78~~
1-1/2"	5	~~$106.78~~	~~$160.18~~	~~$213.57~~
2"	8	~~$170.85~~	~~$256.29~~	~~$341.70~~
3"	16	~~$341.70~~	~~$512.55~~	~~$683.41~~
4"	25	~~$533.92~~	~~$800.88~~	~~$1,067.83~~
6"	50	~~$1,067.83~~	~~$1,601.73~~	~~$2,135.64~~
8"	80	~~$1,708.51~~	~~$2,562.77~~	~~$3,417.03~~
10"	115	~~$2,455.99~~	~~$3,683.99~~	~~$4,911.97~~
12"	200	~~$4,271.28~~	~~$6,406.92~~	~~$8,542.56~~

Residential & Multi-Family Effective 1/1/14 Bi-Monthly Rates	City Rate	Rural Rate	Outside UGA Rate
Volume Tiers (1,000 gal)			
0 to 6	~~$1.15~~	~~$1.72~~	~~$2.30~~
7 to 20	~~$4.02~~	~~$6.04~~	~~$8.05~~
21 to 30	~~$4.59~~	~~$6.89~~	~~$9.20~~
31 and higher	~~$5.17~~	~~$7.75~~	~~$10.34~~

Commercial Effective 1/1/14 Bi-Monthly Rates	City Rate	Rural Rate	Outside UGA Rate
Volume Tiers (1,000 gal)			
0 to 6	~~$1.15~~	~~$1.72~~	~~$2.30~~
7 and higher	~~$2.88~~	~~$4.31~~	~~$5.74~~

Effective January 1, 2015:

Meter Size Effective 1/1/15 Bi-Monthly Rates	AWWA Meter Factor	City Rate	Rural Rate	Outside UGA Rate
Tier = factor *base rate				
Multiple Residential Units (Per Unit)	N/A	$21.79	$32.69	$43.57
5/8"	1	$21.79	$32.69	$43.57
3/4"	1.5	$32.69	$49.01	$65.35
1"	2.5	$54.48	$81.69	$108.92
1-1/2"	5	$108.92	$163.38	$217.84
2"	8	$174.27	$261.41	$348.53
3"	16	$348.53	$522.80	$697.08
4"	25	$544.60	$816.90	$1,089.18
6"	50	$1,089.18	$1,633.76	$2,178.35
8"	80	$1,742.68	$2,614.03	$3,485.37
10"	115	$2,505.11	$3,757.66	$5,010.21
12"	200	$4,356.71	$6,535.05	$8,713.41

Residential & Multi-Family Effective 1/1/15 Bi-Monthly Rates	City Rate	Rural Rate	Outside UGA Rate
Volume Tiers (1,000 gal)			
0 to 6	$1.18	$1.76	$2.34
7 to 20	$4.10	$6.16	$8.21
21 to 30	$4.68	$7.02	$9.38
31 and higher	$5.27	$7.91	$10.55

Commercial Effective 1/1/15 Bi-Monthly Rates	City Rate	Rural Rate	Outside UGA Rate
Volume Tiers (1,000 gal)			
0 to 6	$1.18	$1.76	$2.34
7 and higher	$2.93	$4.40	$5.86

Effective January 1, 2016:

Meter Size Effective 1/1/16 Bi-Monthly Rates	AWWA Meter Factor	City Rate	Rural Rate	Outside UGA Rate
Tier = factor *base rate				
Multiple Residential Units (Per Unit)	N/A	$22.22	$33.34	$44.44
5/8"	1	$22.22	$33.34	$44.44
3/4"	1.5	$33.34	$49.99	$66.65
1"	2.5	$55.56	$83.33	$111.10
1-1/2"	5	$111.10	$166.65	$222.20
2"	8	$177.75	$266.64	$355.50
3"	16	$355.50	$533.26	$711.02
4"	25	$555.49	$833.24	$1,110.97
6"	50	$1,110.97	$1,666.44	$2,221.91
8"	80	$1,777.53	$2,666.31	$3,555.08
10"	115	$2,555.21	$3,832.82	$5,110.42
12"	200	$4,443.84	$6,665.76	$8,887.68

Residential & Multi-Family Effective 1/1/16 Bi-Monthly Rates	City Rate	Rural Rate	Outside UGA Rate
Volume Tiers (1,000 gal)			
0 to 6	$1.20	$1.79	$2.39
7 to 20	$4.18	$6.28	$8.37
21 to 30	$4.78	$7.16	$9.57
31 and higher	$5.38	$8.07	$10.76

Commercial Effective 1/1/16 Bi-Monthly Rates	City Rate	Rural Rate	Outside UGA Rate
Volume Tiers (1,000 gal)			
0 to 6	$1.20	$1.79	$2.39
7 and higher	$2.99	$4.49	$5.97

(3) Calculation of Water Bill for Multiple Residential Units. In calculating the water bill for multiple residential units, the total number of dwelling units served by a water connection shall be divided into the water consumption for each billing period, expressed in gallons, to determine the average consumption per dwelling unit. The water rates shall be based upon the average consumption per unit during the billing period multiplied by the total number of units.

(4) Calculation of Water Bill for Mobile Home Parks. The total water bill for mobile home parks shall be calculated by applying the rate schedule to the total number of pads or mobile home sites on the premises which are in a condition ready for occupancy, regardless of whether the same are occupied during the billing period or not; provided, that for the first 24 months after a mobile home park, or a new addition thereto, is opened and connected to city utilities, its water bill shall be calculated by applying the rates only to such pads or mobile home sites as are actually occupied by mobile homes during each billing period; provided, however, for mobile home parks whose utility meter with the city was first activated less than three years preceding June 9, 1997, the effective date of Ordinance 2130, and for which billing on all pads or mobile home sites has occurred for less than two years preceding June 9, 1997, such mobile home parks shall be granted an additional 12 months from June 9, 1997, to pay only for such pads or mobile home sites which are actually occupied during each billing period; provided, further, that all fees, charges and rates paid by such mobile home parks to the city under prior provisions of this subsection and MMC 14.07.070(4) as such subsections originally read or as subsequently amended, shall be nonrefundable notwithstanding the provisions of this subsection.

(5) Private Fire Protection Rates. Private fire protection rates for properties inside or outside of the corporate limits of the city shall be as follows:

Effective January 1, 2014

(a) Private hydrants, each: $~~41.22~~ per year;
(b) Wet standpipe systems: $~~41.22~~ per year;
(c) Dry standpipe systems: None;
(d) Automatic sprinkler systems:

1. Each owner of an automatic sprinkler system shall be charged a monthly rate based upon the size of the water service line that serves the system. The following are the bimonthly rates:

Size of Line	Bimonthly Charge
2-inch	$~~44.83~~
3-inch	$~~55.18~~
4-inch	$~~67.79~~
6-inch	$~~85.03~~
8-inch	$~~111.50~~
10-inch	$~~140.21~~
12-inch	$~~161.95~~

Effective January 1, 2015

(a) Private hydrants, each: $42.04 per year;
(b) Wet standpipe systems: $42.04 per year;
(c) Dry standpipe systems: None;
(d) Automatic sprinkler systems:

1. Each owner of an automatic sprinkler system shall be charged a monthly rate based upon the size of the water service line that serves the system. The following are the bimonthly rates:

Size of Line	Bimonthly Charge
2-inch	$45.73
3-inch	$56.28
4-inch	$69.15
6-inch	$86.73
8-inch	$113.73
10-inch	$143.01
12-inch	$165.19

Effective January 1, 2016

(a) Private hydrants, each: $42.88 per year;
(b) Wet standpipe systems: $42.88 per year;
(c) Dry standpipe systems: None;
(d) Automatic sprinkler systems:

1. Each owner of an automatic sprinkler system shall be charged a monthly rate based upon the size of the water service line that serves the system. The following are the bimonthly rates:

Size of Line	Bimonthly Charge
2-inch	$46.64
3-inch	$57.41
4-inch	$70.53
6-inch	$88.46
8-inch	$116.00
10-inch	$145.87
12-inch	$168.49

2. As of 1/1/2010 automatic sprinkler systems without a separate meter and where the line is under 2 inches, will become part of the minimum water rate as a result of the rate restructuring.

(6) Reduced Utility Charges in Special Cases. Upon application by a utility customer, the

Chief Administrative Officer or designee shall have the discretion to make reasonable and equitable reduction in utility accounts, on a case-by-case basis, in the following circumstances:

(a) If a private water line, valve, fixture, or other appurtenance is verified to be leaking as a result of accidental damage or natural deterioration of the same, and not as a result of abuse or willful neglect, the water bill for the subject property during the period of the leak may be reasonably and equitably reduced; provided, that a customer shall be required to pay the base rate plus at least 50 percent of the applicable overage rate for all water which was lost by reason of the leak. The sewer bill for the subject property during the period of the leak may also be reasonably and equitably reduced to an amount not less than the bill charged for the corresponding period the previous year.

(9) Calculation of Water Bill for School Facilities. The city rate for water as set forth in subsection (2) of this section shall apply to all school facilities, whether such facilities are within the city limits or not. (Ord. 2181 §§ 1, 2, 1998; Ord. 2130 § 1, 1997; Ord. 2117 §§ 1, 2, 1997; Ord. 2109 § 1, 1996; Ord. 1840 § 1, 1991; Ord. 1809 § 1, 1990; Ord. 1789, 1990; Ord. 1434, 1985).

(10) Rate Relief. Low-income senior citizens and low-income disabled persons may be eligible for water and/or sewer rate relief pursuant to Chapter 3.63 MMC.

Section 2. Section 14.07.070 of the Marysville Municipal Code is hereby amended to read as follows:

14.07.070 Sewer rates.

(1) Definitions.

(a) The normal "billing period" shall be a two-month cycle and shall be that period falling between two consecutive water meter read dates. Charges for periods of less than two months shall be prorated; provided, however, the city may, at its discretion, elect to use a monthly billing period for selected accounts. If a monthly billing period is used, the rate shall be one-half that set forth in the bimonthly rate schedule.

(b) "City rates" are those which shall be charged to all properties connected to the sewer system which are located within the city limits of Marysville.

(c) "UGA rates" are those which shall be charged to all properties connected to the sewer system which are located outside of the city limits of Marysville but are within the urban growth area of the city of Marysville or that portion of the city of Arlington urban growth area which Marysville has agreed by interlocal agreement to provide service.

(d) "OUGA rates" are those which shall be charged to all properties connected to the sewer system which are located outside the Marysville city limits and outside area where "UGA rates" apply.

(e) "Single-family residences" shall refer exclusively to detached single-family dwelling units.

(f) "Multiple residential units" shall be defined as attached dwelling units which share a common water meter, including duplexes, townhouses, apartments, and condominiums, and shall be defined as including mobile home parks.

(g) "Commercial/industrial" refers to all nonresidential land uses which are not

specifically itemized or defined as being included within other classifications.

(h) "Satellite system rate" refers to that rate charged to the city by Lake Stevens Sewer District for the "overlap" area as described in the interlocal agreement between the parties dated April 22, 1999, plus an administrative overhead cost of 15 percent.

(2) Calculation of Commercial/Industrial Sewer Rates. Commercial/industrial sewer rates shall be based upon the quantity of water consumed or used on the premises during the billing period, as determined by the water meter reading and the strength of the discharge as measured by total suspended solids (TSS) and biochemical oxygen demand (BOD); provided, that a property owner may, at his own expense, arrange the plumbing on commercial premises so as to separate water which will be discharged into the sewer system from water which will not be so discharged, and a separate meter shall be installed to measure the amount of actual sewage discharged. In such a case the sewer rate shall be based only on the actual sewer use. The installation of such plumbing and meters must be inspected and approved by the city utility department.

Where a commercial property is connected to sewer service but not to water service, the city council shall determine the sewer rate to be charged on a case-by-case basis, using an estimated figure for water consumption.

(3) Sewer Rates. Bi Monthly Sewer rates are established as follows:

Effective January 1, 2014

Classification Effective 1/1/14 Bi-Monthly Rates	City Rate	Rural Rate	Outside UGA Rate
Single-family residential	~~$79.61~~	~~$119.43~~	~~$159.24~~
Multiple residential units per unit	~~$75.71~~	~~$113.56~~	~~$151.42~~
Hotels/Motels per unit	~~$55.77~~	~~$83.66~~	~~$111.54~~
Commercial Minimum	~~$79.61~~	~~$119.43~~	~~$159.24~~
Class 1 (31 to 100 mg/l) per 1,000 gallons	~~$1.67~~	~~$2.51~~	~~$3.34~~
Class 2 (101 to 200 mg/l) per 1,000 gallons	~~$2.30~~	~~$3.45~~	~~$4.59~~
Class 3 (201 to 300 mg/l) per 1,000 gallons	~~$2.94~~	~~$4.41~~	~~$5.88~~
Class 4 (301 to 400 mg/l) per 1,000 gallons	~~$3.57~~	~~$5.34~~	~~$7.14~~
Class 5 (401 to 500 mg/l) per 1,000 gallons	~~$4.20~~	~~$6.29~~	~~$8.39~~
Class 6 (501 to 600 mg/l) per 1,000 gallons	~~$6.10~~	~~$9.16~~	~~$12.19~~
Overnight camping			
Individual connections per unit	~~$55.77~~	~~$83.66~~	~~$111.54~~
Other connections each	~~$75.71~~	~~$113.56~~	~~$151.41~~
Schools			
Minimum	~~$79.61~~		
Per 1,000 Gallons	~~$4.53~~		
Restaurants w/o grease trap surcharge	~~$3.81~~		

Effective January 1, 2015

Classification Effective 1/1/15 Bi-Monthly Rates	City Rate	Rural Rate	Outside UGA Rate
Single-family residential	$81.20	$121.82	$162.43
Multiple residential units per unit	$77.23	$115.83	$154.45
Hotels/Motels per unit	$56.89	$85.33	$113.77
Commercial Minimum	$81.20	$121.82	$162.43
Class 1 (31 to 100 mg/l) per 1,000 gallons	$1.71	$2.56	$3.40
Class 2 (101 to 200 mg/l) per 1,000 gallons	$2.34	$3.52	$4.68
Class 3 (201 to 300 mg/l) per 1,000 gallons	$3.00	$4.49	$5.99
Class 4 (301 to 400 mg/l) per 1,000 gallons	$3.64	$5.45	$7.28
Class 5 (401 to 500 mg/l) per 1,000 gallons	$4.29	$6.42	$8.56
Class 6 (501 to 600 mg/l) per 1,000 gallons	$6.22	$9.34	$12.43
Overnight camping			
Individual connections per unit	$56.89	$85.33	$113.77
Other connections each	$77.23	$115.83	$154.44
Schools			
Minimum	$81.20	0	0
Per 1,000 Gallons	$4.62	0	0
Restaurants w/o grease trap surcharge	$3.89	0	0

Effective January 1, 2016

Classification Effective 1/1/16 Bi-Monthly Rates	City Rate	Rural Rate	Outside UGA Rate
Single-family residential	$82.83	$124.26	$165.68
Multiple residential units per unit	$78.77	$118.14	$157.54
Hotels/Motels per unit	$58.03	$87.04	$116.04
Commercial Minimum	$82.83	$124.26	$165.68
Class 1 (31 to 100 mg/l) per 1,000 gallons	$1.74	$2.61	$3.47
Class 2 (101 to 200 mg/l) per 1,000 gallons	$2.39	$3.59	$4.78
Class 3 (201 to 300 mg/l) per 1,000 gallons	$3.06	$4.58	$6.11
Class 4 (301 to 400 mg/l) per 1,000 gallons	$3.71	$5.56	$7.43
Class 5 (401 to 500 mg/l) per 1,000 gallons	$4.37	$6.55	$8.73
Class 6 (501 to 600 mg/l) per 1,000 gallons	$6.35	$9.53	$12.68
Overnight camping			
Individual connections per unit	$58.03	$87.04	$116.04
Other connections each	$78.77	$118.14	$157.53
Schools			
Minimum	$82.83	0	0
Per 1,000 Gallons	$4.71	0	0
Restaurants w/o grease trap surcharge	$3.97	0	0

(4) Calculation of Sewer Rates for Mobile Home Parks. The total sewer bill for mobile home parks shall be calculated by applying the rate schedule above to the total number of pads or mobile home sites on the premises which are in a condition ready for occupancy, regardless of whether the same are occupied during the billing period; provided, that for the first 24 months after a mobile home park, or a new addition thereto, is opened and connected to city utilities, the sewer bill shall be calculated by applying the rates only to such pads or mobile home sites as are actually occupied by mobile homes during each billing period; provided, however, for mobile home parks whose utility meter with the city was first activated less than three years preceding June 9, 1997, the effective date of Ordinance 2130, and for which billing on all pads or mobile home sites has occurred for less than two years preceding June 9, 1997, such mobile home parks shall be granted an additional 12 months from June 9, 1997, to pay only for such pads or mobile home sites which are actually occupied during each billing period; provided further, that all fees, charges and rates paid by such mobile home parks to the city under prior

provisions of this section and MMC 14.07.060, as such sections originally read or as subsequently amended, shall be nonrefundable notwithstanding the provisions of this subsection.

(5) Restaurants, for the purpose of sewer rates, shall be classified as Class 3 strength as described in subsection (3) of this section. Restaurants without approved grease traps, including those restaurants where a variance has been granted eliminating the necessity of a grease trap, shall be surcharged ~~effective January 1, 2014 $3.81 per 1,000~~ effective January 1, 2015 $3.89 per 1,000. Effective January 1, 2016 $3.97 per 1,000.

(6) Satellite System Rate. Notwithstanding any other rate established by this section, for that area defined as the satellite system area, the city shall charge the same rate as charged by Lake Stevens Sewer District plus an administrative fee of 15 percent. This rate shall be in effect for such properties until such time as the city's sewer collection system is constructed and sewer flows are diverted from the Lake Stevens Sewer District system to the city's sewer collection system.

(7) Calculation for Sewer Rates for Schools. Schools sewer rates shall be based upon the quantity of water consumed or used on the premises during the billing period, as determined by the water meter reading; provided; if the water service is supplied to a school by other than the City of Marysville water system, the school district shall notify the City billing department of the total consumption as billed by other such water purveyor. The city rate for sewer as set forth in subsection (3) of this section shall apply to all school facilities, whether such facilities are within the city limits or not and whether public or privately operated. (Ord. 2284 § 1, 1999; Ord. 2130 § 2, 1997; Ord. 2117 § 3, 1997; Ord. 2109 § 2, 1996; Ord. 1840 § 2, 1991; Ord. 1809 § 2, 1990; Ord. 1798, 1990; Ord. 1434, 1985).

(8) Rate relief. Low-income senior citizens and low-income disabled persons may be eligible for water and/or sewer rate relief pursuant to MMC 3.63.

Section 3. Section 14.19.050 of the Marysville Municipal Code is hereby amended to read as follows:

14.19.050 Surface water utility rates.

Surface water utility rates shall be based on a commonly accepted rate unit for surface water utilities, the equivalent residential unit (ERU). The ERU is used to relate a base rate fee charged to a single-family residential parcel to that which is charged to a nonresidential parcel. The ERU is determined by using the current best available method, which may include analyzing digital photographs, utilizing satellite imagery, performing field checks for verification purposes of a representative sample of single-family residences within the city limits and/or utilizing civil design and construction plans or record drawings. Using this methodology, the director shall determine the amount of impervious area on each nonresidential parcel. The city's standard ERU amount is 3,200 square feet of imperious surface area. The specific ERU calculation for each parcel will be rounded to the nearest one hundredth, will be established for each such parcel as the impervious surface information

becomes available for such parcel, and will be calculated in accordance with the following table:

Effective January 1, 2014:

Customer Class	Rate Calculation (1 ERU = 3,200 sq ft)	2014 Monthly Rate
Residential	1 ERU	~~$10.82~~
Nonresidential	(sq ft of impervious surface (1 ERU)	~~$10.82~~

Connection Charge	1 ERU	~~$98.84~~

Effective January 1, 2015:

Customer Class	Rate Calculation (1 ERU = 3,200 sq ft)	2015 Monthly Rate
Residential	1 ERU	$11.04
Nonresidential	(sq ft of impervious surface (1 ERU)	$11.04

Effective January 1, 2016:

Customer Class	Rate Calculation (1 ERU = 3,200 sq ft)	2016 Monthly Rate
Residential	1 ERU	$11.26
Nonresidential	(sq ft of impervious surface (1 ERU)	$11.26

Section 5. Effective Date. This Ordinance and the rate schedules provided herein shall be effective January 1, 2015 and whereas noted for rates effective in January 1, 2016.

PASSED by the City Council and APPROVED by the Mayor this 24th day of November, 2014.

CITY OF MARYSVILLE

By _____
JON NEHRING, Mayor

ATTEST:

By _____
City Clerk

Approved as to form:

By _____
GRANT K. WEED, City Attorney

Date of Publication: December 6, 2014

CITY OF MARYSVILLE
Marysville, Washington

ORDINANCE NO. 2905

AN ORDINANCE OF THE CITY OF MARYSVILLE, WASHINGTON, RELATING TO SEWER AND WATER CONNECTION CHARGES FOR COMMERCIAL, INDUSTRIAL AND MULTI-FAMILY RESIDENTIAL DEVELOPMENTS; AND AMENDING SECTION 14.07.010 OF MMC CHAPTER 14.07 FEES, CHARGES AND REIMBURSEMENTS TO PROVIDE AN OPTION FOR DEFERRING PAYMENT OF SEWER AND WATER CONNECTION CHARGES FOR COMMERCIAL, INDUSTRIAL AND RESIDENTIAL DEVELOPMENT, AND SETTING A SEWER AND WATER CONNECTION CHARGE FOR MULTI-FAMILY RESIDENTIAL DEVELOPMENT.

WHEREAS, in 2006, the City of Marysville economy, together with the State and national economies started to experience a severe economic downturn that remains today; and

WHEREAS, financing for construction projects has become harder to obtain as a result of the economic downturn; and

WHEREAS, the economic downturn has had an adverse effect on the housing, commercial and industrial markets; and

WHEREAS, reducing the amount of money needed for a construction loan will make construction loans more attainable; and

WHEREAS, the depressed real estate market has resulted in decreased revenues, abandonment of construction projects, and underutilized land in Snohomish County; and

WHEREAS, no new larger scale multifamily housing projects have been started in the City within the last decade; and

WHEREAS, it may take several months to years to achieve full occupancy of all units within a larger scale multifamily housing project or full lease on commercial/industrial space; and

WHEREAS, the City wishes to allow deferral of connection charges to commercial, industrial, and multifamily projects; and

WHEREAS, the Marysville Planning Commission held a public workshops on July 26, 2011, and January 10, 2012, on proposed changes to MMC 14.07.010 that would allow the deferral of connection charges to allow developers of commercial and industrial buildings and multifamily residential to defer payment of such fees to either occupancy or 18 months from the date of occupancy of the building if the property owner elects to retain ownership and not sell the property; and

WHEREAS, the Marysville Planning Commission held a public workshops on March 13, 2012, on proposed changes to MMC 14.07.010 that would reduce water and sewer connection charges for multifamily residential development for a limited time period; and

WHEREAS, the Marysville Planning Commission held a public hearing on September 13, 2011, April 24, 2012 and May 8, 2012 to consider the draft ordinance and amendment of MMC 14.07.010; and

WHEREAS, the City Council was briefed by City staff on July 2, 2012 and deliberated in an open public meeting on July 9, 2012 to consider the Planning Commission's recommendations and the proposed ordinance; and

WHEREAS, the Marysville City Council considered the entire hearing record including the written and oral testimony submitted during the Planning Commission's hearings, the Planning Commission's recommendation, and the written and oral testimony submitted during the council hearings; and

WHEREAS, after such consideration, the Marysville City Council wishes to amend MMC 14.07.010 to allow for the deferment of the payment of water and sewer connection charges associated with commercial and industrial buildings and multifamily residential to either occupancy or 18 months from the date of occupancy of the building if the property owner elects to retain ownership and not sell the property; and

WHEREAS, the Marysville City Council also desires to amend MMC 14.07.010 to lower the water and sewer connection charges for multifamily residential development; and

WHEREAS, the Marysville City Council desires that this deferred payment program for water and sewer connection charges and the reduction in water and sewer connection charges for multifamily residential development be effective for a three-year period and sunset after that.

NOW, THEREFORE, THE CITY COUNCIL OF THE CITY OF MARYSVILLE, WASHINGTON, DO ORDAIN AS FOLLOWS:

Section 1. Section 14.07.010 of MMC Chapter 14.07 Fees, Charges and Reimbursements is amended to read as follows:

14.07.010 Capital improvement charges.

(1) Capital improvement charges shall be assessed on all new connections to the water and sewer system. Capital improvement charges shall also be assessed for a remodel or expansion of an existing building or use. For purposes of this section, an "existing building or use" shall mean all commercial or industrial buildings or uses, churches, schools or similar uses, and all residential buildings or uses where a remodel or expansion increases the number of dwelling units. The capital improvement charge constitutes an equity payment by new and existing customers for a portion of the previously existing capital assets of the system. Capital improvement charges also constitute a contribution to a long-term capital

improvement program for the utility system which includes acquisition of new or larger water sources, construction of water storage and transmission facilities, and construction of sewer trunk lines and sewage treatment facilities. Capital improvement charges shall be paid in full before a new connection or expansion or remodel to an existing building or use shall be approved. All payments shall be deposited in the utility construction fund and shall be made prior to building permit issuance for residential construction and prior to issuance of a certificate of final occupancy for commercial/industrial construction.

(2) Deferral of Connection Charges Allowed.

(a) Payment of required connection charges may be deferred to final inspection for single family residential dwelling or multifamily projects with 25 or fewer units.

(b) Payment of required connection charges for a commercial building, industrial building, or a multifamily development exceeding twenty five (25) units may be deferred from the time of building permit issuance in accordance with the following;

(i). Fifty percent (50%) of the connection charges shall be paid prior to approved occupancy of the structure; and

(ii) The remaining fifty percent (50%) of the connection charges shall be paid within eighteen (18) months from the date of building occupancy, or when ownership of the property is transferred, whichever is earlier.

(c) The public works department shall allow an applicant to defer payment of the connection charges when, prior to submission of building permit application for subsection (a) or prior to final inspection for subsection (b), the applicant:

(i) Submits a signed and notarized deferred connection charge application together with a two hundred dollar ($200.00) processing fee and acknowledgement form for the development for which the property owner wishes to defer payment of the charges; and

(ii) With regard to payment deferment under subsection (b), records a lien for connection charges against the property in favor of the city in the total amount of all deferred connection charges for the development. The lien for connection charges shall:

(1) Be in a form approved by the city attorney; and

(2) Include the legal description, tax account number and address of the property.

(d) Upon receipt of final payment of all deferred charges for the development the director of the public works department shall execute a separate lien release for the property in a form approved by the city attorney. The property owner, at their expense, will be responsible for recording each lien release.

(e) In the event that the connection charges are not paid in accordance subsection (b), the city shall institute foreclosure proceedings in accordance with state law and as provided herein. In addition to any unpaid collection charges, the city shall be entitled to interest on the unpaid impact fees at the rate provided for in RCW 19.52.020 or as otherwise allowed by law and the reasonable attorney fees and costs incurred by the city in the foreclosure process. Notwithstanding the foregoing, prior to commencement of foreclosure, the City shall give not less than thirty (30) days written notice to the person or entity whose name appears on the assessment rolls of the county assessor as owner of the property via certified mail with return receipt requested and regular mail advising of its intent to commence foreclosure proceedings. If the connection charges are paid in full to the city within the thirty (30) day notice period, no attorney fees, costs and interest will be owed.

(f) In the event that the deferred connection charges are not paid in accordance with this section, and in addition to foreclosure proceedings provided in subsection (e), the city may initiate any other action(s) legally available to collect such connection charges.

(g) Compliance with the requirements of the deferral option shall constitute compliance with the conditions pertaining to the timing of payment of the connection charges.

(h) The deferred payment options set forth in this section shall automatically terminate three (3) years from the effective date of this ordinance without further action of the City Council.

(3~~2~~) The following capital improvement charges are established:

Residential Units

Connection Charges

Type of Connection		City Water	Outside Water	City Sewer	Outside Sewer
Residential					
Effective Date	1/1/2005	$3,675	$4,305	$3,120	$3,495
	1/1/2006	$4,750	$5,490	$4,490	$4,890
Multifamily Residential*					
Effective Date	8/1/2012 through 8/1/2015	$3,000	$5,490	$3,000	$4,890

*Residential living units including multi-unit housing, mobile homes and motels.

*The connection charges for multifamily residential development shall be in effect for a three (3) year period from August 1, 2012 through August 1, 2015. Thereafter, the connection charges for multi-family residential development shall be the same as the connection charges for residential development.

Commercial/Industrial

Connection Charges

Water

City

Effective Date	1/1/2005
0 – 2,000 gpm	$1.64/sf
2,001 – 4,000 gpm	$2.40/sf
4,001+ gpm	$3.16/sf

Outside City

Effective Date	1/1/2005
0 – 2,000 gpm	$1.99/sf
2,001 – 4,000 gpm	$2.87/sf
4,001+ gpm	$3.80/sf

25% rate reduction for automatic sprinkler system.

Sewer

City

Effective Date	1/1/2005
Retail Sales/Manufacturing/ Churches/Schools/Day Care	$1.03/sf
Offices/Medical/Dental/Nursing Homes and all other uses not listed	$1.67/sf
Warehouses/Storage	$0.49/sf
Restaurants/Taverns	$2.38/sf

25% rate reduction for schools without kitchens.

Outside City

Effective Date	1/1/2005
Retail Sales/Manufacturing/ Churches/Schools/Day Care	$1.24/sf
Offices/Medical/Dental/Nursing Homes and all other uses not listed	$2.00/sf
Warehouses/Storage	$0.65/sf
Restaurants/Taverns	$2.86/sf

Water Service Installation Fee

Effective Date	11/1/2006
5/8" x 3/4"	$1,050
3/4" x 3/4"	$1,075
1"	$1,200
1-1/2"	$1,600
2"	Time and materials costs/ minimum of $1,900

Drop-in Meter Fee

Effective Date	11/1/2006
5/8" x 3/4"	$500.00
3/4" x 3/4"	$525.00
1"	$560.00
1-1/2"	$750.00
2"	$850.00
3" and over	Charge time and material/ $3,500 minimum

Hotel/Motel Connection Charges

		City Water	Outside Water	City Sewer	Outside Sewer
Effective Date	1/1/2005	$1,405	$1,646	$1,193	$1,336
	1/1/2006	$1,816	$2,099	$1,717	$1,870

(4~~3~~) "Floor space" is defined as the net square footage measured from the interior walls, including interior partitions.

(5~~4~~) The capital improvement charges for sewer connections shall be reduced by $50.00 per unit or $0.045 per square foot when the affected property participated in a utility local improvement for the construction of the sewer main.

(6~~5~~) Capital improvement charges for sewer connections to commercial and industrial units shall be reduced by 50 percent for any floor space in the premises which is committed to being used as warehouse space for storage purposes only.

(7~~6~~) If the use of any premises connected to city utilities is converted from a residential occupancy to a commercial or industrial occupancy (as defined in subsection (2) of this section), or from a warehouse use to an active commercial or industrial use, the owner of the premises shall immediately report such conversion to the city and shall pay the extra capital improvement charge which is then required for such an occupancy. Failure to report such a conversion, and pay the extra charge, within 90 days of the new occupancy shall result in the extra charge being doubled as a penalty.

(8~~7~~) The capital improvement charge for utility connections in recreational vehicle parks shall be calculated as follows:

(a) For each connection to a recreational vehicle pad, the charge shall be 50 percent of the charge provided in subsection (2) of this section relating to residential living units.

(b) For every other connection in a recreational vehicle park, the charge shall be the same as provided in subsection (2) of this section for residential living units.

(9~~8~~) If a building with a lawful water and/or sewer connection to the city utility system is demolished and replaced with a new building requiring utility connections, the capital improvement charges assessed for the new connections shall be discounted by the amount which would have been paid, under current schedules, for the connections which previously served the demolished building.

Section 2. Severability. If any section, sentence, clause or phrase of this ordinance is held to be invalid or unconstitutional by the Growth Management Hearings Board (Board) or a court of competent jurisdiction, such invalidity or unconstitutionality shall not affect the validity or constitutionality of any other section, sentence, clause or phrase of this ordinance. Provided, however, that if any section, sentence, clause or phrase of this ordinance is held to be invalid by the Board or a court of competent jurisdiction, then the section, sentence, clause or phrase in effect prior to the effective date of this ordinance shall be in full force and effect for that individual section, sentence, clause or phrase as if this ordinance had never been adopted.

Section 3. Effective Date. This ordinance shall become effective five days after the date of its publication by summary.

PASSED by the City Council and APPROVED by the Mayor this 9th day of July, 2012.

CITY OF MARYSVILLE

By _____
JON NEHRING, MAYOR

ATTEST:

By _____
~~SANDY LANGDON~~, CITY CLERK
APRIL O'BRIEN Deputy

Approved as to form:

By _____
GRANT K. WEED, CITY ATTORNEY

Date of Publication: July 18, 2012

Effective Date (5 days after publication): July 23, 2012

W/M-12-041/Ord.sewer.water GKW 6.8.12 F

CITY OF MARYSILLE
Marysville, Washington

ORDINANCE NO. 3007

AN ORDINANCE OF THE CITY OF MARYSVILLE, CREATING A NEW CHAPTER 16.24 OF THE MARYSVILLE MUNICIPAL CODE (MMC) PROHIBITING OCCUPYING PROPERTIES THAT LACK ADEQUATE WATER OR SEWER SERVICE.

WHEREAS, adequate water and sewer service are necessary to assure proper sanitation, maintenance, and hospitable living conditions; and

WHEREAS, persons residing in conditions without proper sanitation or hospitable living conditions presents a risk to those persons' health, safety, and welfare, thereby creating a risk of harm to the public health, safety, and welfare; and

WHEREAS, properties which are not adequately maintained due to inadequate water or sewer facilities present a risk of harm to the public health, safety, and welfare; and

WHEREAS, since the economic downturn and recession there have been an increase in the number of vacant, abandoned, and foreclosed properties within the City; and

WHEREAS, many of these vacant, abandoned, and foreclosed structures have had water or sewer services discontinued but are occupied despite the lack of adequate water or sewer service resulting in a danger to the occupants and to the public health; and

WHEREAS, the City desires to assure that occupied properties have adequate water and sewer service to protect the public health, safety, and welfare, to require responsible parties to secure properties from occupancy until adequate water and sewer service is resumed, and to punish violations;

NOW, THEREFORE, THE CITY COUNCIL OF THE CITY OF MARYSVILLE, WASHINGTON, DO ORDAIN AS FOLLOWS:

Section 1. A new Chapter 16.24 MMC, Utility Service for Occupancy, is hereby created, as set forth in Exhibit "A."

Section 2. **Severability.** If any section, subsection, sentence, clause, phrase, or word of this ordinance should be held to be invalid or unconstitutional by a court of competent

jurisdiction, such invalidity or unconstitutionality thereof shall not affect the validity or constitutionality of any other section, subsection, sentence, clause, phrase, or word of this ordinance.

Section 3. **Effective Date.** This ordinance shall become effective five days after the date of its publication by summary.

PASSED by the City Council and APPROVED by the Mayor this 9 day of November, 2015.

CITY OF MARYSVILLE

By: _____
MAYOR JON NEHRING

Attest:

By: _____
April O'Brien, Deputy City Clerk

Approved as to from:

By: _____
Jon Walker, City Attorney

Date of publication: 11-14-15

Effective Date (5 days after publication): 11-19-15

EXHIBIT A

16.24.010 Purpose.

The purpose of this chapter is to protect the public health, safety, and welfare by assuring that people reside in conditions with adequate utilities and facilities to provide for proper sanitation, maintenance, and hospitable living conditions.

16.24.020 Definitions.

(1) "Building Official" means the Building Official of the City of Marysville or the Building Official's designee.

(2) "Civil Infraction" means a class one civil infraction as defined by chapter 7.80 RCW, the Infraction Rules for Courts of Limited Jurisdiction ("IRLJ") and any local rule adopted by the Marysville Municipal Court. Civil Infractions shall be heard by the Marysville Municipal Court.

(3) "Occupy" means (a) residing on the Premises or (b) being present on the Premises for any purposes other than actively maintaining or improving the Premises.

(4) "Person" means any natural person, legal entity, association, organization, corporation, or partnership and any agents, representatives, fiduciaries, or assigns.

(5) "Premises" means any land, real estate, tax parcel, or lot and any portion thereof whether improved or unimproved, including adjacent sidewalks and parking strips.

(6) "Responsible Person" means any Person having legal or equitable title or any interest in a Premises, including but not limited to owners, borrowers, and lenders. When there is more than one Responsible Person, both or all are responsible for performing any act required by this chapter and each may be charged with a violation of this chapter. However, it is a complete defense to any violation that the violation was remedied by another Responsible Persons.

(7) "Sewer Service" means either (a) a lawful, active, and functioning connection to the City's sanitary sewer system in conformance with Title 14 MMC or (b) a lawful, functioning, and adequately maintained "on-site sewage disposal system" (as defined in RCW 70.118.020(6)).

(8) "Water Service" means either (a) a lawful, active, and functioning connection to the City's water system in conformance with Title 14 MMC, (b) a lawful, functioning, and adequately maintained private well, or (c) a lawful, active, and functioning connection to a lawful, functioning, and adequately maintained "public water system" (as defined in RCW 70.116.030(3)).

16.24.030 Water and Sewer Required.

Any Premises within the City may only be Occupied by a person if the Premises has Sewer Service and Water Service.

16.24.040 Unlawful Occupancy.

(1) Occupying any Premises within the City which does not have Sewer Service and Water Service, as required by MMC 16.24.030, or which is posted "Unfit for Occupancy – No Trespassing" is a nuisance and a violation of this section.

(2) Removing or defacing a posted notice that a Premises is "Unfit for Occupancy – No Trespassing" is a violation of this section.

(3) A violation of this section is a misdemeanor.

16.24.050 Investigation and Enforcement Procedure.

(1) Investigation. Where the Building Official reasonably believes that a Premise does not have Sewer Service or Water Service for fourteen consecutive calendar days, the Building Official may issue and post a Notice of Violation. Unless appealed pursuant to MMC 16.24.060, the Notice of Violation becomes a final determination on the eleventh business day after the posting of the Notice at which time the Building Official shall post the Premises "Unfit for Occupancy – No Trespassing."

(2) Violation Notice. An enforcement action is commenced by a Notice of Violation. The Building Official shall post a copy of the Notice of Violation on the Premises and shall mail a copy of the Notice of Violation to the owner identified in the records of the Snohomish County Assessor and to the street address of the Premises. The Notice of Violation shall contain:

(a) Information identifying the Premises including the address and tax parcel number.

(b) A concise description of the basis for the Notice of Violation.

(c) A statement that the Premises must be vacated unless Sewer Service and Water Service are functioning within ten business days of posting the Notice of Violation.

(d) A statement that a Responsible Person may appeal the Building Official's determination to the Hearing Examiner by filing a written appeal setting forth the grounds for the appeal no later than ten business days after the Notice of Violation was posted.

(e) A statement that if the Building Official's determination is not appealed within ten business days of posting the Notice of Violation:

(i) The Notice of Violation will become a final determination;

(ii) That the Premises must be vacated and secured as provided in this chapter;

(iii) That any person Occupying the Premises will be liable as provided in this chapter; and

(iv) That any Responsible Person failing to secure the Premises will be liable as provided in this chapter.

(f) The date the Notice of Violation was posted on the Premises.

(g) The address where an appeal may be delivered to the City Clerk.

(h) A copy of this chapter must be attached to the Notice of Violation that is mailed to the Owner and the street address, but need not be attached to the Notice of Violation that is posted on the Premises.

16.24.060 Appeal.

A Responsible Person may appeal the Building Official's determination contained in a Notice of Violation by delivering a written appeal to the City Clerk. The written appeal must be received no later than ten business days after the Notice of Violation was posted on the Premises. If the City Clerk receives a timely written appeal, the Hearing Examiner shall set a hearing to be held within ten business days of receipt of the appeal.

(1) At any such hearing, the Responsible Person bears the burden, by a preponderance of the evidence, of establishing their standing as a Responsible Person.

(2) At any such hearing, the City bears the burden, by a preponderance of the evidence, of establishing that the Premises does not have adequate Sewer Service or Water Service as required by MMC 16.24.030 and that a person was Occupying the Premises as of the date of the Notice of Violation.

(3) Any such hearing does not need to comply with the rules of evidence and the Hearing Examiner may consider evidence which the Hearing Examiner determines is reasonably reliable.

(4) The Hearing Examiner shall issue a written decision within five business days of any such hearing. The written decision shall make findings of fact and conclusions of law. If the Hearing Examiner determines that the Premises does not have Sewer Service or Water Service as required by MMC 16.24.030 and that a person was Occupying the Premises as of the date of the Notice of Violation, then the Premises must be vacated and secured within five business days of the Hearing Examiner's decision. The Hearing Examiner's decision is a final determination upon being signed and mailed.

(5) The decision of the Hearing Examiner may be appealed to the Snohomish County Superior Court within 21 calendar days.

16.24.070 Vacant Structure Must be Secured Upon Violation.

(1) Upon a final determination that a Premises has been Occupied in violation of MMC 16.24.040, every structure on the Premises must be secured from unlawful Occupancy as specified in MMC 16.24.080 within five business days.

(2) It is a nuisance and is a violation of this section for any Responsible Person for any Premises within the City to fail to secure every structure on the Premises from unlawful Occupancy as specified in MMC 16.24.080 within five business days of a final determination that the Premises has been Occupied in violation of MMC 16.24.040.

(3) Violation of this section is a Civil Infraction and upon a finding that a violation has been committed, the person committing the act shall be assessed an amount not to exceed $250 plus applicable statutory assessments. Such penalty is in addition to any other remedies or penalties specifically provided by law. For each act herein prohibited of a continuing nature, each day shall be considered a separate offense.

(4) Each day that a structure on the Premises is not secured as specified in MMC 16.24.080 is a separate violation and the Building Official may issue a Civil Infraction to any Responsible Person who had notice that the structure was required to be secured.

16.24.080 Standards for Securing Structures.

All structures which must be secured under this chapter shall meet the following standards.

(1) Exterior openings shall be properly secured with doors, shutters, grills, and window glazing. Where the normal structural amenities are damaged, destroyed or significantly deteriorated such that the structure becomes unsecure the amenities shall be replaced or the openings may be secured with structural paneling or medium density overlay. At a minimum, all exterior openings accessible from grade shall be properly secured to prevent unauthorized third party entry.

(2) Personal property and miscellaneous debris which may constitute a fire hazard must be removed from the structure prior to securing the structure.

(3) If the structure has automatic fire sprinkler systems or fire alarm systems, the systems shall be maintained in an operable condition at all times.

(4) Sewer lines shall be capped or closed with an appropriate plug.

(5) All structures on the Premises shall be posted "Unfit for Occupancy – No Trespassing."

(6) The Responsible Person shall periodically assure that the Premises is inspected and timely take any actions necessary to assure compliance with these standards.

16.24.090 Abatement.

(1) If a Responsible Person fails to secure every structure on the Premises from unlawful Occupancy as specified in MMC 16.24.080 within five business days after a final determination, the Building Official may take immediate action to cause the building to be secured in a manner consistent with this chapter.

(2) In the event that the City secures the building, all costs incurred shall be assessed to the owner of the Premises as provided in Chapter 4.02 MMC.

(3) In securing a structure, the Building Official is not required to satisfy all the conditions of MMC 16.24.080 and in the Building Official's sole discretion may determine what measures are appropriate.

(4) If the City secures a structure pursuant to this chapter, the Responsible Person shall remain responsible for the inspection, maintenance, and protection of the Premises and any structures on the Premises.

16.24.100 Re-Occupancy.

Following a final determination that the Premises has been Occupied in violation of this chapter, the Premises may only be Occupied after a Responsible Person provides the Building Official with satisfactory evidence that the Premises complies with the requirements of MMC 16.24.030 and receives written approval from the Building Official that Occupancy of the Premises is allowed.

ORDINANCE NO. 788

AN ORDINANCE OF THE CITY OF MARYSVILLE PROHIBITING CROSS-CONNECTIONS AND PROVIDING FOR BACK FLOW PREVENTION DEVICES AND PROVIDING FOR DISCONTINUANCE OF SERVICE FOR VIOLATIONS

WHEREAS, the Department of Social and Health Services, State of Washington, has enacted certain rules and regulations requiring municipalities to regulate and control cross-connections, utilize back flow devices and prevent possible contamination of the public water systems; and

WHEREAS, the purpose of this Ordinance is to protect the health of water consumers by the control of actual and/or potential cross-connections through two basic programs.

A. Through proper installation and surveillance of back flow prevention devices on service lines leading to premises where cross-connection exists, or are likely to occur, and

B. Through inspection and regulation of plumbing within premises to minimize the danger of contamination of water systems on these premises or the public water supply itself and such is in the best interests of the City of Marysville,

NOW, THEREFORE, THE CITY COUNCIL OF THE CITY OF MARYSVILLE DO ORDAIN as follows.

Section 1. Any customer, regardless whether residing within or without the City limits of the City of Marysville, which is now receiving water from the Marysville Water System or who will in the future receive water from the City of Marysville, shall comply with the rules and regulations contained in this ordinance.

Section 2. For the purpose of this ordinance, "customer" is any person, family, business, corporation, partnership or firm

connected to the City of Marysville Water Supply.

Section 3. In addition, any water district, municipal organization or other organization which is connected to the Marysville Water Supply for water and/or which is furnished to people or members within said district or organization, shall cause all the people or members within said district or organization as well as the district or organization itself to comply with the rules and regulations contained in this ordinance.

Section 4. These regulations are to be reasonably interpreted. It is their intent to recognize the varying degrees of hazard and to apply the principle that the degree of protection should be commensurate with the degree of hazard.

Section 5. As used in this ordinance, unless the context states otherwise, the following definition shall apply.

(A) Air gap separation means the unobstructed vertical distance through the free atmosphere between the lowest opening from any pipe or faucet supplying water to a tank, plumbing fixture, or other device and the flood level rim of the receptacle, and shall be at least double the diameter of the supply pipe measured vertically above the flood level rim of the vessel. In no case shall the gap be less than one inch.

(B) Auxiliary supply means any water source or system, other than the public water supply, that may be available in the building or premises.

(C) Back flow means the flow other than the intended direction of flow, of any foreign liquids, gases, or substances into the distribution system of a public water supply.
(1) Back pressure means back flow caused by a pump, elevated tank, boiler, or other means that could create pressure within the system greater than the supply pressure.
(2) Back siphonage means a form of back flow due to a negative or subatmospheric pressure within a water system.

(D) Back flow prevention device, means a device to counteract back pressures or prevent back siphonage.

(E) Cross-connection means any physical arrangement whereby a public water supply is connected, directly or indirectly, with any other water supply system, sewer, drain, conduit, pool, storage reservoir, plumbing fixture, or other device which contains, or may contain, contaminated water, sewage, or other waste or liquid of unknown or unsafe quality which may be capable of imparting contamination to the public water supply as a result of back flow. Bypass arrangements, jumper connections, removable sections, swivel or change-over devices, and other temporary or permanent devices

through which, or because of which, back flow could occur are considered to be cross-connections.

(F) Double check valve assembly, means an assembly composed of two single, independently acting check valves, including tightly closing shutoff valves located at each end of the assembly and suitable connections for testing the watertightness of each check valve.

(G) Reduced pressure principle back flow prevention device means a device incorporating two or more check valves and an automatically operating differential relief valve located between the two checks, two shutoff valves, and equipped with necessary appurtenances for testing The device shall operate to maintain the pressure in the zone between the two check valves, less than the pressure on the public water supply side of the device. At cessation of normal flow, the pressure between the check valves shall be less than the than the supply pressure. In case of leakage of either check valve the differential relief valve shall operate to maintain this reduced pressure by discharging to the atmosphere. When the inlet pressure is two pounds per square inch or less the relief valve shall open to the atmosphere thereby providing an air-gap in the device.

Section 6. CROSS-CONNECTIONS PROHIBITED

(A) Except as provided in Section 7, all cross-connections as above defined, whether or not such cross-connections are controlled by automatic devices, such as check valves or by hand-operated mechanisms such as a gate valve or stop cocks, are prohibited.

(B) Failure on the part of persons, firms, or corporations to discontinue the use of any and all cross-connections and to physically separate such cross-connections will be sufficient cause for the discontinuance of the public water service to the premises on which the cross-connection exists.

(C) The purveyor shall, in cooperation with the health officer or the local plumbing inspection authority, make periodic inspections of premises served by the water supply to check for the presence of cross-connections. Any cross-connections found in such inspection shall be ordered removed by the responsible agency. If an immediate hazard to health is caused by the cross-connection, water service to the premises shall be discontinued until it is verified that the cross-connection has been removed.

Section 7. USE OF BACKFLOW PREVENTION DEVICES

(A) Backflow prevention devices shall be installed at the service connection or within any premises where in the judgment of the purveyor or the secretary the nature and extent of activities on the

premises, or the materials used in connection with the activities, or materials stored on the premises would present an immediate and dangerous hazard to health should a cross-connection occur, even though such cross-connection does not exist at the time the backflow prevention device is required to be installed. This shall include but not be limited to the following situations

(1) Premises having an auxiliary water supply, unless the quality of the auxiliary supply is in compliance with WAC 248-54-430 of the rules and regulations of the State Board of Health, three copies of which are on file with the City Clerk.

(2) Premises having internal cross-connections that are not correctible, or intricate plumbing arrangements which make it impracticable to ascertain whether or not cross-connections exist.

(3) Premises where entry is restricted so that inspections for cross-connections cannot be made with sufficient frequency or at sufficiently short notice to assure that cross-connections do not exist.

(4) Premises having a repeated history of cross-connections being established or re-established.

(5) Premises on which any substance is handled under pressure so as to permit entry into the public water supply, or where a cross-connection could reasonably be expected to occur. This shall include the handling of process waters and cooling waters.

(6) Premises where materials of a toxic or hazardous nature are handled such that if back siphonage should occur, a serious health hazard may result.

(7) The following types of facilities will fall into one of the above categories where a backflow prevention device is required to protect the public water supply. A backflow prevention device shall be installed at these facilities as set forth herein unless the City and the secretary determines no hazard exists.

(a) Hospitals, mortuaries, clinics
(b) Laboratories
(c) Piers and docks
(d) Sewage treatment plants
(e) Food or beverage processing plants
(f) Chemical plants using a water process.
(g) Metal plating industries
(h) Petroleum processing or storage plants
(i) Radioactive material processing plants or nuclear reactors
(j) Others specified by the secretary

(B) The type of protective device required herein shall depend on the degree of hazard which exists as follows

(1) An air-gap separation or a reduced pressure principle backflow prevention device shall be installed where the water supply may be contaminated with sewage, industrial waste of a toxic nature or other contaminant which would cause a health or system hazard.

(2) In the case of a substance which may be objectionable but not hazardous to health, a double check valve assembly, air-gap separation or a reduced pressure principle backflow prevention device shall be installed.

(C) Backflow prevention devices required in this section shall be installed at the meter, at the property line of the premises when meters are not used, or at a location designated by the secretary or City. The device shall be located so as to be readily accessible for maintenance and testing, and where no part of the device will be submerged.

(D) Backflow prevention devices required in this section shall be installed under the supervision of, and with the approval of, the City.

(E) Any protective device required in this section shall be a model approved by the secretary. A double check valve assembly or a reduced pressure principle backflow prevention device will be approved if it has successfully passed performance tests of the University of Southern California Engineering Center or other testing laboratories satisfactory to the secretary.

(F) Backflow prevention devices installed under this section shall be inspected and tested annually, or more often where successive inspections indicate repeated failure. The devices shall be repaired, overhauled, or replaced whenever they are found to be defective. Inspections, tests and repairs and records thereof shall be done under the City's supervision.

Section 8. Failure of any customer or any district organization to cooperate in the installation, maintenance, testing or backflow prevention device or the requirements of an air-gap separation shall be grounds for the termination of the water services at a point where such flow, which is to be terminated by the City of Marysville, would best prevent possible contamination of the public water supply.

Section 9. This Ordinance shall take full force and effect five (5) days following its enactment and publication as required by law.

PASSED by the City Council of the City of Marysville this 26 day of December, 1972.

CITY OF MARYSVILLE

By Glenn Frank
Mayor

ATTEST:

Shirley Hester
City Clerk

APPROVED AS TO FORM

Mark E. Delaney
City Attorney

APPENDIX S

Drought Response Plan

CITY OF MARYSVILLE

2001 DROUGHT RESPONSE PLAN
(10-8-01)

OBJECTIVE

In order to conserve the available water supply and protect the integrity of its water system, with particular regard for domestic water use, sanitation and fire protection, and to protect and preserve public health, welfare, and safety and minimize the adverse impacts of water supply shortage or water supply emergency conditions, the City of Marysville hereby adopts the following Drought Response Plan (DRP).

It is important that the City of Marysville initiate this Drought Contingency Plan to manage available water resources and ensure that sufficient water is available to maintain water pressure, fire fighting supply, drinking and sanitation requirements.

OVERVIEW

Droughts are naturally occurring but unpredictable weather events of varying frequency, duration and severity. In the Marysville Water Service Area (MWSA), there is a low probability of a multi-year drought, but unusual weather events can cause short-term shortages by affecting the annual refill and drawdown of the Everett Spada Reservoir and the Marysville Well sites. This can occur in one or more of the following ways:

- A dry fall and/or winter can disrupt the refill cycle, which normally replenishes the Spada Reservoir and the Stillaguamish River.
- A less than normal winter snowpack can limit the volume of flows from snowmelt in the spring to refill Spada Reservoir and can lower the ground water supply at the various city well sites .
- Unusually warm and dry spring weather can cause an early melting of the snowpack and an early filling and draw-down of Spada Reservoir.
- Unusually warm and dry summer weather can significantly increase peak summer season demands and the draw-down Spada reservoir and can effect the ground water supply at other locations.

These same scenarios can affect the Stillaguamish Ranney Well located on the Stillaguamish River near Arlington and the Edward Springs Reservoir near Lakewood. Both depend on a ground water supply to provide adequate water north of 128th in Marysville.

The DRP identifies the range of demand reduction actions that are available and defines the mechanism(s) by which decisions will be made during a drought event. Since each drought situation has unique characteristics, the DRP cannot address all scenarios, or all of the supply and demand management actions that might be appropriate to a given situation. As a result, the

DRP is a general framework of actions that will be tailored to meet the specific needs of drought-related supply situation.

In addition to meeting the needs of the City and its water customers, the DRP is designed to achieve the goal of providing an adequate quantity of high quality water throughout a drought event.

DATA NEEDS

The DRP provides a blueprint for managing a drought situation to forestall a worsening drought-related supply condition. For the DRP to be effective, it is critical to establish a channel of clear, timely, and specific information on the supply conditions early in the process. At a minimum, this information should include:

- Regular updates on the level of Spada Reservoir and the ground water supply at Edward Springs, the Ranney Well site or other City water sources.
- Weather and precipitation forecasts from the Climate Prediction Center and Northwest River Forecast Center.
- Water demand forecasts identifying normal consumption levels and projected consumption patterns based on historical data for previous drought periods.

COORDINATION

The City of Everett water supply system provides water to the majority of Snohomish County through contracts with wholesale water customers, or purveyors. The City of Marysville provides water from two major sites north of 128th Ave. Given this relationship, drought management actions must be implemented throughout the water purveyors area of responsibility to be effective. Regionally consistent actions are important for a number of reasons:

- A unified message and approach is easier to communicate to the public and easier for the public to understand.
- Public support and cooperation is likely to be higher if drought management actions are equitable throughout the purveyors area of responsibility.
- It is easier to forecast and manage demand if drought management actions are consistent throughout the region.

DRP STAGES

Data from other water utilities that have faced drought situations indicates that customers prefer the opportunity to meet targeted demand reductions through voluntary actions before mandatory restrictions are put in place. As a result, the DRP provides a four-stage approach to dealing with a drought event. Each stage provides an increasingly aggressive set of actions that will be implemented as drought conditions become more severe.

The four stages of the DRP include a variety of communications, internal operating adjustments, and supply and demand management strategies. These stages are characterized as follows:

- Advisory Stage – The public is informed that a water shortage may occur and is encouraged to use water wisely.
- Voluntary Stage – This stage relies on voluntary cooperation to meet demand-reduction goals. During this stage, the City and its purveyors will implement supply-side actions and recommend voluntary actions for their retail customers.
- Mandatory Stage – During this stage, the City and its purveyors will implement more aggressive supply-side actions and will limit or prohibit certain retail water use activities.
- Emergency Stage – If supply conditions worsen and the mandatory stage does not meet the required demand reduction, this stage will establish emergency restrictions, which may include rate surcharges.

Recommendations for implementing the four stages of the DRP will be made to the City's Public Works Director by a Drought Advisory Committee which will be formed, if needed, at the direction of the Public Works Director. The Drought Advisory Committee will be composed of:

- two (2) representatives from the City's Public Works Department,
- one (1) representative from the City's Parks Department,
- one (1) representative from the City's Facilities Department,
- one (1) representative from the City's Administration Group,

STAGE 1 - ADVISORY

The Advisory Stage will be triggered by two primary conditions:

- Spada Reservoir storage is less than 80 percent of normal operating capacity as of April 1, due to exceptionally low precipitation, and/or carryover storage from the previous year.
- The snowpack and inflows that feed Spada Reservoir are less than 80 percent of normal levels as of April 1.

The Advisory Stage will focus on external communications. The City will inform wholesale and retail customers that the potential exists for a future water shortage. This message will include the following basic elements:

- There is a lower than normal supply of water in the Spada reservoir or City well sites.
- The conditions may return to normal, but it is too early to tell.
- If the conditions don't improve, additional steps may have to be taken to reduce water consumption.
- Customers are encouraged to use water wisely to avoid the possibility of more stringent actions.

In addition to advising customers about the potential of water shortage, the Advisory Stage will prompt a number of actions:

- The Drought Advisory Committee may be assembled to monitor the situation and assign responsibilities.
- Data collection (e.g., stream flows, snowpack conditions, weather forecasts, reservoir levels well sounding levels) and computer modeling of projected supply, demand and storage will be intensified.
- The City will develop a fact sheet that outlines the water situation for water system customer service staff throughout the MWSA.
- Planning and preparation for the Voluntary Stage will be initiated including an assessment of staffing impacts, training needs, and communication strategies.
- The City may consider the need for a rate surcharge to promote water conservation.

STAGE 2 – VOLUNTARY

The Voluntary Stage will be triggered by two primary conditions:

- Spada Reservoir storage is not projected to be at standard operating capacity as of June 1, due to an exceptionally low snowpack, precipitation, and/or carryover storage from the previous year.
- Spada Reservoir storage and predicted inflows are at, or below, 75 percent of normal levels and indicate the need for a more systematic response to the water supply situation.
- City Well sites drop below 75 percent of normal levels.

The Voluntary Stage will be a call to action. The City should inform wholesale and retail customers that water supply conditions have not improved and that their help is needed to reduce water consumption. This message will include the following elements:

- The water supply in Spada reservoir continues to be lower than normal and ground water supply sounding show a significant decline.
- There is a reasonable probability that the conditions will not return to normal.
- Water purveyors in the MWSA are taking steps to limit water use.
- Customers are encouraged to voluntarily reduce demand to avoid the need for more stringent actions in the future.

In the Voluntary Stage, the City and its purveyors will implement a number of water-saving steps and will ask retail customers to limit certain specific water-related activities. These actions are shown in Figure 1:

FIGURE 1: Stage 2 Voluntary Actions

City/Purveyor Actions	Retail Customer Actions
• Limit all non-essential domestic uses of water	• Limit all non-essential domestic uses of water
• Limit landscape irrigation around public facilities.	• Limit car washing, driveway cleaning, and pressure washing.
• Limit irrigation of parks and median/gateway areas.	• Limit irrigation of residential gardens and lawns.
• Limit street washing and other non-essential services	• Limit irrigation of golf fairways and cemeteries.
• Limit the frequency of water system flushing activities.	• Limit recreational uses of water.

In addition to promoting voluntary water conservation, the Voluntary Stage may prompt a number of other actions:

- The Drought Advisory Committee will begin meeting on a regular basis to coordinate internal and external actions.
- Systematic communications should be established with elected officials throughout the EWSA.
- A communications plan will be developed and implemented to keep customers informed about the water situation, promote conservation strategies, and encourage behavioral changes.
- Watering (irrigation) guidelines will be established and communicated to the City's wholesale and retail customers.
- Planning and preparation for the Mandatory Stage will be initiated including an assessment of staffing impacts, training needs, and communication strategies.
- The City and/or its purveyors may implement a rate surcharge to promote water conservation.

STAGE 3 – MANDATORY

The Mayor of the City of Marysville will authorize progressing to Mandatory Stage based on the recommendations of the Drought Advisory Committee. This will be triggered by two primary conditions:

- Supply conditions have become progressively more serious, this trend is expected to continue or worsen, and the goals established in the Voluntary Stage have not been achieved.
- Supply modeling indicates that demand levels must be reduced by specific, quantifiable levels to avoid serious impacts on the ability to meet essential water needs in the future. Supply modeling indicates that expected demands may not be met if this trend continues

The Mandatory Stage will identify specific water conservation actions customers are required to take. The City will inform its wholesale and retail customers that voluntary actions have not been successful and that restrictions must be imposed to address the water shortage situation. This message will include the following elements:

- The water supply in Spada reservoir and/or City wells are lower than normal and is unlikely to return to normal conditions.
- The voluntary approach has not resulted in the necessary savings.
- Water purveyors in the MWSA are instituting water restrictions to ensure that there is an adequate supply throughout the duration of the shortage period.
- Customers are instructed to eliminate certain water-use activities to avoid more stringent measures in the future.
- Water purveyors will be implementing an enforcement plan to monitor water use and address violations.

In the Mandatory Stage, the City and its purveyors will eliminate all non-essential uses of water and will ask retail customers to eliminate a variety of water-related activities. These actions are shown in Figure 2:

FIGURE 2: Stage 3 Mandatory Actions

City/Purveyor Actions	Retail Customer Actions
• Eliminate all non-essential services and uses of water	• Eliminate all non-essential domestic uses of water
• Eliminate landscape irrigation around public facilities.	• Eliminate washing cars, spray cleaning, and pressure washing.
• Eliminate irrigation of parks and median/gateway areas.	• Eliminate irrigation of residential gardens and lawns.
• Eliminate non-essential system flushing activities.	• Eliminate irrigation of golf fairways and cemeteries.
• Eliminate non-essential sewer flushing activities.	• Eliminate all recreational uses of water.
• Restrict Fire Department training activities.	• Reduce commercial uses of water to prescribed levels.
• Limit water sales outside the normal service area	• Reduce process water usage to prescribed levels.

In addition to prescribing mandatory conservation actions, the Mandatory Stage will prompt a number of other actions:

- Water purveyors in the MWSA will be assigned a percent reduction goal they are required to achieve.

- A communications plan will be developed and implemented to inform customers about the severity of the water situation and to publicize the restrictions.
- An enforcement plan will be developed that defines the enforcement mechanism(s), identifies staffing and management of the enforcement process, and defines procedures for dealing with violators.
- A policy will be developed for granting water restriction exemptions that identifies the exemption criteria, an application procedure, and the evaluation/determination process.
- Planning and preparation for the Emergency Stage will be initiated including an assessment of staffing impacts, training needs, and communication strategies.

STAGE 4 – EMERGENCY

The likelihood of the Emergency Stage is extremely remote and no drought-related emergency has occurred in the history of the City. The Emergency Stage identifies actions that will be taken only when a shortage of water for public health and safety is imminent. This stage is characterized by two things. First, increasingly stringent restrictions will be established and enforced. Second, significant rate surcharges may be implemented to reduce consumption.

The City will inform its wholesale and retail customers that all previous actions have not been successful and that emergency restrictions must be imposed to address the water shortage. This message will include the following elements:

- The water shortage problem is severe and has become a public emergency.
- All non-essential uses of water must be eliminated.
- Taste and odor water quality problems may occur due to system-wide reductions of water consumption and system flushing.
- Water pressure problems may occur throughout the water system.
- There will be increased enforcement of the water-use restrictions and violators will be fined.
- The City and/or purveyors may implement a rate surcharge.

Given the unique nature of the Emergency Stage, a list of actions will be developed by the Drought Advisory Committee based on the characteristics of the water shortage event.

APPENDIX T

Agency Review Comments